NASA/TP–2006–213725

Crew Station Aspects of Manned Spacecraft

Volume 1

Jerry Goodman
Lyndon B. Johnson Space Center
Houston, Texas

October 2006

THE NASA STI PROGRAM OFFICE . . . IN PROFILE

Since its founding, NASA has been dedicated to the advancement of aeronautics and space science. The NASA Scientific and Technical Information (STI) Program Office plays a key part in helping NASA maintain this important role.

The NASA STI Program Office is operated by Langley Research Center, the lead center for NASA's scientific and technical information. The NASA STI Program Office provides access to the NASA STI Database, the largest collection of aeronautical and space science STI in the world. The Program Office is also NASA's institutional mechanism for disseminating the results of its research and development activities. These results are published by NASA in the NASA STI Report Series, which includes the following report types:

- TECHNICAL PUBLICATION. Reports of completed research or a major significant phase of research that present the results of NASA programs and include extensive data or theoretical analysis. Includes compilations of significant scientific and technical data and information deemed to be of continuing reference value. NASA's counterpart of peer-reviewed formal professional papers but has less stringent limitations on manuscript length and extent of graphic presentations.

- TECHNICAL MEMORANDUM. Scientific and technical findings that are preliminary or of specialized interest, e.g., quick release reports, working papers, and bibliographies that contain minimal annotation. Does not contain extensive analysis.

- CONTRACTOR REPORT. Scientific and technical findings by NASA-sponsored contractors and grantees.

- CONFERENCE PUBLICATION. Collected papers from scientific and technical conferences, symposia, seminars, or other meetings sponsored or cosponsored by NASA.

- SPECIAL PUBLICATION. Scientific, technical, or historical information from NASA programs, projects, and mission, often concerned with subjects having substantial public interest.

- TECHNICAL TRANSLATION. English-language translations of foreign scientific and technical material pertinent to NASA's mission.

Specialized services that complement the STI Program Office's diverse offerings include creating custom thesauri, building customized databases, organizing and publishing research results . . . even providing videos.

For more information about the NASA STI Program Office, see the following:

- Access the NASA STI Program Home Page at http://www.sti.nasa.gov

- E-mail your question via the internet to help@sti.nasa.gov

- Fax your question to the NASA Access Help Desk at (301) 621-0134

- Telephone the NASA Access Help Desk at (301) 621-0390

- Write to:
  NASA Access Help Desk
  NASA Center for AeroSpace Information
  7121 Standard
  Hanover, MD 21076-1320

NASA/TP–2006–213725

Crew Aspects of Manned Spacecraft

Volume 1

Jerry Goodman
Lyndon B. Johnson Space Center
Houston, Texas

October 2006

Available from:

NASA Center for AeroSpace Information
7121 Standard Drive
Hanover, MD 21076-1320
301-621-0390

National Technical Information Service
5285 Port Royal Road
Springfield, VA 22161
703-605-6000

This report is also available in electronic form at http://ston.jsc.nasa.gov/collections/TRS/

CREW STATION ASPECTS OF MANNED SPACECRAFT DESIGN

BY

JERRY RONALD GOODMAN
B.S.M.E., Purdue University, 1958

THESIS

Submitted in partial fulfillment of the requirements
for the degree of Master of Science in Industrial Engineering
in the Graduate College of the
University of Illinois at Urbana-Champaign, 1972

Urbana, Illinois

629.471
G622c
Engineering

UNIVERSITY OF ILLINOIS AT URBANA-CHAMPAIGN

THE GRADUATE COLLEGE

January, 1972

I HEREBY RECOMMEND THAT THE THESIS PREPARED UNDER MY SUPERVISION BY JERRY RONALD GOODMAN

ENTITLED CREW STATION ASPECTS OF MANNED SPACECRAFT DESIGN

BE ACCEPTED IN PARTIAL FULFILLMENT OF THE REQUIREMENTS FOR THE DEGREE OF MASTER OF SCIENCE

Bruce A. Hertig
In Charge of Thesis

Head of Department

Recommendation concurred in†

Committee on Final Examination†

† Required for doctor's degree but not for master's.

D517

APR 28 1972

ACKNOWLEDGMENTS

This thesis was made possible by a NASA-Manned Spacecraft Center graduate program for a Master of Science degree in Industrial Engineering. I appreciate NASA's sponsorship and aid in obtaining the photographs and artwork which appear in this thesis.

Much of the material included in this thesis are from NASA sources or documents and my years of experience with NASA. This thesis represents my views and opinions as a result of this experience and does not in any way represent NASA's official position or viewpoint.

Special thanks to Richard S. Johnston of NASA, who strongly supported my desire to do graduate work and to write a thesis of this nature. I also wish to thank Joseph P. Loftus, Aaron Cohen, and Stanley Goldstein, also of NASA, for their support in achieving this effort. I am especially grateful to Mr. Loftus, who was a teacher and mentor during my work on the Apollo Program. The liaison support of Miss Jeanie Walker of NASA has been significant and greatly aided me in assemblying materials for this thesis.

I also wish to acknowledge and express appreciation for the helpful advice and suggestions of my advisor, Dr. Bruce A. Hertig. The advice and suggestions of Dr. Robert C. Williges of the Department of Psychology were also helpful and appreciated.

Finally, I wish to thank my wife Sally for her understanding, support, and patience during the time I was "pregnant" with this thesis.

TABLE OF CONTENTS

Page

INTRODUCTION..... 1

Crew Station Design..... 2
Preview of Thesis Contents..... 5

CHAPTER

I CREW STATION DESIGN/DEVELOPMENT: CONTROL AND MANAGEMENT..... 36

Crew Station Integration Organization..... 36

General Contract Effort..... 37
General NASA and S/C Contractor Responsibilities..... 38
Specific S/C Contractor Responsibilities..... 41
Flight Crew Support Teams..... 44
S/C Contractor Support Teams..... 45

Design Requirements and Configuration Control..... 46

S/C Design Requirements Documentation..... 46
S/C Configuration Control..... 61
S/C to GFE Interface Configuration Control..... 82

S/C Development and Configuration Reviews.....114

Mockup Utilization.....115
Flight Crew Participation.....122
Crew Station Review Perspective.....126
Preliminary Design Reviews.....151
Critical Design Reviews.....164
Crew Compartment Stowage Reviews.....167
S/C Bench Layout Reviews.....176
Crew Compartment Fit and Function/Crew Equipment Interface Test.....177
Other Crew Station Reviews.....180

II GENERAL INTERNAL CREW STATION LAYOUT/CONFIGURATION REQUIREMENTS.....186

Total Crew Functional Volume.....186
General Equipment Arrangement, Stowage/Compartment Layout, and Habitability.....198

Page

Basic Factors..... 198
Habitability..... 201
Equipment and Stowage Arrangement..... 203
Task Analysis and Detailed Requirements..... 205

Crew Size/Anthropometry, Mobility, and Visibility Requirements..... 206

Crew Size/Anthropometric Criteria for Spacecraft Design..... 206
Clothing Effects on Size..... 231
Suit and Suited Capabilities..... 231

Crew Compartment Closeout Provisions..... 257

Closeout Panels or Provisions..... 257
Debris/Equipment Traps and Nets..... 261
Wire/Tubing Protection..... 265

Windows..... 266

Current S/C Use/Design..... 266
General Functions and Requirements..... 271

Sharp Edges, Corners, and Protrusion Hazards..... 279

Basic Factors..... 279
Recommended Criteria..... 283

III RECOMMENDATIONS AND CONCLUSIONS..... 297

BIBLIOGRAPHY..... 301

APPENDICES..... 307

INTRODUCTION

Considerable manpower, money, design ingenuity and modification were involved in the Apollo Command Module (CM) and Lunar Module (LM) crew station designs, with their many man-machine interfaces and systems requirements.

Crew station, as used here, is defined as the crew compartment, spacecraft (S/C) interior cabin, and all other areas which a crewman interfaces, or may potentially interface. It includes the hardware which a crewman uses, operates, monitors, or which is required to support or sustain his activities. Where extravehicular activity (EVA) is a design requirement, the crew station consists of the crew-S/C interface and any additional support hardware. The crew station also includes the man-machine operations and interactions required to satisfy design, systems, or mission requirements/goals. The physical interaction the crewman has with S/C couches, rest or sleep stations, and all types of equipment are, in effect, examples of substations which constitute the S/C's crew station. The crew station development involves integration of various S/C systems and subsystems with the human operator, systems and detailed design engineering, anthropometry, and other technical efforts related to human factors.

Included at the end of this section, are figures and photos which generally illustrate the makeup of the crew stations of various S/C. Depicted are the Mercury, Gemini, Apollo CM and LM S/C, as well as the Russian Vostok, Voskhod, Soyuz, and Salyut. This information shows the configurations of current S/C crew stations, and serves as a reference to material presented later in the text.

Crew Station Design

The design of spacecraft interior crew station had as its predecessors the designs of aircraft cockpits, automobile interiors, submarines, and other moderately enclosed or confined living quarters or work stations. Design of S/C crew stations differs from these predecessors in numerous ways. The primary function of a crew station is to provide an arrangement of controls, displays, and other essential monitoring and support provisions to ensure adequate and safe performance of mission tasks and goals. These tasks are significantly more complex, demanding in training and time-on-task, and more time-critical on the whole than other systems. This is especially true in later space programs, where man played a more active role in S/C operations. Missions up to the present Apollo generation have required a S/C which is autonomous relative to onboard power, provision for expendables, and equipment and maintenance. High systems reliability, as well as individual hardware reliability, are essential to assure crew and mission safety, and to minimize interference with crew performance and mission timeline. The hardware for monitoring and active control functions required to fly missions occupies, for the most part, the critical portions of the on-duty work station. These instruments must be visually and physically accessible.

W. J. North suggested that spacecraft cockpit design and control philosophy are similar to that used for aircraft, since man's performance in space was initially shown to be the same as in aircraft.[1] A wide variety of other equipment and provisions must be carried onboard to support mission tasks,

---

[1] W. J. North, "Crew Station Design and Operation," in Manned Spacecraft: Engineering Design and Operation, Paul E. Purser, Maxime A. Faget, and Norman F. Smith (eds.) (New York: Fairchild Publications, 1964), pp. 169-78.

hardware operations, and normal crew living and habitation. For the greatest portion of the mission, crewmen are exposed to weightlessness, a condition which dictates special mobility aids, restraints, and other equipment. In the Mercury and Gemini S/C, the crew had basically one position within the cabin, and the interior design and layout were similar to an aircraft cockpit. In these cases, spacecraft needs in the control/display area came closest to those of high performance aircraft. Also in these S/C, an abort in earth orbit resulted in a relatively speedy return to earth, without the need for many redundant systems or a plethora of extra supplies and equipment.

In the Apollo mission, sufficient volume, supplies, and equipment with appropriate redundancy were provided for sustaining a three-man crew for a 14-day roundtrip to the moon. Guidance and navigation hardware dictated an additional primary work station within the CM. Volume and equipment for rest stations also were provided. Equipment and stowage were centralized because of limited space--the quantity and volume of equipment carried required high-density storage. The LM cabin, which had to be manned for a relatively short time during flight, provided primarily two flight work stations and equipment to support the lunar mission.

The larger Skylab Orbiting Workshop and future space stations should give less emphasis to a primary flight work station surrounded by efficient and compact storage provisions. For S/C which are primarily passive or only used for earth orbital activity, the flight controls and displays should be different than those of current S/C, where design is largely dictated by launch and landing requirements. The large expanse of free cabin volume will present new design requirements, where in the Apollo S/C,

the limited volumes offered the crewman natural restraints and aided free-floating movements in zero gravity.

The design of the Apollo CM and LM crew stations was evolutionary. An essential part of the development program was use of mockups for design layout and varification, and for formal and informal design reviews. A significant portion of the equipment carried onboard the S/C is either furnished by the government (Government Furnished Equipment, GFE), or provided to the prime S/C contractor by a subcontractor. Sufficient control and definition of this equipment must be available to ensure adequate allocation of stowage and operational interfaces within the S/C.

The number of suppliers of S/C equipment is prodigious; significant problems exist in establishing and implementing common standards for hardware suppliers. Interface control drawings and specifications are created and maintained for satisfying these requirements. In development, when the S/C is associated with a specific mission, it undergoes a degree of mission-oriented modification, primarily in its stowage and "loose" hardware provision configuration. A formally approved stowage list and drawing are maintained for each S/C. These documents serve to define the provisions carried on each S/C; the drawing details the actual stowage configuration. High fidelity mockups are configured to a full-up mission stowage configuration, and formal reviews of this configuration are held with flight and back-up crews. Representative mission timelines and sequences are used. With the actual S/C, a series of crew compartment reviews are held using flight or representative hardware. These reviews check the physical fit and function of all mating and operational interfaces to assure their adequacy. Such tests are essential to verify flight readiness of the

crew station and assure identification of fit or function problems prior to flight, when they can be readily fixed without affecting the mission.

Preview of Thesis Contents

This thesis discusses management tools which have proved successful in maintaining configuration control of the crew station and its hardware interfaces, and, to a limited extent, examples of general and detailed requirements of interior S/C crew station design and layout. My efforts to start this work were spurred by a letter from Lt. General Sam C. Phillips, NASA Apollo Program Director, NASA Headquarters, to Mr. George Low, Apollo Program Manager, NASA Manned Spacecraft Center (MSC), Houston, Texas. In this letter General Phillips indicated that "The difficulties in designing the crew station within the constraints of space, weight, and time and money available, and the functional requirement associated with operating the vehicle(s), are generally recognized, but I do not feel specifically understood or identified." He went on to state that "our experience in this area should be properly communicated," and suggested something in the form of a crew station handbook with "inclusion of the types of problems and limitations that have been experienced to date in the area of design, development and use."[2]

Table 1 contains an outline of a complete crew station handbook. Compilation of such a handbook would require extensive time and resources of a team with crew station expertise. This thesis provides a framework for such a handbook plus examples of its contents. I have written a complete chapter on the key element of a crew station program--that

[2]Letter MAO, to Mr. George M. Low, Apollo Program Manager, NASA Manned Spacecraft Center, Houston, Texas, from Sam C. Phillips, Lt. General, USAF, NASA Apollo Program Director, NASA Headquarters (Washington, D. C.: March 17, 1969).

Table 1. CREW STATION HANDBOOK OUTLINE

CHAPTER I--CREW STATION DESIGN/DEVELOPMENT: CONTROL AND MANAGEMENT

A. Crew Station Integration Organization

1. General Contract Effort
2. General NASA and S/C Contractor Responsibilities
3. Specific S/C Contractor Responsibilities
4. Flight Crew Support Teams
5. S/C Contractor Support Teams

B. Design Requirements and Configuration Control

1. S/C Design Requirements Documentation
2. S/C Configuration Control
3. S/C to GFE Interface Configuration Control

C. S/C Development and Configuration Reviews

1. Mockup Utilization
2. Flight Crew Participation
3. Crew Station Review Perspective
4. Preliminary Design Reviews
5. Critical Design Reviews
6. Crew Compartment Stowage Reviews
7. S/C Bench Layout Reviews
8. Crew Compartment Fit and Function/Crew Equipment Interface Test
9. Other Crew Station Reviews

CHAPTER II--GENERAL INTERNAL CREW STATION LAYOUT/CONFIGURATION REQUIREMENTS

A. Total Crew Functional Volume

B. General Equipment, Stowage/Compartment Layout, and Habitability

1. Basic Factors
2. Habitability
3. Equipment and Stowage Arrangement
4. Task Analysis and Detailed Requirements

C. Crew Size/Anthropometry, Mobility and Visibility Requirements

1. Crew Size/Anthropometric Criteria for Spacecraft Design

   a. Examples of Problems

2. Clothing Effects on Size

Table 1 continued --

3. Suit and Suited Capabilities

   a. Suited Dimensions
   b. Suited Mobility Values
   c. Examples of Problems

D. Crew Couches/Body Supports: Design, Articulation, and Stroking

E. Controls and Displays/Subsystem Operations

F. Crew Compartment Closeout Provisions

   1. Closeout Panels or Provisions
   2. Debris/Equipment Traps and Nets
   3. Wire/Tubing Protection

G. Flammability and Materials Requirements

H. Windows

   1. Definition/Description
   2. Function/Utilization

I. Intravehicular Activity Requirements; Crewman Restraint, Stability, and Translation Aids

J. Ingress/Egress Requirements, Transfer Hatch, and Tunnel Provisions

K. Work, Rest, Sleep and other Stations

L. Artificial and Natural Illumination and Visibility Aids

M. Crew Compartment Cleanliness and Cleanup Provisions

N. Sharp Edges, Corners, and Protrusion Hazards

   1. Basic Factors
   2. Examples of Problems
   3. Recommended Criteria

O. Cabin Environment and Environmental Control

P. Sparing, Maintenance, and Repair

CHAPTER III--DETAILED CREW STATION DESIGNS

A. Controls

   1. Remote Actuation Controls
   2. Location Mounting

Table 1 continued--

B. General Alignment Provisions for Equipment Attachment

1. Alignment Marks
2. Keying
3. Positioning Alignment

C. Electrical Connections and Wiring

1. Protection for Connectors
2. Keying/Alignment
3. Dust/Humidity Covers
4. Utility Outlets
5. Moveable Cable: flexibility, protection, and service loops

D. Protective Covering Provisions/Safety Locks

1. Connectors/Connections
2. Wiring
3. Tubing
4. Switch Protection and Guards
5. Equipment Protection/Covers

E. Safety Locks/Latches

F. Static Charge Dissipation/Grounding Requirements

G. Bracketry and Mounts

H. Body Hygiene/Waste Management Systems

1. Urine Collection
2. Feces Collection
3. Emesis Collection
4. Body Cleansing/Cleanup
5. Shaving Provisions

I. Zero Gravity Mobility, Stability, Retention, and Support Aids

1. Crewman
2. Hardware

J. Nomenclature/Markings/Coding Requirements

1. Color Coding in Design
2. Shape Coding
3. Crew Equipment Identification/Marking
4. Instructive Decals/Placards
5. Alignment Provisions
6. Orientation Aids

K. Miscellaneous Crew Equipment Design

Table 1 continued--

CHAPTER IV--STOWAGE

A. Stowage Control Documentation

B. Stowage Location/Configuration Requirements

1. Function, Frequency, Criticality, Sequence of Use, and Location of Use
2. Materials Flammability Requirements
3. Safety Hardware Accessibility
4. Restraint for Mission Forces, and Clearance Factors

C. General Stowage Design

1. Modularization/Prepackaging
2. Lockers/Compartments
3. Cushions and other Containment Devices
4. Pouches/Bags
5. Internal Restraint of Items
6. Temporary or Interim Stowage Provisions

D. Hardware: Specific Provisions

CHAPTER V--INFLIGHT EVA

A. Translation Aids Requirements

1. Configuration
2. Location

B. Crewman Restraint Provisions

1. Foot Restraints
2. Body Tethers
3. Lifeline/Safety Tether

C. EVA Lighting/Lighting Aids

1. Area Illumination
2. Visual Aids
3. Glare/Reflection/Contrast Criteria

D. Hardware Retrieval System Requirements

E. EVA Life Support Requirements

1. Metabolic/Ventilation
2. Umbilical
3. Life Support Systems

Table 1 continued--

F. S/C Design for EVA Accessability

1. Positive Indications of Hardware Position
2. Tether Attachments
3. Hardware Removal Forces
4. Thermal Coverings

G. Specific Design Requirements

1. Tether Hook
2. Waist Belts
3. Tethers
4. Retrieval Systems
5. Handrails

H. EVA Testing and Simulation

1. Types of Simulation Facilities
2. Uses/Limitations
3. Hardware Support and Fidelity Requirements

CHAPTER VI--CREW STATION REVIEW RESULTS AND ANALYSIS

A. Taxonomy of Results

B. Summary of Results

C. Summary of Main Design Lessons

D. Recommendations and Conclusions

related to crew station design/development, control, and management. In addition, I have singled out specific design areas from this outline, and written sample sections on them. These sections vary in style and content, depending on design subject and current knowledge.

In establishing requirements for crew station design, one faces the potential pitfall of inferring that the requirements and lessons of current S/C design can be applied to future designs. However, some of these requirements can only be dictated by a specific mission or function and would have to be modified for specific needs. Other design requirements, particularly those which use human factors or other basic lessons, can remain firm. These requirements will generally be identified in this thesis by "shall be" or other normative terms.

I have not attempted to relate various management techniques and tools described here to other laymen applications. However, such applications do exist and merit attention.

I draw from my experiences in the Apollo Spacecraft Program, other U.S. or U.S.S.R. space programs, and related literature. Maximum use is made of the many crew station mockup design reviews and flight crew reviews from the Apollo Program. It was primarily at these reviews where considerable resources, astronaut experience and know-how, and engineering judgment were applied for achieving a successful and safe Apollo S/C configuration.

Figure 1

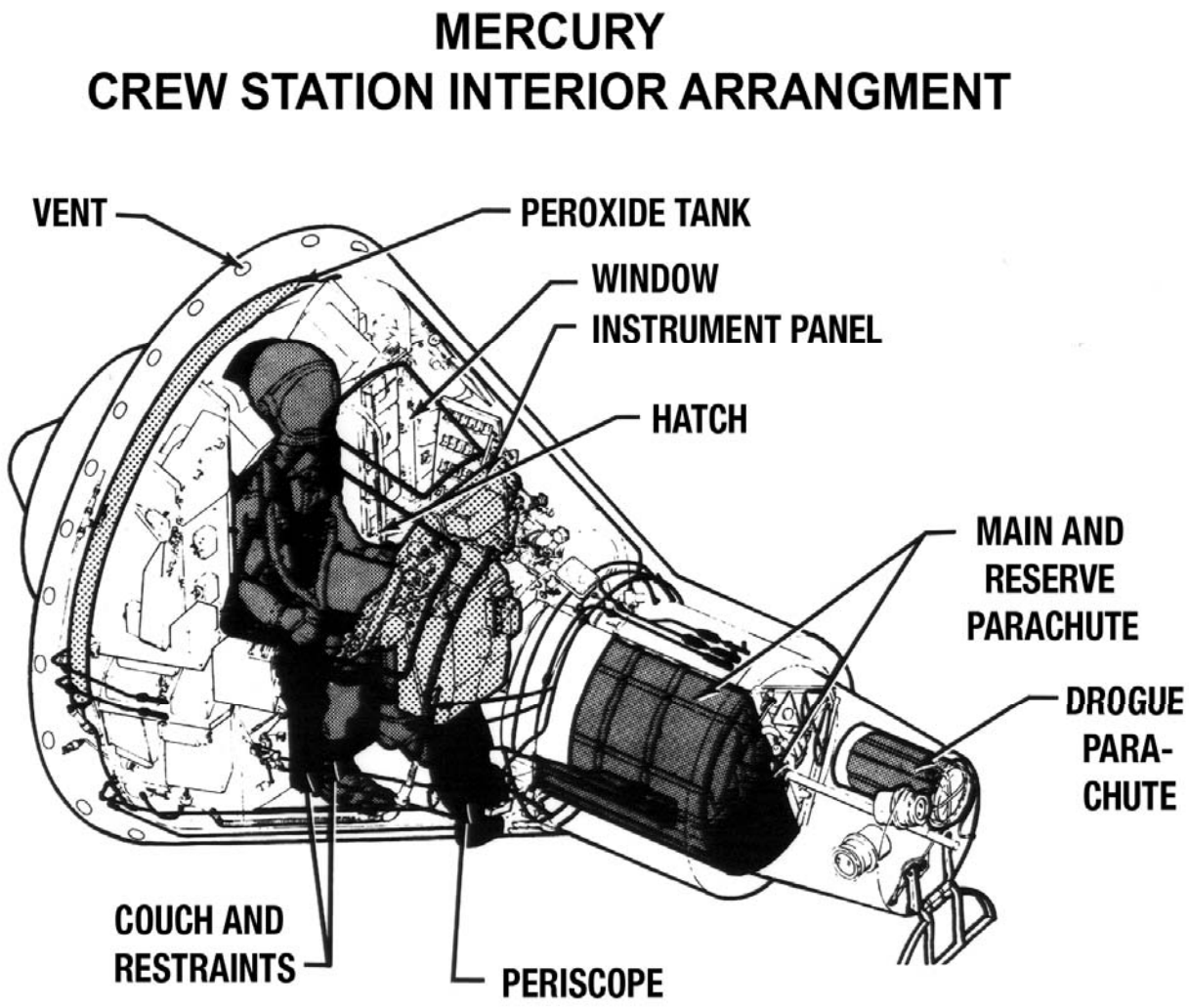

Source: "Results of First United States Orbital Spaceflight," NASA, February 20, 1962, p. 6

Figure 2 MERCURY SPACECRAFT CABIN ARRANGEMENT

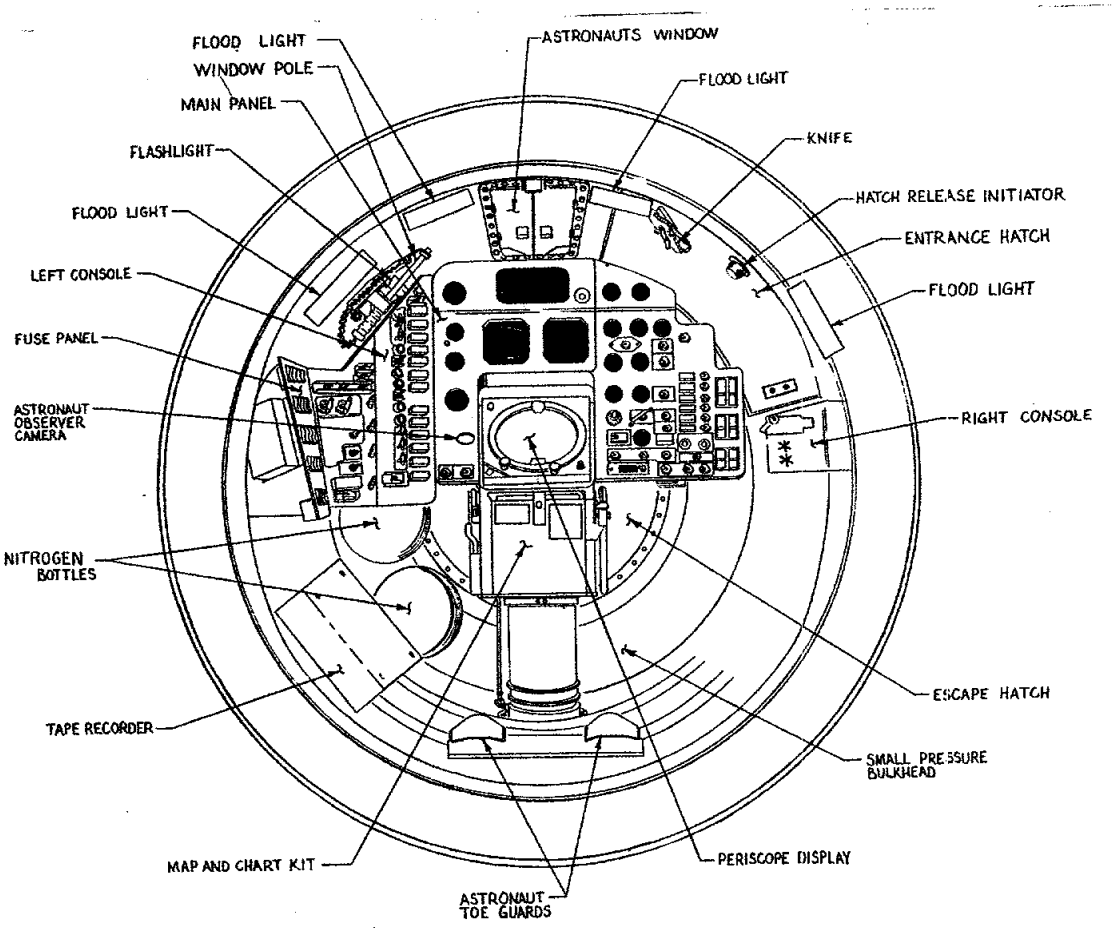

Source: "Results of First United States Manned Orbital Space Flight," NASA, February 20, 1962, p. 7.

Figure 1

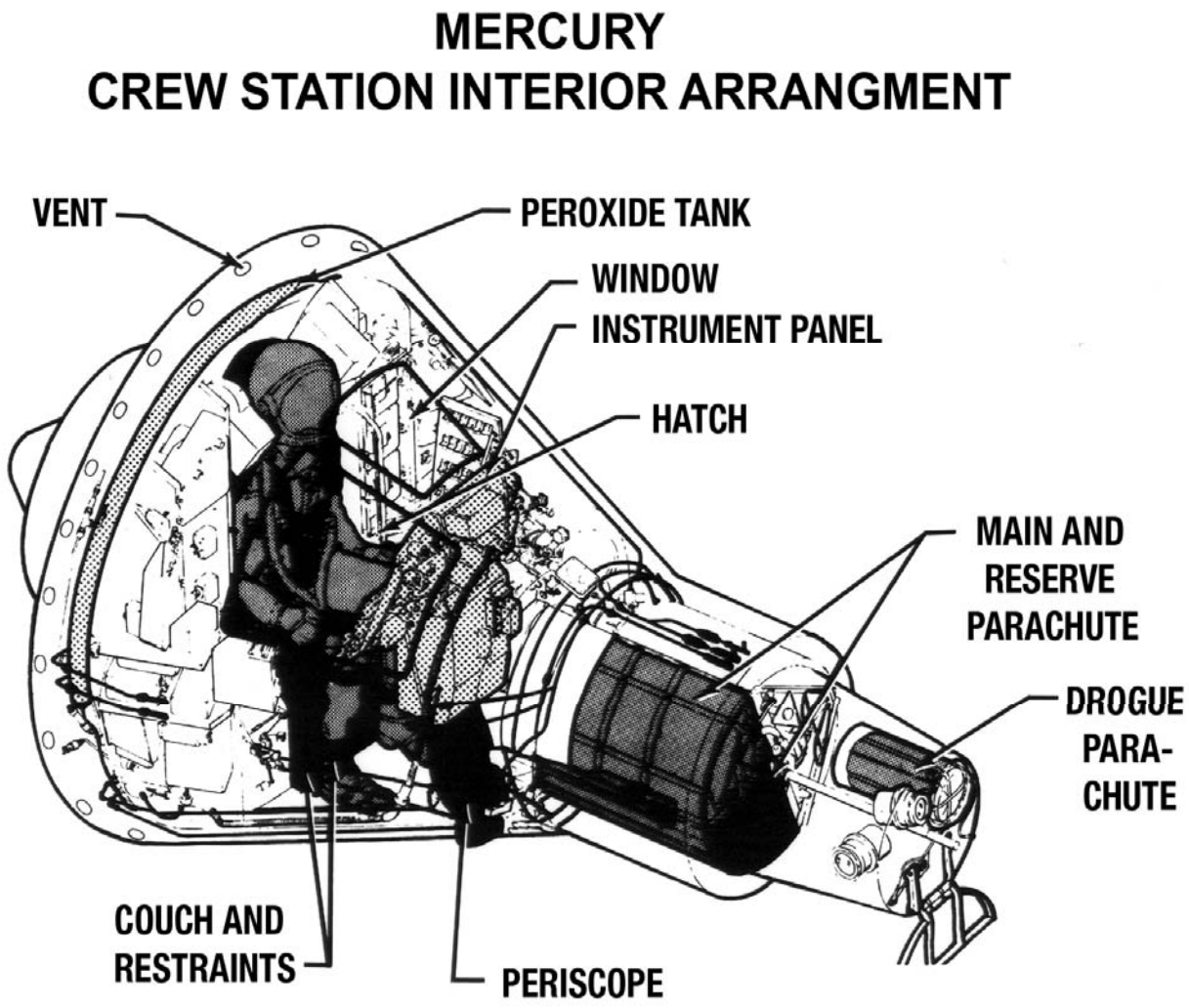

Source: "Results of First United States Orbital Spaceflight," NASA, February 20, 1962, p. 6

Photo 1 A “Fish-Eye” View of the Gemini Crew Station

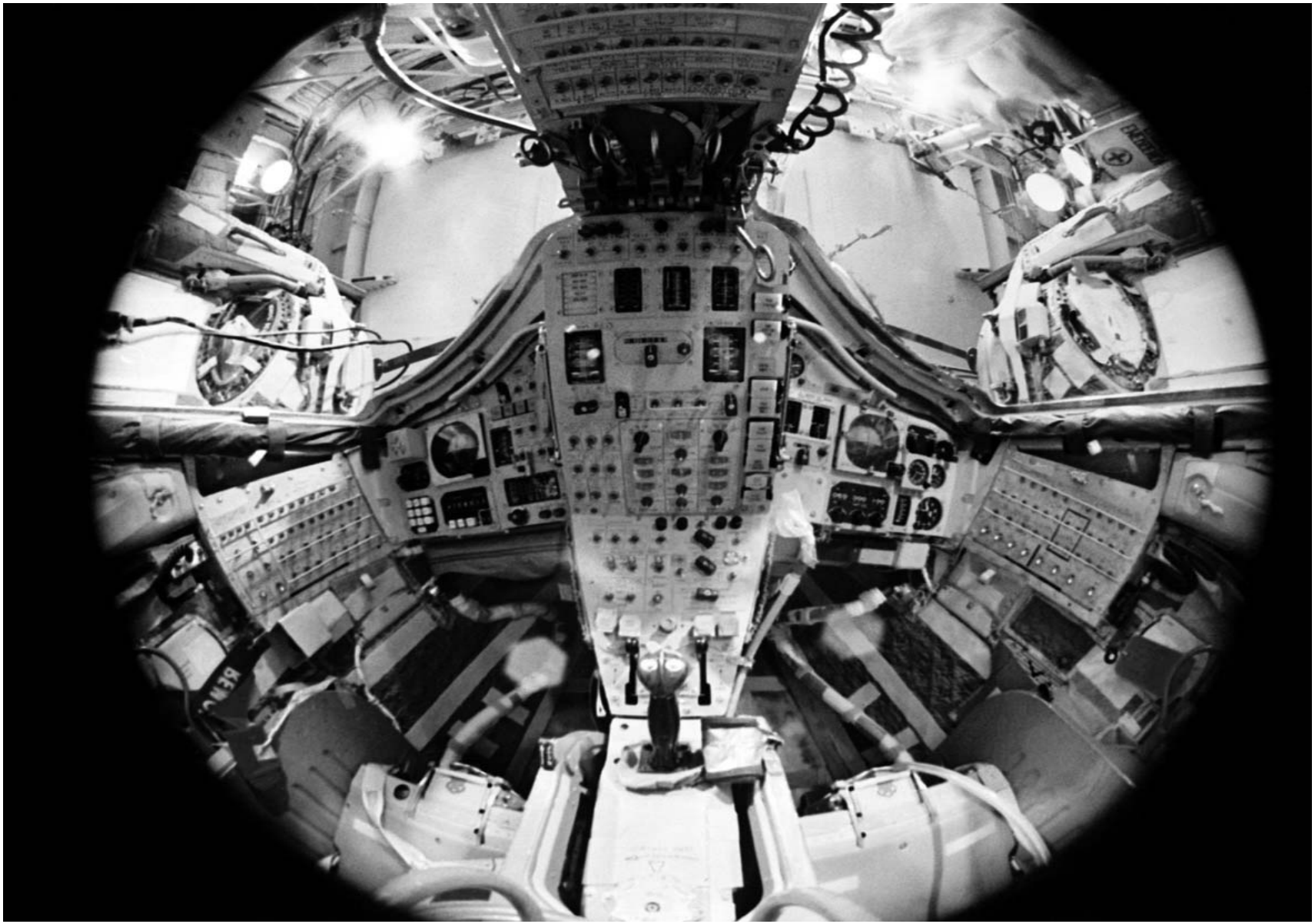

Figure 4

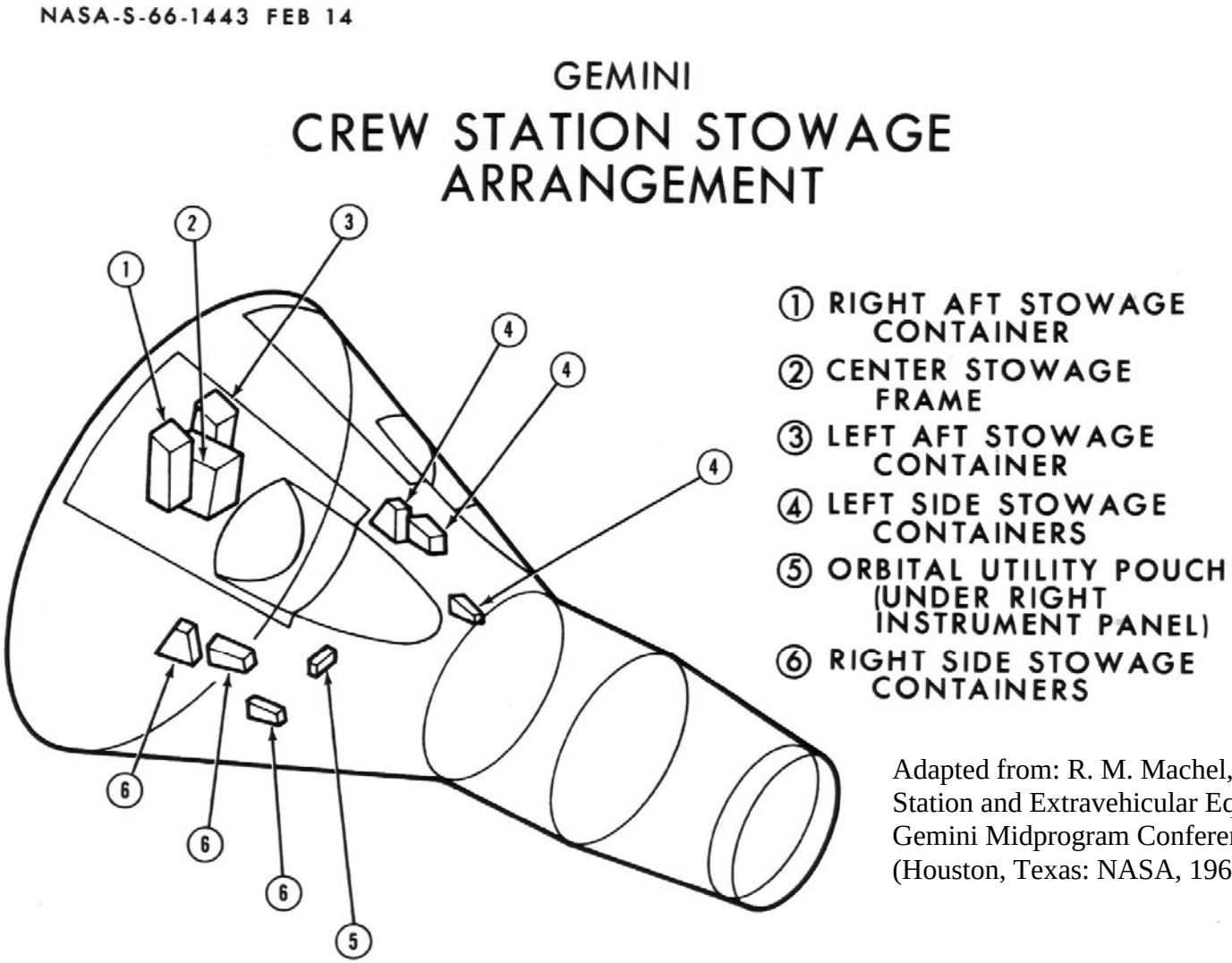

Adapted from: R. M. Machel, et al., Crew Station and Extravehicular Equipment," Gemini Midprogram Conference (Houston, Texas: NASA, 1966) p. 58

Figure 5

APOLLO
CREW STATION INTERIOR ARRANGEMENT

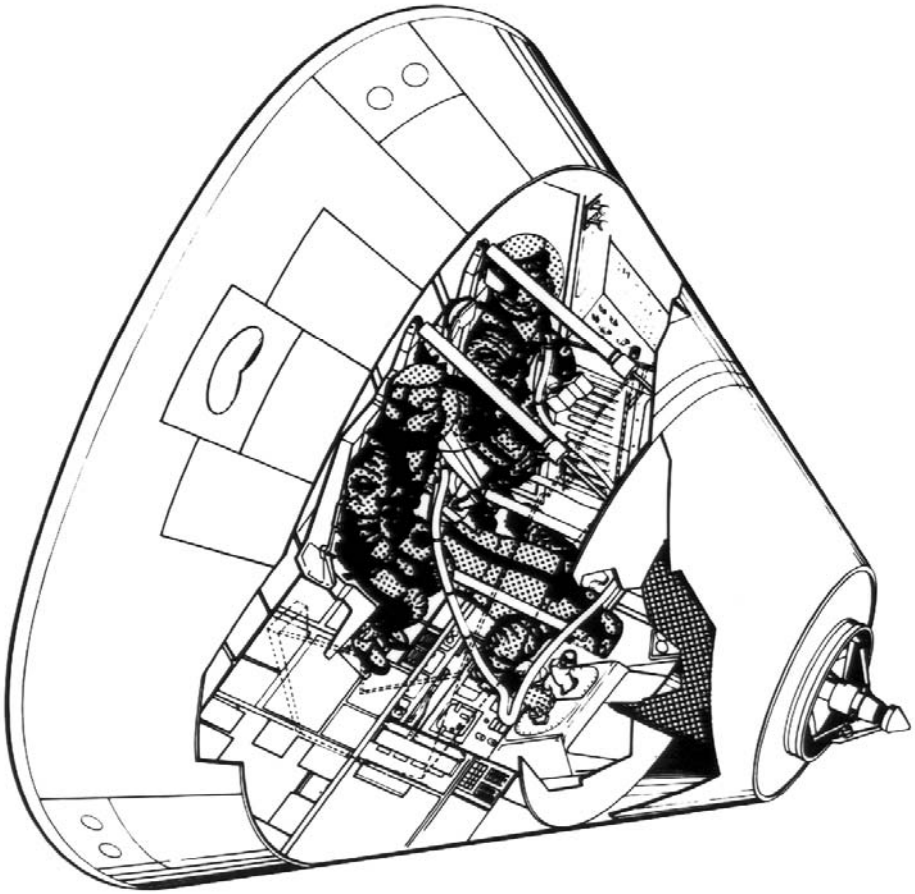

Source: J. P. Loftus and R. L. Bond, "Crew Tasks and Trainings,, Lunar Landing Symposium

Figure 6 APOLLO COMMAND MODULE SPACECRAFT CONFIGURATION

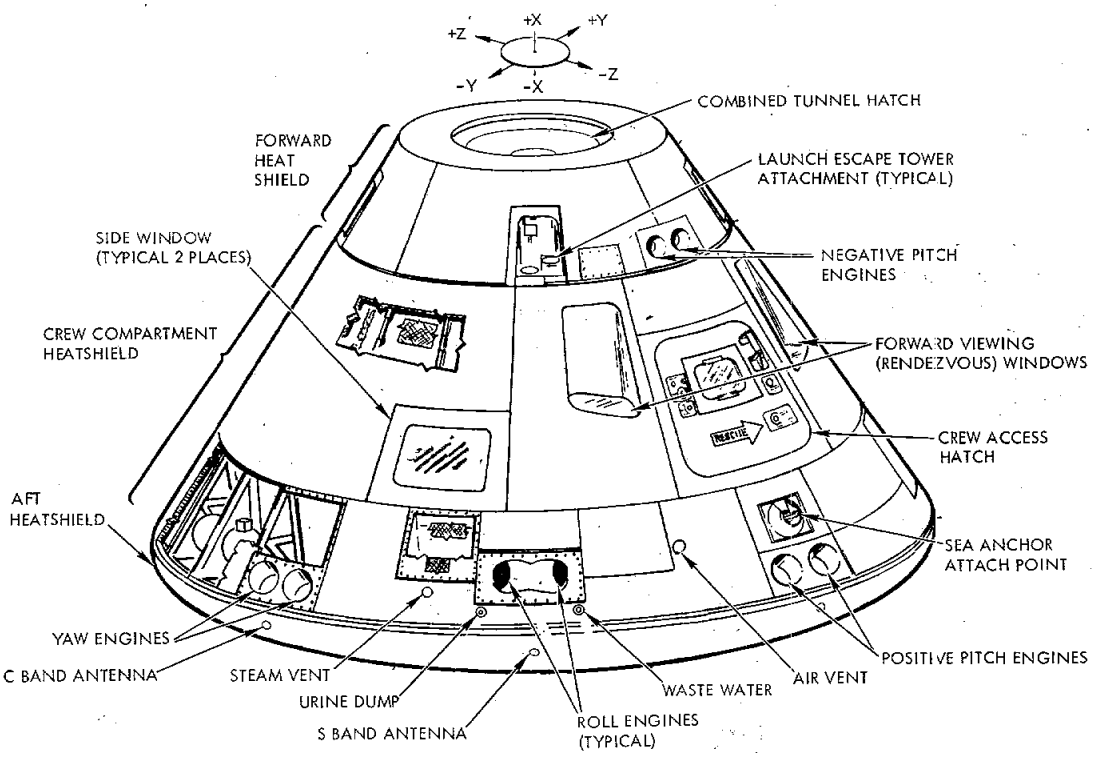

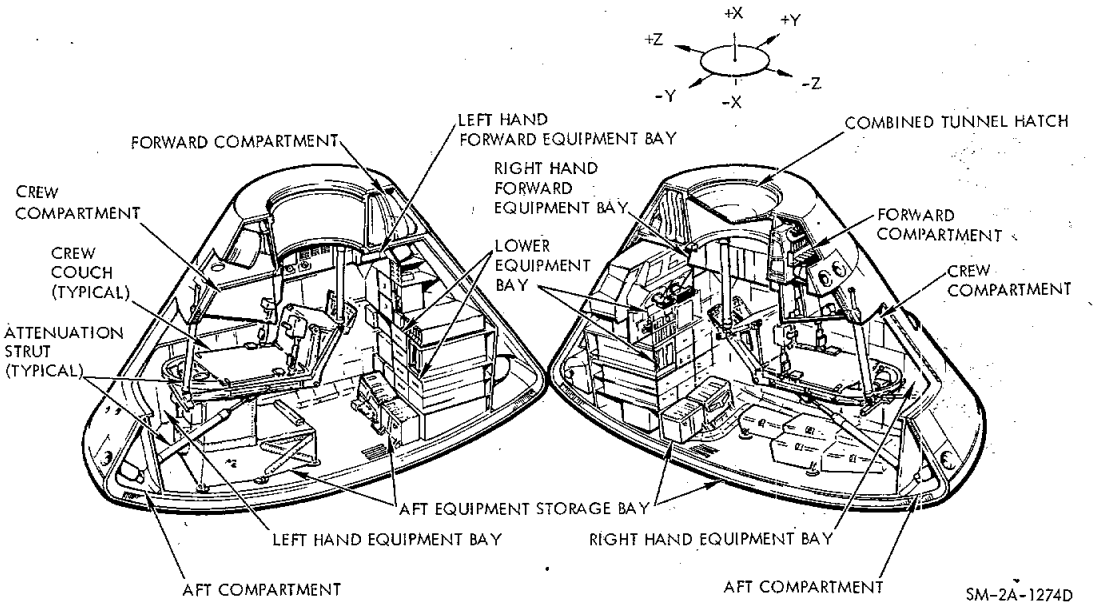

Source: Apollo Operations Handbook, Block II Spacecraft, Vol. I: Spacecraft Description, Apollo Document SID 66-1508 SM2A-03-Block II-1 (North American Aviation, January 15, 1970, p. 1-5.

NASA-S-71-2308-V

APOLLO CREW COMPARTMENT

BLOCK II

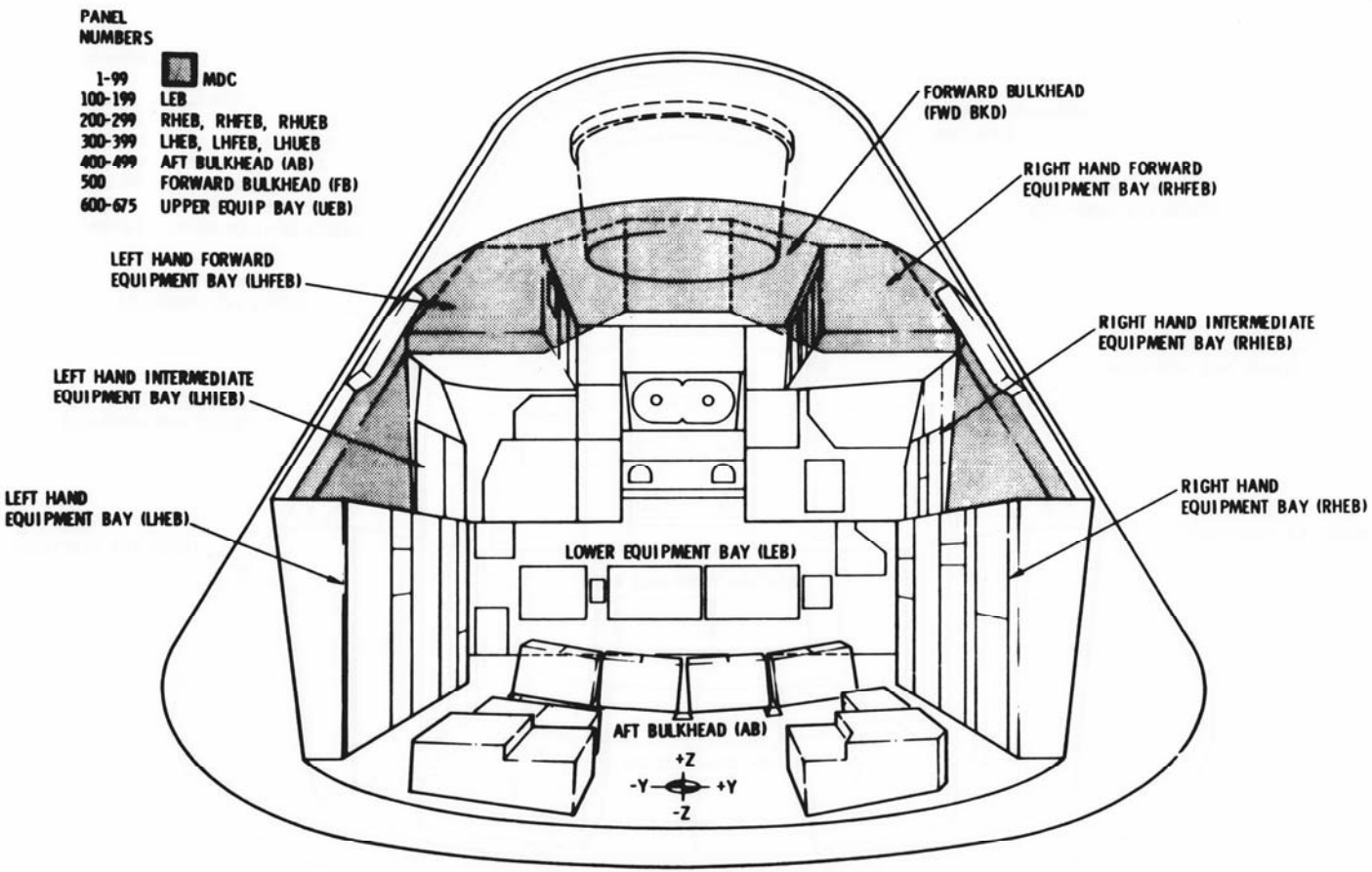

Figure 8. Details of Apollo CM Crew Station.

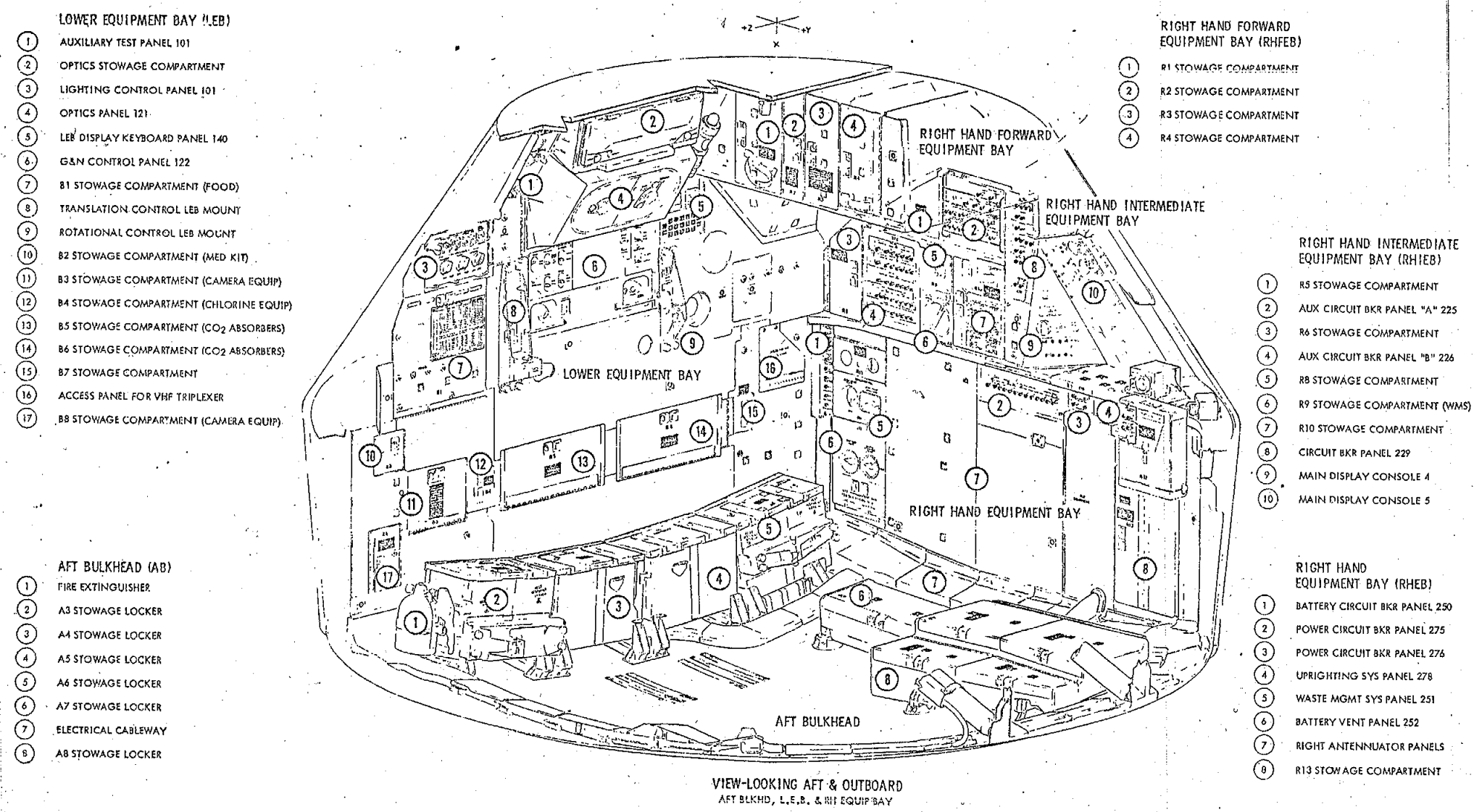

Source: Apollo Operations Handbook, Block II Spacecraft, Vol. I: Spacecraft Description, Apollo Document SID 66-1508 SM2A-03-Block II-1 (North American Aviation, January 15, 1970) pp. 1-41,42.

Figure 8, continued

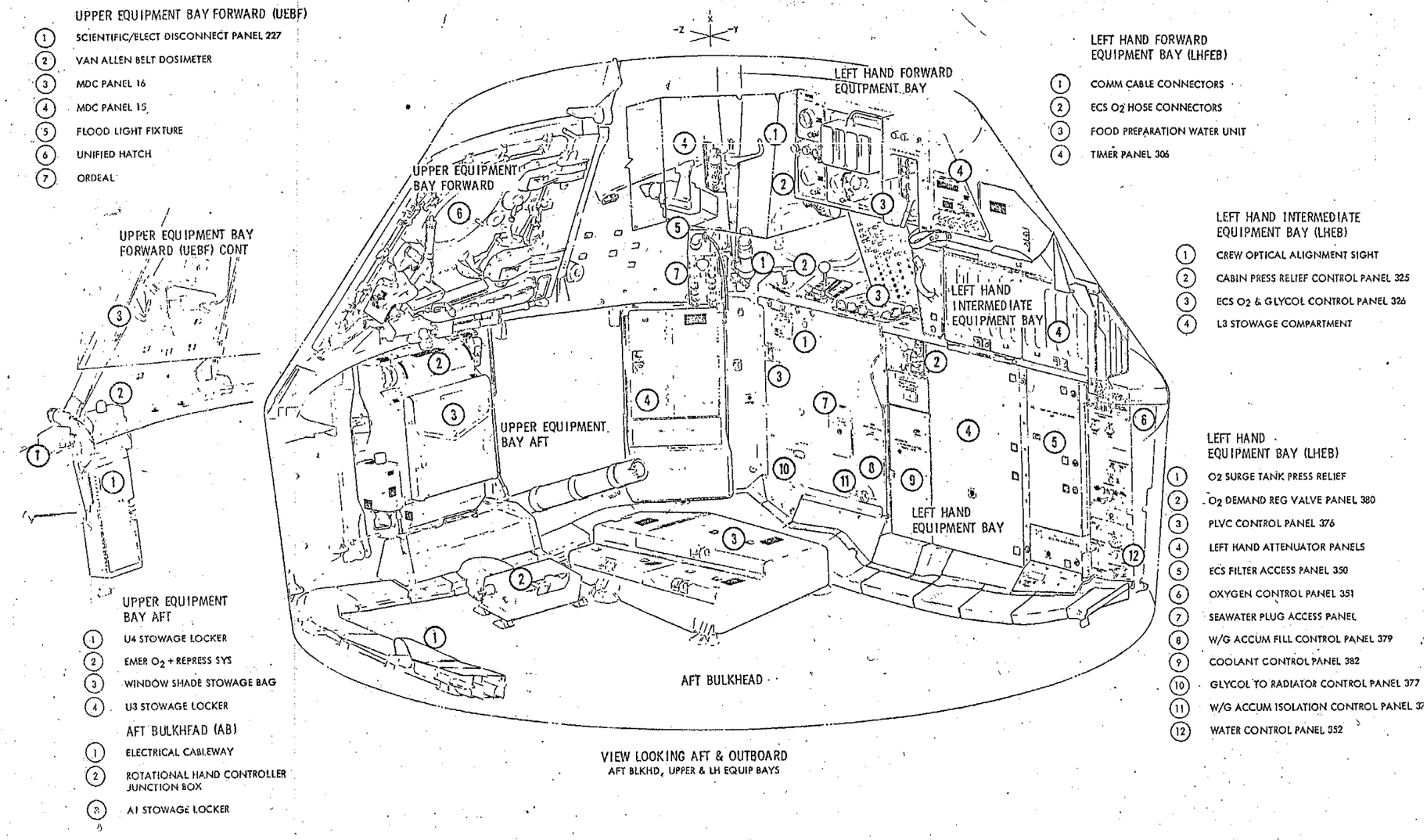

Figure 9

NASA-S-71-2307-V

CSM INTERIOR CONFIGURATION

FOLDABLE COUCHES, LEB, RHEB

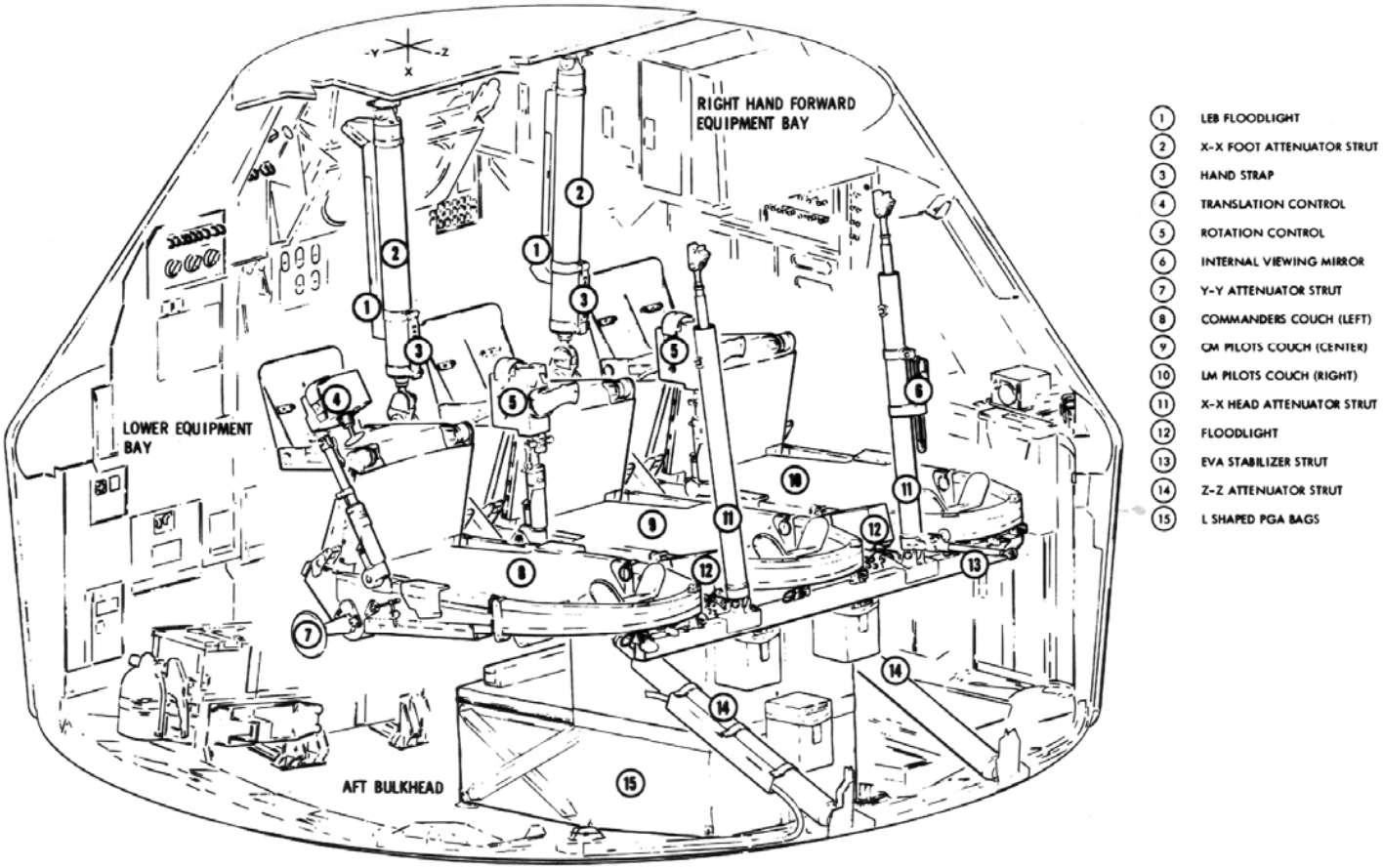

VIEW-LOOKING AFT & OUTB'D
FOLDABLE CREW COUCHES

NASA-S-71-2309-V

CSM INTERIOR CONFIGURATION

MDC, MDC BACK, FORWARD BKHD, AND LHFEB

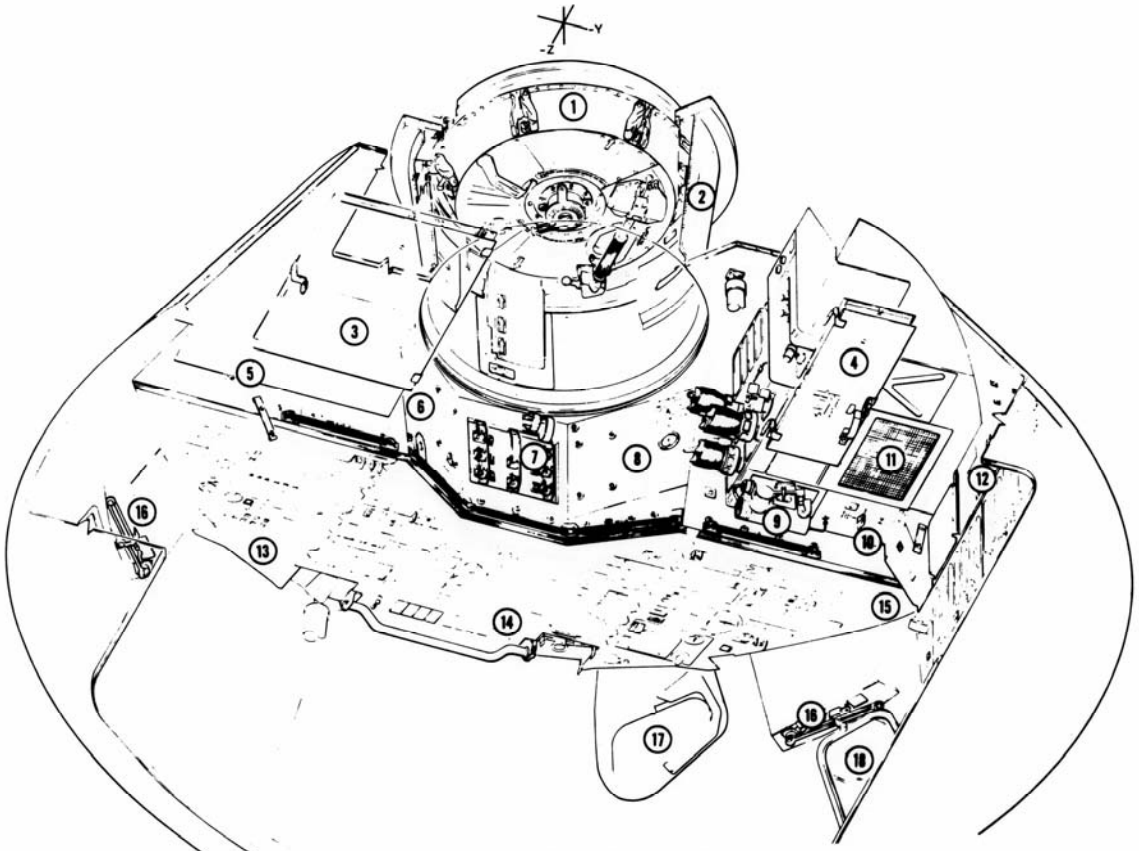

1. FWD PRESSURE HATCH (COMBINED)
2. TUNNEL
3. F1 TEMPORARY STOWAGE COMPARTMENT
4. F2 TEMPORARY STOWAGE COMPARTMENT
5. TV CAMERA RECEPTACLE
6. TV CAMERA MOUNT
7. AUDIO CONTROL PANEL 10
8. TUN/LM PRESSURIZATION PANEL 12
9. WATER METERING DEVICE
10. DRINKING WATER SUPPLY PANEL 304
11. ECS RECIRCULATION FAN INTAKE
12. L2 STOWAGE COMPARTMENT
13. MAIN DISPLAY CONSOLE 3
14. MAIN DISPLAY CONSOLE 2
15. MAIN DISPLAY CONSOLE 1
16. INTERNAL VIEWING MIRROR
17. LEFT FORWARD VIEWING WINDOW
18. LEFT SIDE VIEWING WINDOW

VIEW-LOOKING FORWARD & OUTB'D
COMBINED FWD PRESSURE HATCH, MDC CLOSEOUT &
LH FWD EQUIPMENT BAY

Figure 11 LM ASCENT STAGE CREW STATION, LOOKING FORWARD

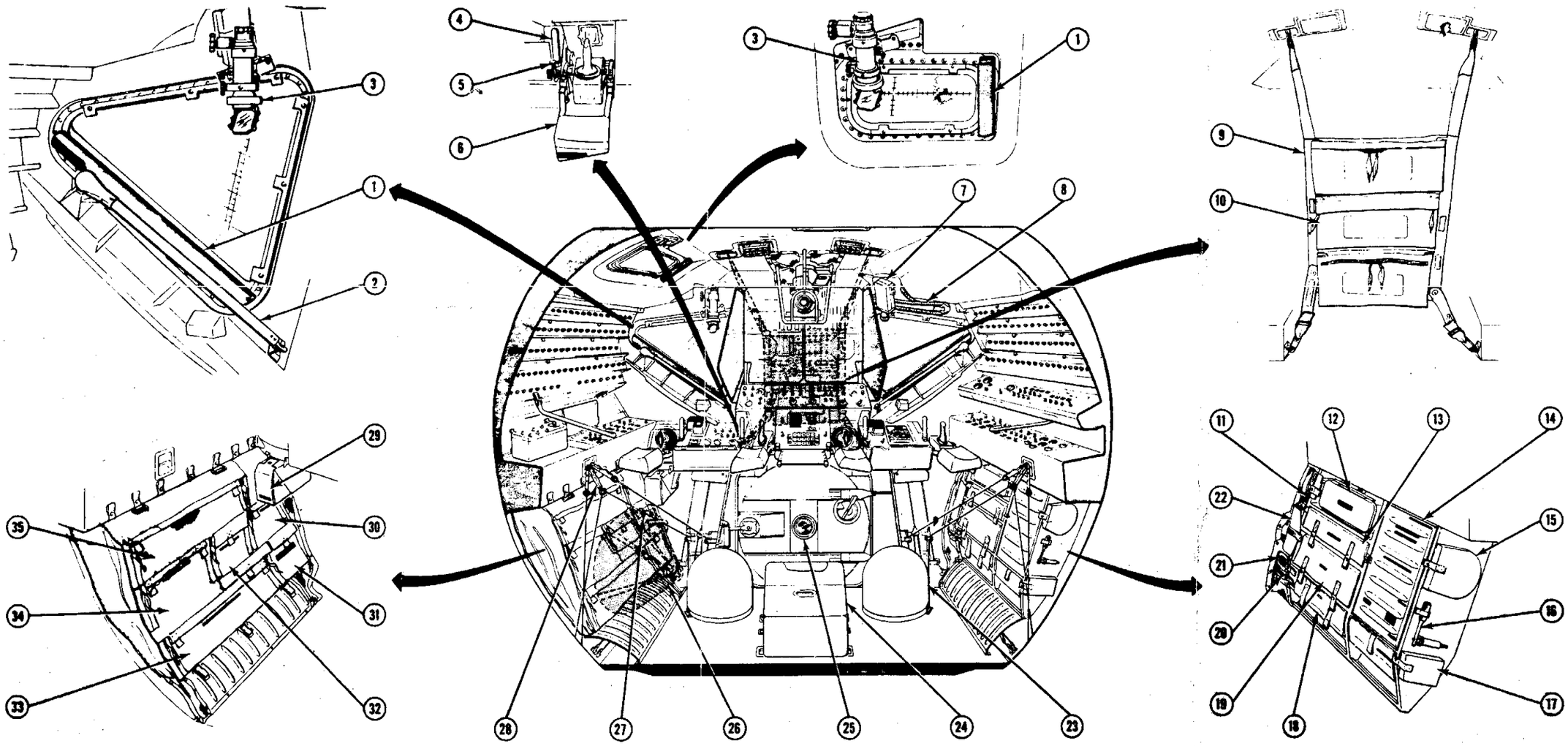

ITEM	NOMENCLATURE	LOCATION	PKG. NO.	REMARKS
1	Window shade (3)	Forward and overhead windows		CFE
2	Crash bar (2)	Forward windows		
3	COAS	Left window (position No. 2) Overhead window (position No. 1)		CFE
4	Handgrip (4)	Forward of CDR's and LMP's stations		CFE
5	Restraint reel controls	Lower right panel 5, lower left panel 6		CFE
6	Arm rests	CDR's and LMP's stations		CFE
7	Sequence camera & 18 MM lens	Above right window		GFP
8	Sequence camera power cable	Above right window on bracket		CFE
9	Curtain		109	CFE
10	Lunar orbital map	Interim stowage assy	109	GFP
11	Mirror	Below panel No. 12	125	CFE
12	Hasselblad camera, 70 mm film magazine container		127	GFE/CFE
13	Defecation collecting device, emesis bag	Below panel No. 12	123	CFE

ITEM	NOMENCLATURE	LOCATION	PKG. NO.	REMARKS
14	16 mm film magazine, S/W angle camera, 16 mm film magazine container, Hasselblad magazine EVA camera tether, polarizing filter, automatic spotmeter	Camera compartment	117	GFE/CFE
15	Harness subassy			CFE
16	Emergency tool B	In pouch in RHSSC	118	GFE
17	LM utility towel assy		119	
18	Food	TBD	120	
19	Large & small urine collection assemblies		121	CFE
20	COAS light bulb	Below panel No. 12	122	CFE
21	AOT eyeguard assy, and high density filter	Below panel No. 12	126	CFE
22	EVA water tether assy & Lunar equip carr assy	Below panel No. 12	124	CFE

ITEM	NOMENCLATURE	LOCATION	PKG. NO.	REMARKS
23	Helmet stowage bag (2)	CDR's and LMP's stations (position No. 1)	128	GFE/GFP
24	PLSS	Between crew flight stations		CFE
25	Anti bacteria filter stowage		108	GFE
26	Docking drogue	Left of CDR's station (stowed position)	112	
27	Docking rings	On restraint harness cable		CFE
28	Restraint cables and hooks	CDR's and LMP's stations		CFE
29	CDR's check list	Below TTC		
30	ECS LiOH canister	Below panel No. 8		CFE
31	Disposable container assy	Below panel No. 8		
32	Small urine collection assy (2)	Below panel No. 8		
33	PLSS condensate container	Below panel No. 8		
34	PLSS LiOH cartridge	Below panel No. 8		
35	Large urine collection assy (2)	Below panel No. 8		

Source: Lunar Module Data Book, Volume II: LM Configuration, SNA-8-027II (Revision 2, Grumman Aerospace Corporation, LED-540-54, NASA Contract NAS 9-1100, June 9, 1970), pp. 2-9,10.

Figure 12 LM ASCENT STAGE CREW STATION, LOOKING AFT

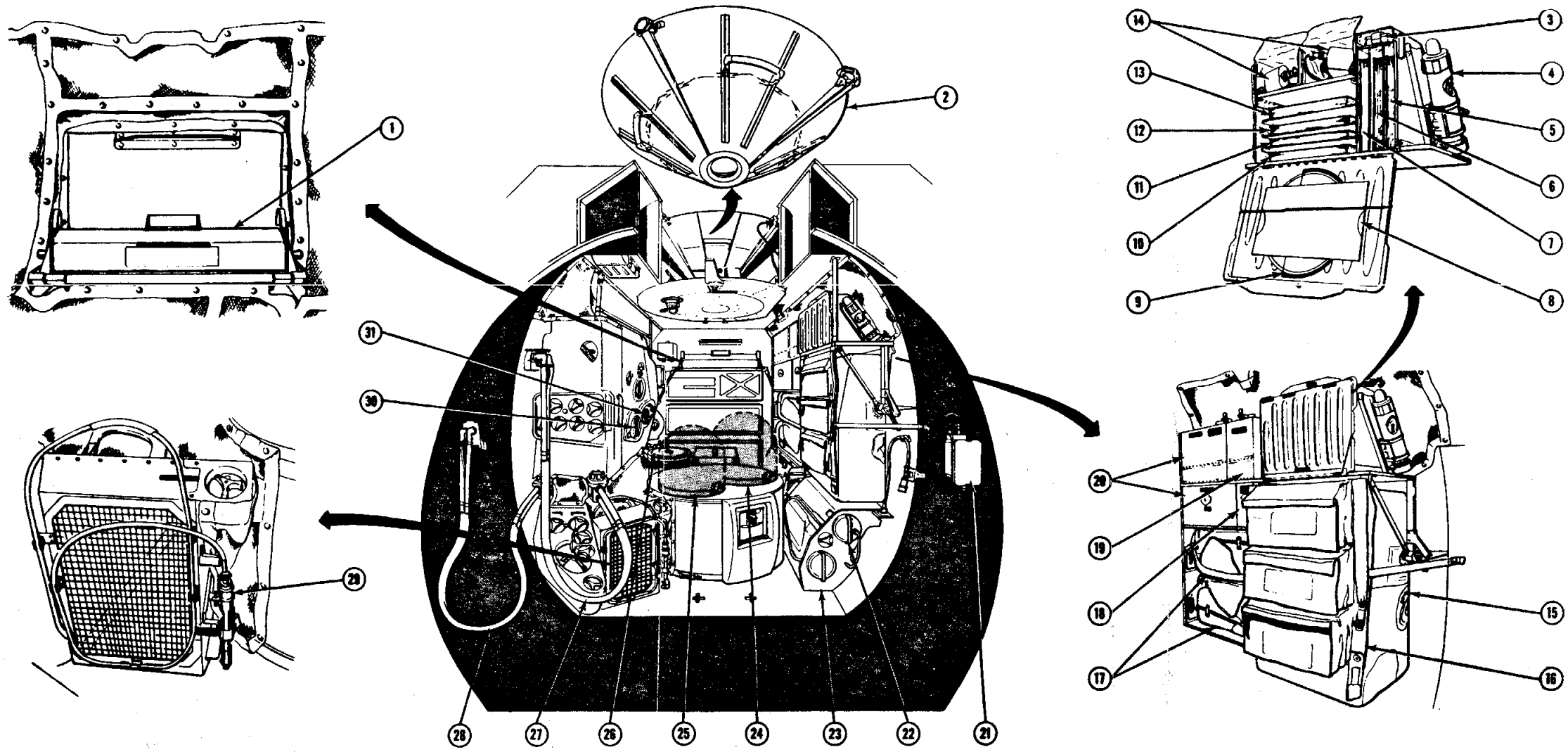

ITEM	NOMENCLATURE	LOCATION	PKG. NO.	REMARKS
1	PLSS remote control unit	center – Z 27 bulkhead	114	CFE
2	Docking drogue	Inside docking tunnel (installed position)	112	CFE
3	LM medical pkg.	Above PLSS	135	
4	Radiation survey meter	Above PLSS	134	
5	LM soft suit handbook	Above PLSS	135	GFE
6	LM hard suit handbook	Above PLSS	135	GFE
7	LM procedures	Above PLSS	135	GFE
8	Mercator lunar star chart	Above PLSS	135	GFE
9	Polar Lunar star chart	Above PLSS	135	GFE
10	Lunar descent aids	Above PLSS	135	GFE
11	LM systems data	Above PLSS	134	GFE
12	Flight plan	Above PLSS	134	GFE
13	Crew log	Above PLSS	134	GFE

ITEM	NOMENCLATURE	LOCATION	PKG. NO.	REMARKS
14	Utility light assy (2)	Above PLSS	134	CFE
15	PLSS	Recharge station	107	CFE
16	Curtain (stowed)	Front of PLSS	109	CFE
17	Oxygen purge system (2) and SRC/OPS adapter	Aft of PLSS		CFE
18	Pilot's preference kit	Above OPS	104	
19	Food		105	
20	Lunar overshoes (2)	Above OPS	130	CFE
21	Data storage electronic assembly	+ Z 27 bulkhead	115	CFE
22	Urine Collection Assy (large)	In waste management section	131	CFE
23	Waste management section	Below PLSS	Reference	CFE
24	MIP helmet stowage bag, EVVA, EV gloves, purge fitting	Ascent engine cover (position 2)	129	GFE/GFP

ITEM	NOMENCLATURE	LOCATION	PKG. NO.	REMARKS
25	CDR helmet stowage bag, EVVA, EV gloves, EMU maintenance kit, purge fitting	Ascent engine cover (position 2)	128	GFE/GFP
26	LiOH canister	Midsection, aft of ascent engine cover	116	CFE
27	O_2 umbilical assy (CDR)	+ Z 27 bulkhead		
28	O_2 umbilical assy (LMP)	+ Z 27 bulkhead		CFE
29	Water dispenser fire extinguishing assy		113	CFE
30	LiOH cartridge (ECS)	– Z 27 bulkhead	102	CFE
31	LiOH cartridge (PLSS)		101	CFE

Source: Lunar Module Data Book, Volume II: LM Configuration, SNA-8-027II (Revision 2, Grumman Aerospace Corporation, LED-540-54, NASA Contract NASA 9-1100, June 9, 1970), pp. 2-11,12.

Figure 13 LM CREWMEN FLIGHT POSITIONS

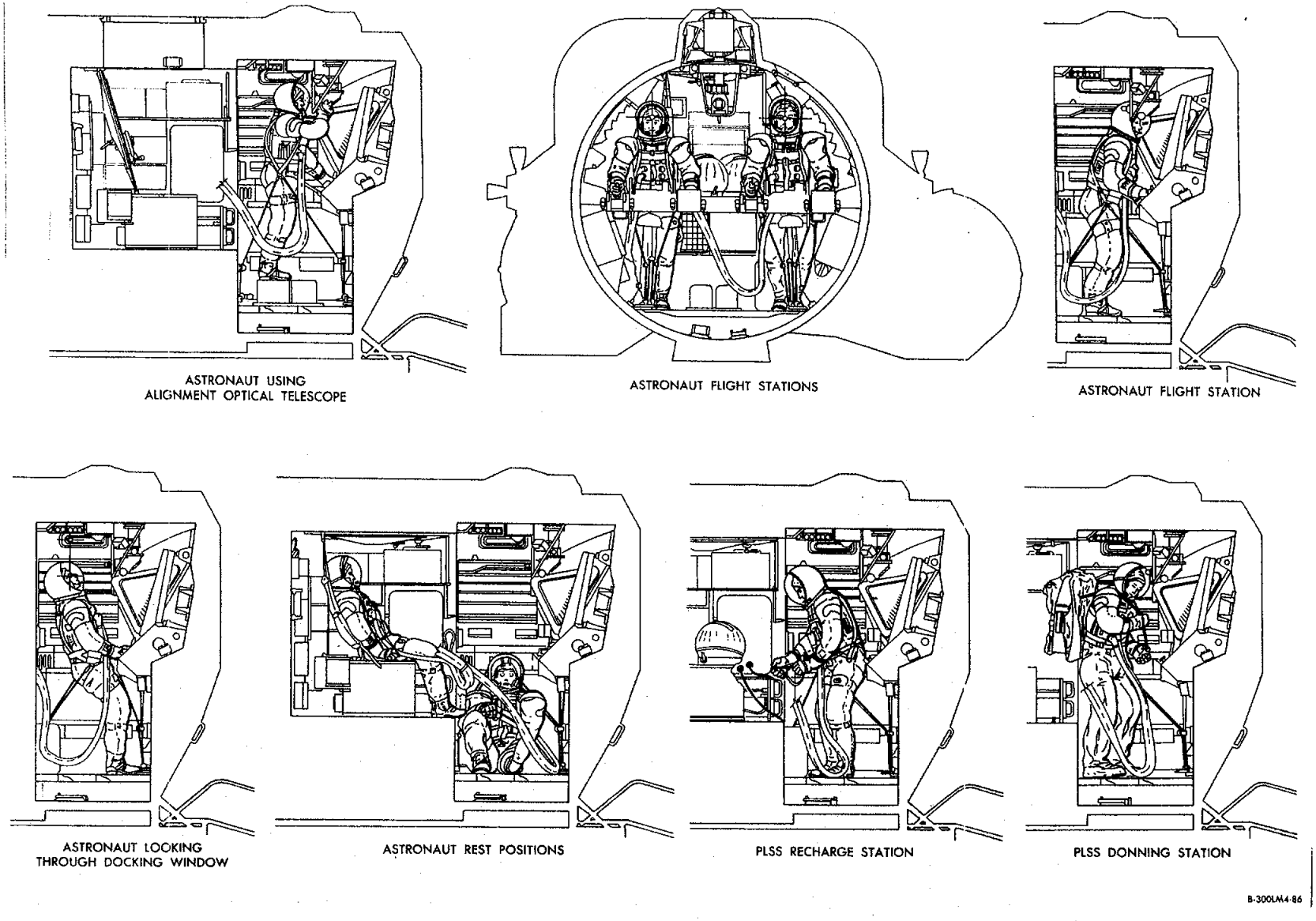

Source: Apollo Operations Handbook, Lunar Module, Vol. I: Spacecraft Description. Apollo Document LMA 790-3-LM, (Bethpage, N. Y.: Grumman Aerospace Corporation, NASA Contract NAS 9-1100, March 15, 1969), p. 1-17.

Photo 2

Photo 3. LM Crew Station Left-Hand Aft Stowage (Compartments Open)

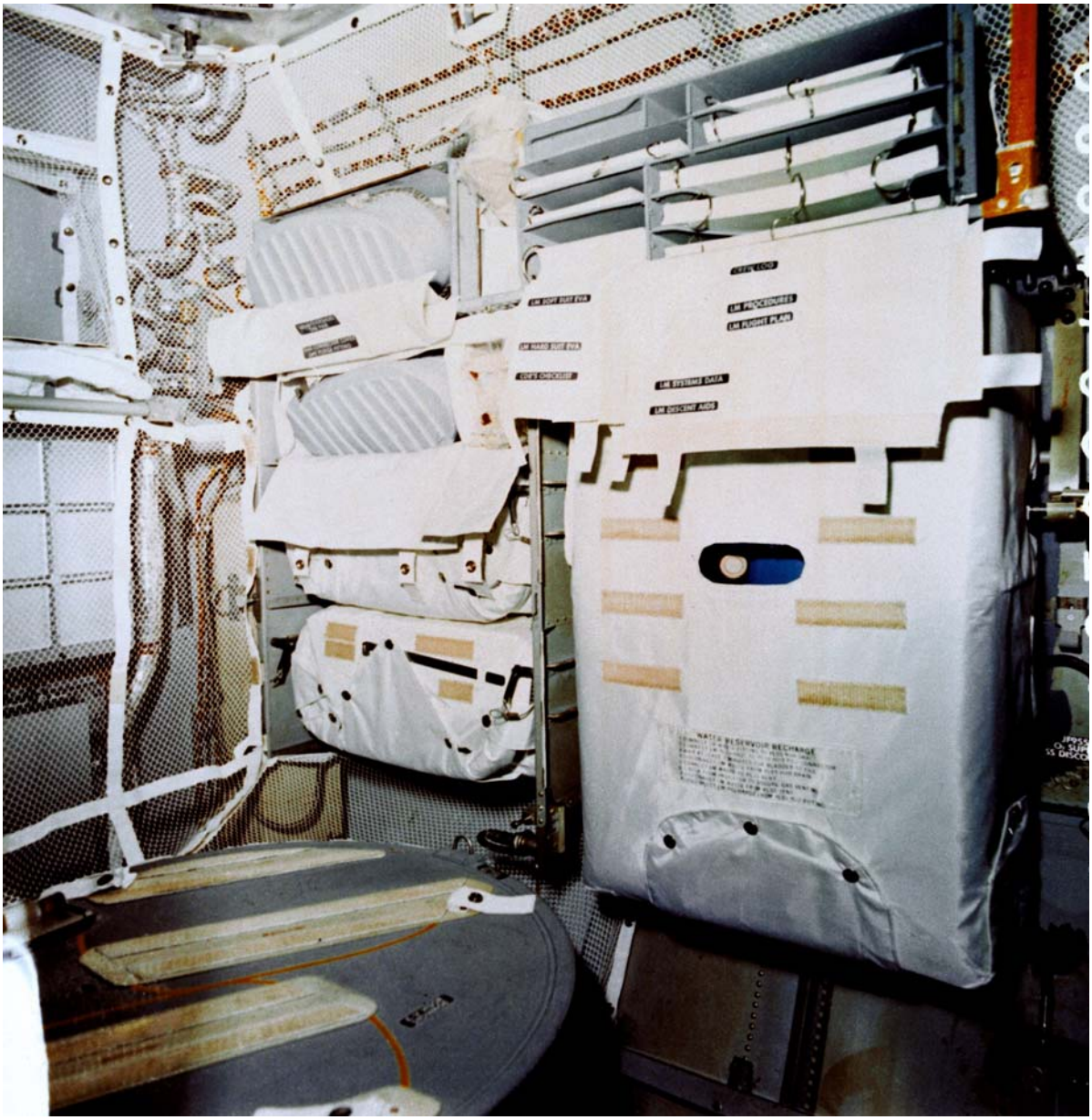

Key: 1 Main suspension rings for ejection seat's parachute.[a]

2 Cabin lining material.

3 Bolt hole receptacles for hatch.

4 Pilot's desk equipped with levers and switches for controlling the operation of the radio-telephonic system for regulating cabin temperature and for switching on manual controls and the retro-rocket.[b]

5 TV cameras (two). One camera with large-scale image en-face, the other with a small scale image.[d]

6 Instrument panel with revolving earth-globe, not visible in picture.[c]

7 Porthole with 'Vzor' optical orientation device.[c]

8 Cabin lining material covering equipment inspection hatch.[c]

9 Mirror, rotatable.

10 Radio.[c]

11 Manual control handle for yaw, pitch, and roll inputs.[c,d]

12 Food container.[c]

13 Clock.

14 Unknown control knob.

15 Ejection seat headrest.

16 Cosmonaut's ejection seat, which is reported to be capable of rotating within the spacecraft in a complete circle.[e]

---

[a]Aviation Week and Space Technology, May 31, 1965, pp. 58,59.

[b]"Details of the Flight of the 'Vostok'," translated by J. W. Palmer from Pravda (London: Royal Aircraft Establishment, May 1961).

[c]Kenneth Gatland, Manned Spacecraft, The Pocket Encyclopedia of Spaceflight in Color, (New York: Macmillan, 1967) p. 26.

[d]William Shelton, Soviet Space Exploration, The First Decade (New York: Washington Square Press, 1968).

[e]U.S., Senate Committee on Aeronautical and Space Sciences, Soviet Space Programs, 1962-1965; Goals and Purposes, Achievements, Plans, and International Implications (Washington D. C.: Government Printing Office, December 30, 1966).

Photo 4. USSR Vostok Spacecraft's Crew Station

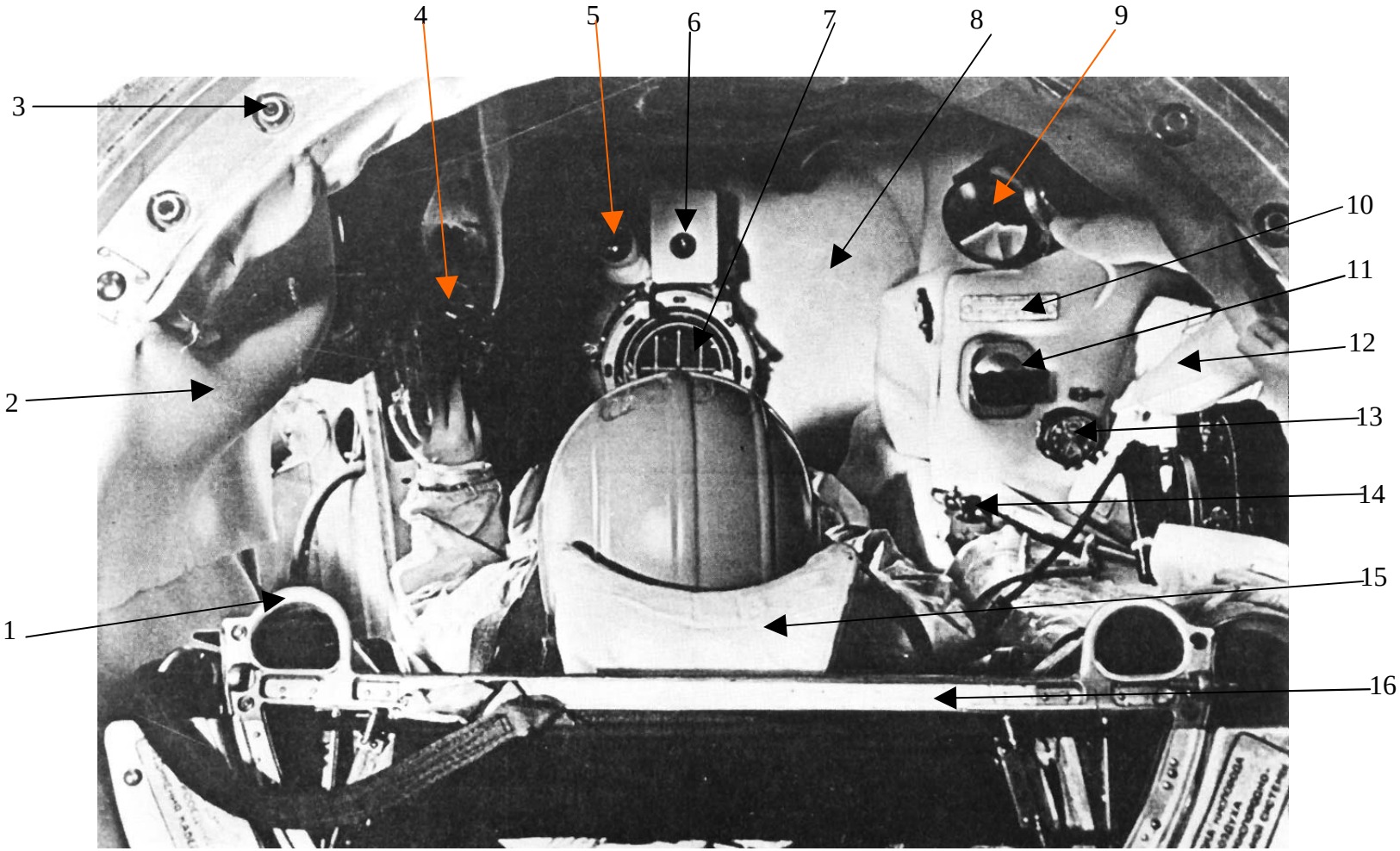

Adapted from: Aviation Week & Space technology

Photo 7. USSR Voskhod 2 Spacecraft Crew Station (Modified Voskhod Spacecraft for Two-Man and EVA Operations)

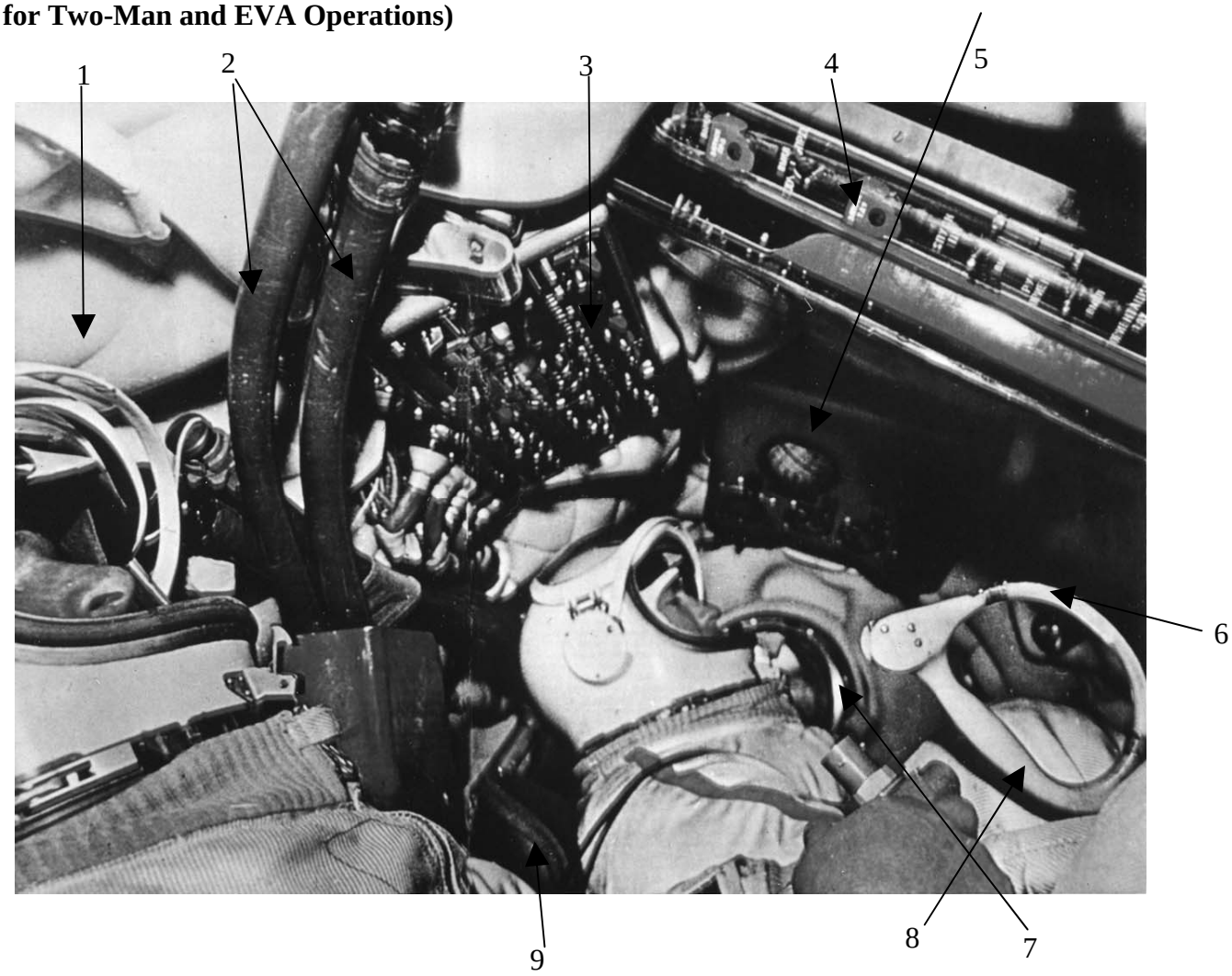

Adapted from: Opera Mundi & Novosti Agencies

Key:
1 Snow-White porolon padding[a]
2 Oxygen/air umbilicals for 7 Porthole with 'Vzor' optical cabin environmental control orientation device b
3 General control and display 8 Control stick pane] 9 Contoured couch
4 Instrument panel with switches for S/C orientation system
5 Instrument panel with "Globus" (revolving Earth-globe), ships clock and other instruments
6 Camera lens
7 Porthole with 'Vzor' optical orientation device[b]
8 Control stick
9 Contoured couch

[a]William Shelton, Soviet Space Exploration, The First Decade (New York: Washington Square Press, 1968).

[b]Kenneth Gatland, Manned Spacecraft (New York: Macmillan, 1967) p. 27.

Photo 6. USSR Voskhod 2 Spacecraft Crew Station Design, View of Main Displays

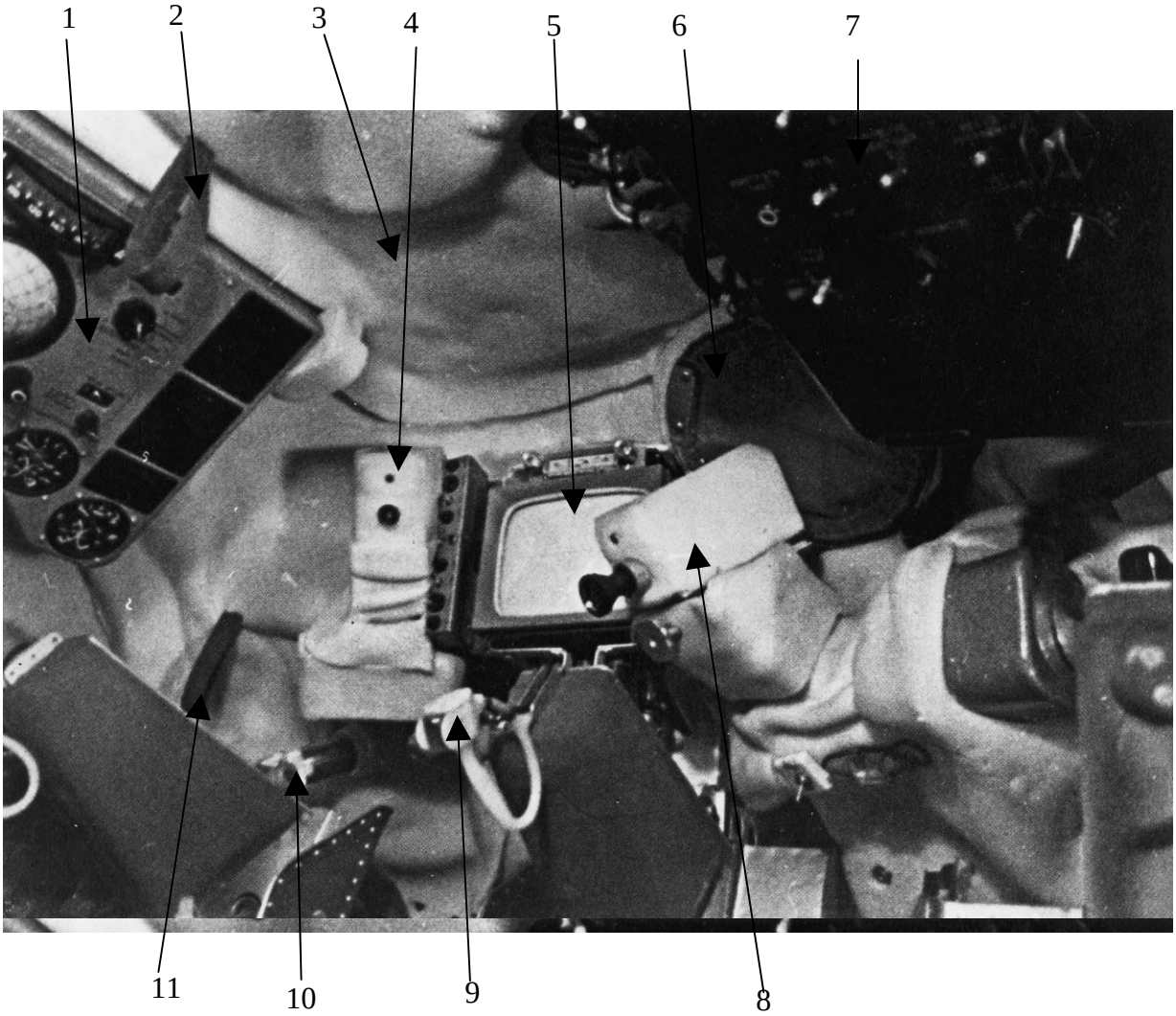

Adapted from: Opera Mundi & Novosti Agencies

Key
1 Instrument panel with Globus, ship's clock and other instruments
2 Pull tab for cover to EVA hatch
3 Snow-white porolon padding
4 TV camera
5 TV screen and perhaps CRT display
6 Window, shown covered by shade
7 General control and display panel
8 TV camera
9 Control stick (two shown)
10 Couch support strut (cylinder)
11 Pull tab for cover

Photo 5. USSR Voskhod 1 Spacecraft Crew Station, View of Left Hand Side of Cabin

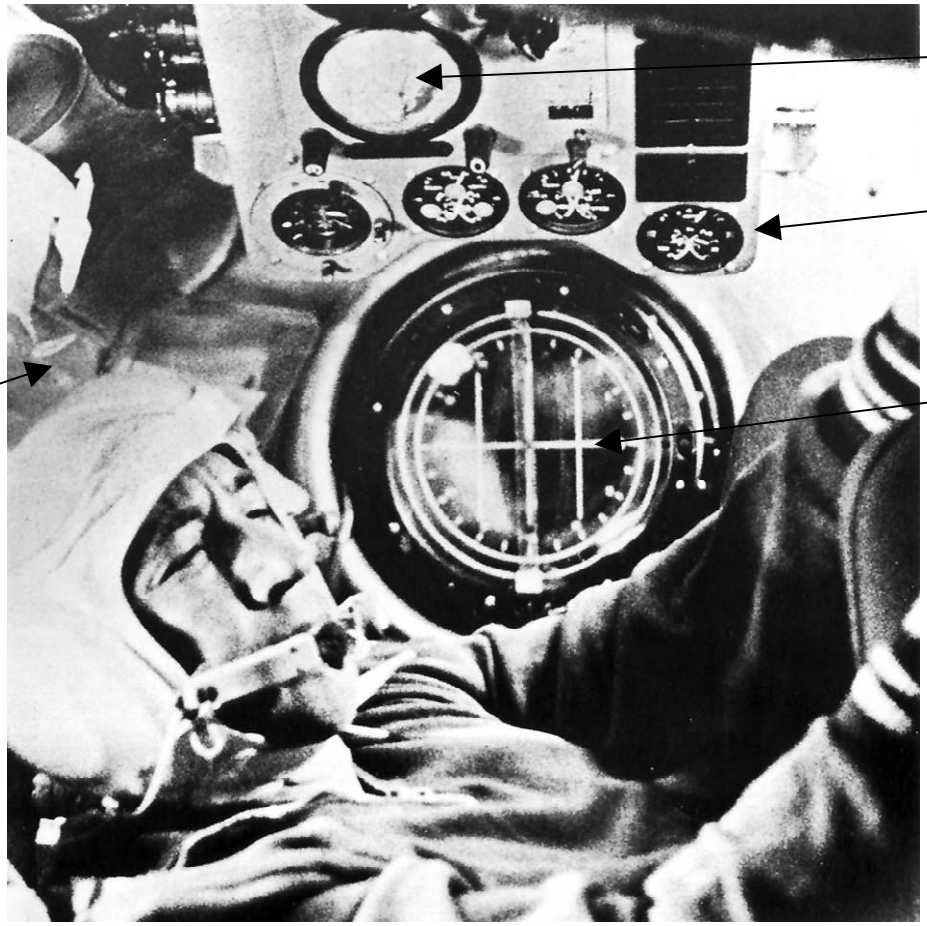

Adapted from: Soviet Life

Key:
1 Snow-white porolon padding. [a]
2 Globus, revolving Earth globe. [a]
3 Instrument panel with Globus, ship's clock and other instruments. [a]
4 Porthole with 'Vzor' optical orientation device. [b]

[a]William Shelton, Soviet Space Exploration, The First Decade (New York: Washington Square Press, 1968.

[b]Kenneth Gatland, Manned Spacecraft (New York: Macmillan, 1967) p. 27.

Photo 8. Soyuz 9 Spacecraft-Cosmonauts Cabin Simulator, with Cosmonauts Nikolayev and Sevastyanov.

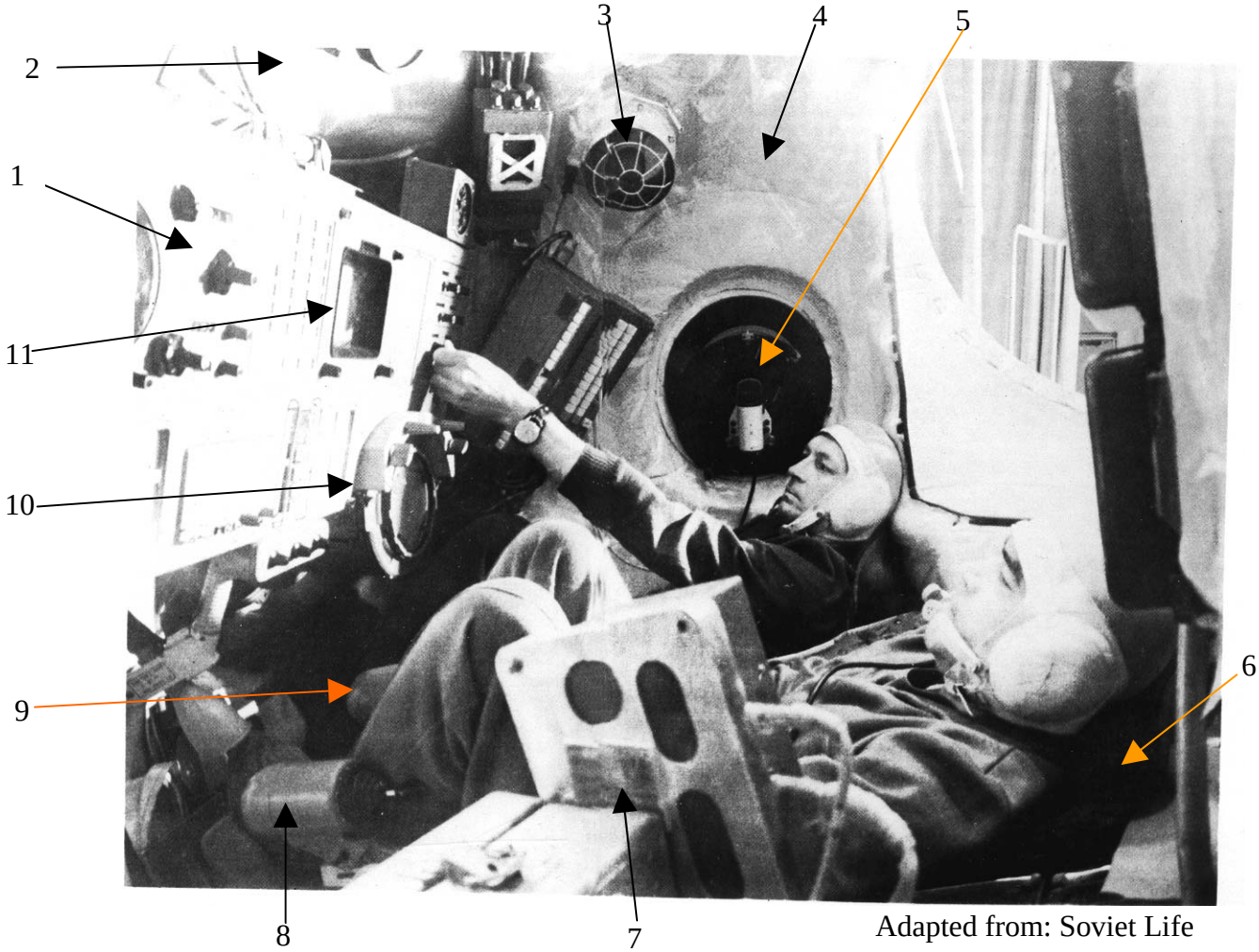

Adapted from: Soviet Life

Key:

1. Main cosmonaut's controls and display panel
2. Hatch leading to orbital compartment
3. Device which appears to be a cabin fan
4. Porolon cabin lining
5. Right-hand porthole
6. Commander's position (center of cabin), contoured couch
7. Instruments, containers of film for still and motion picture photography and supply of magnetic tape installed in place of third couch normally in this location[a]
8. Hand controller for S/C translational thrusting
9. Hand controller for S/C rotational control (knob not shown)
10. Porthole with 'Vzor' optical orientation device
11. Cathode ray tube for visual sighting of cocking or other display of information.

[a]Soviet Life (Washington, D.C., October 1970) p.13.

Photo 9. Salyut Spacecraft Main Working Comaprtment

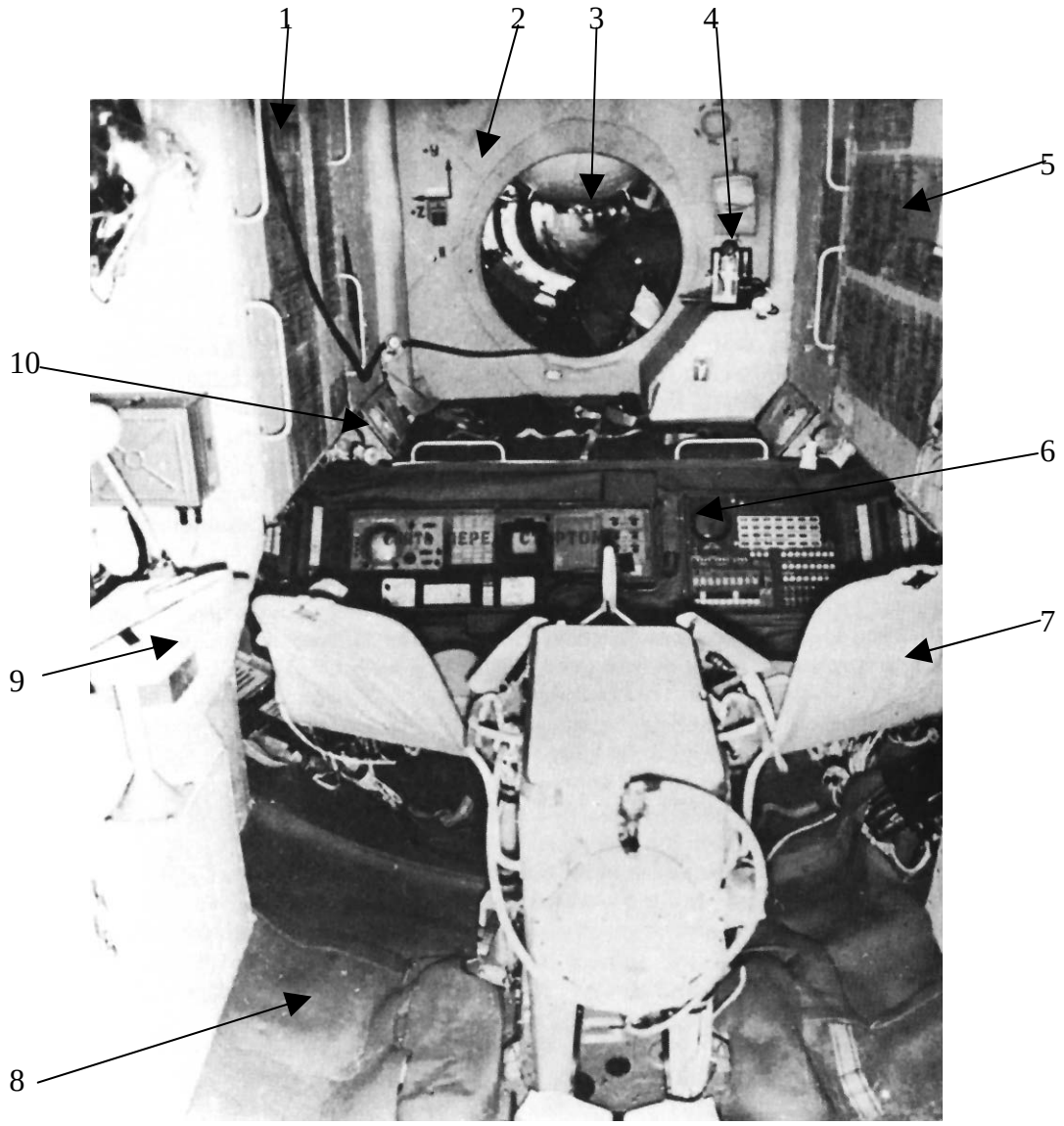

Adapted from: Aviation Week & Space Technology

Key:

1. handrails for cosmonaut translation and restraint in zero gravity
2. S/C orientation nomenclature
3. Tunnel
4. Tie-down straps for equipment
5. Instructions , flight plan, or some other part of flight data file material
6. Controls and display panel
7. Couch/chair, similar to lawn chair
8. Cabin padding/closeout material, probably porolon
9. Seat with lap-belt restraint
10. Flashlight

Chapter I

CREW STATION DESIGN/DEVELOPMENT: CONTROL AND MANAGEMENT

Crew Station Integration Organization

An overall aim of crew station management is efficient integration of the flight crew with cabin equipment, onboard provisions, and S/C systems and their operation. To accomplish this through design and development phases, testing and verification, and during crew-to-S/C integration reviews and tests, the crew station organization applies basic facets of human factors, systems engineering management, and tactful coercion. This management role involves many S/C systems and their integration, as well as individual equipment design and operations. Such a role entails numerous interfaces with a variety of disciplines and involves potential technical or organizational conflicts. It is essential, therefore, that the crew station be recognized and accepted as a "station," an entity involving an integration function which spans a number of S/C subsystems.[1] To accomplish this, NASA and the contractors must have a central control for the crew station, as well as a capacity to readily direct the necessary support for crew station efforts.[2] This central control group does not explicitly need to perform these functions, but it must have authority to direct design groups who may have such responsibility.

---

[1] Memorandum PM5/M1269, Crew Station Management at NAA, from PM/Chief Mission Operations Division to PA/Manager Command and Service Modules Apollo Spacecraft Program, written by PM5/J. P. Loftus, May 10, 1965.

[2] Originally, during development of the CSM's, crew station integration was somewhat inhibited and ineffectual because of lack of a central control function.

In addition to NASA's central control, the contractor's, flight crew support teams are required to follow the S/C from mission definition to Kennedy Spacecraft Center (KSC), and flight. These teams are important for the maintenance of crew station control over assigned spacecraft, and to the numerous interfaces they maintain and manage for the flight crew.

The next section describes the functions and responsibilities of crew station management, and offers valuable techniques for affecting these responsibilities.

General Contract Effort

The need for a crew station type program in the development of military systems, equipment, and facilities, and in NASA launch vehicle systems has been recognized and documented by Military Specification MIL-H-46855 and NASA-Marshall Space Flight Center Standard MSFC-STD-391, July 28, 1965. These documents specify a human factors engineering program to be separately performed as part of the overall program, and require submission of a program plan after contract award. In S/C development, a similar plan should be required for the crew station and contained in the Contract Statement of Work. This plan should include information as per MIL-H-46855:

> The plan, including human engineering test plans, must describe an integrated effort within the total project; it shall provide specific information to show how the Contractor will meet specified human engineering requirements during development including the design concepts to be utilized. The manner of demonstrating human engineering shall be described. Other technical and administrative data pertinent to the human engineering program, furnished by the contractor as prescribed by the contract, shall reflect consideration of the requirements herein.[3]

[3]Military Specification, MIL-H-46855, "Human Engineering Requirements for Military Systems, Equipment, and Facilities," March 29, 1968.

Contents of the Plan shall include how the contractor will implement the areas of responsibility listed below.

General NASA and S/C Contractor Responsibilities

The following summary of organizational responsibilities is a model for what was originally the NASA-MSC Apollo Program Office, Operations Integration Branch of the Systems Engineering Division. The model reflects the efforts required of a central crew station organization, primarily from the standpoint of NASA's management role, and as a monitor of Government Furnished Equipment (GFE) development and contractor's efforts. The contractor has parallel responsibilities, but his functions related to S/C design are, of course, more detailed, and those related to GFE monitoring are of a much lesser degree.

Crew Station Organization--Areas of Responsibility

I. Crew Station Design and Integration

Areas of Responsibility	Functions
1. Controls and displays 2. Equipment stowage 3. Crew compartment configuration 4. Visual docking aids 5. Cabin lighting 6. Physiological criteria and limits 7. Orbital EVA provisions 8. Lunar surface EVA provisions	1. Monitor the design and development, and manage the integration, evaluation, and postflight analysis of these systems. 2. Manage mockup reviews and stowage reviews at the contractor's facility. 3. Integrate simulation, evaluation, and test requirements, establish program priorities, and monitor the resulting implementation.

Areas of Responsibility	Functions
	4. Serve as single point of contact for MSC elements and S/C contractors on crew station and integration. 5. Establish and collate crew station design and interface requirements. 6. Integrate subsystems managers' requirements. 7. Monitor all crew compartment and stowage changes. 8. Serve as chairman at regularly scheduled crew station meetings with the contractors. 9. Coordinate crew training equipment requirements and contractor mockup support programs. Assist responsible procurement of training equipment.
II. Crew Equipment Design and Integration	
1. Space suits and EMU provisions 2. Extravehicular provisions 3. Crew operational equipment 4. Crew personal equipment 5. Biomedical monitoring equipment (Bioinstrumentation, dosimeters)	1. Monitor the design, development, testing, and evaluation of these systems. 2. Manage the program integration of the systems with the S/C contractor. 3. Manage the interface design and control of the systems with the S/C contractor. 4. Establish design and interface requirements. 5. Coordinate on or provide, as required, direction to the spacecraft contractor and to the MSC divisions concerning crew equipment interfaces and changes thereto. 6. Monitor design reviews, tests, or evaluations of the equipment to ensure compatibility with S/C and mission requirements. 7. Establish equipment support requirements for CCSR's, CCFF's, etc.

III. Experiments Integration

Experiments integration into S/C	1. Apollo Program office point of contact for flight crew integration and stowage of all experiments. 2. Monitor reviews of experiment equipment installation and stowage into S/C.

IV. Mission Operations Integration

1. Overall suitability of crew station and spacecraft design for crew utilization 2. Mission planning 3. Hazardous testing	1. Integrate mission requirements, detailed test objectives, and flight plan into design and test of crew equipment and crew station. 2. Support mission planning and establish crew station design requirements to meet planning objectives. 3. Assure integration of the provisions required to implement Program Directives on hazardous testing.

V. Support of Flight Crew Participation in OCP's and Prelaunch Testing, and Related Flight Hardware Reviews

1. Integration of GFE 2. All crew supported OCP's	1. Assist vehicle manager in all areas of crew and crew equipment integration during S/C checkout and testing at the contractor and KSC.

VI. Support of Vehicle Readiness Reviews

1. Crew station design and integration 2. Crew equipment design and integration 3. Experiments integration 4. Crew station Specification Change Notice (SCN) and Interface Control Document (ICD) status	1. Act as team leader for crew station encompassing all areas of responsibility described above, for CARR, FRR's, and similar reviews. 2. Manage the updating of Specification Change Notices and ICD status as required to support vehicle readiness reviews.

VII. Support of Configuration Management

1. Configuration Control Panel and Configuration Control Board support 2. Crew station/crew equipment ICD management 3. Stowage list requirements and presentation to CCP/CCB 4. Specification change review and maintenance	1. Review and coordinate on all requests for Engineering Change Proposals (RECP's), and Engineering Change Proposals (ECP's), SCN's, and ICD changes affecting crew station or crew integration. 2. Draft original stowage list for each S/C and define changes to stowage requirements. 3. Serve as focal point of contact between S/C contractor on stowage requirements and contractor changes.

VIII. Flight Mission Support

1. Monitor flight mission 2. Mockup support 3. Stowage revisions	Assist ground team monitoring the flight to assure: 1. Rapid assessment of potential problems or real problems which develop during the flight. 2. Provide crew station mockup in readiness for support of flight problems. 3. Provide recommendations on stowage location and method of stowage as required to support the mission. Use mockup as required for verification. Coordinate inputs with MSC elements and the S/C contractor before submittal.

Specific S/C Contractor Responsibilities[4]

The contractor shall have personnel responsible for the design integration of the crew station. The implementation and internal assignment of responsibilities are dependent on company organizational structure, policy, etc.

[4] Ibid, NASA letter PM5/L696-67, from Kenneth S. Kleinknecht, Manager Command of Service Modules, Apollo Spacecraft Program NASA-MSC to Dale D. Myers, Vice President Apollo Program Manager North American Aviation Inc., Space and Information Systems Division, May 12, 1967.

Specific responsibilities and particular functions of the contractor's organization shall be:

1. Crew compartment arrangement and stowage

   a. Design stowage containment closures and arrangements of stowed equipments.

   b. Prepare and maintain for each spacecraft a stowage drawing.

   c. Prepare and maintain all Interface Control Documents for Government Furnished Crew Equipments and act as point of contact for all stowed GFE.

   d. Prepare and maintain for each spacecraft Operational Checkout Procedures (OCP) for use during Crew Compartment Stowage Review (CCSR), Crew Compartment Fit and Function test (CCFF), or Crew Equipment Interface Test and applicable portions of OCP's for Altitude Chamber Flight Readiness and other tests designated for flight crew participation.

   e. Furnish to each spacecraft, from coordination of the initial stowage list until flight, a crew station manager who shall, during the period, act as a single point of contact between the contractor and NASA-MSC on all matters of stowed equipments, etc.

   f. Act as point of contact for definition of crew compartment arrangements to support MSC configuration control of training devices and test articles.

2. Nomenclature and markings

   a. Develop and maintain documentation to establish suitable nomenclature and abbreviations for all spacecraft controls, displays, actuation mechanisms, and functional elements.

   b. Prepare and maintain for each spacecraft a markings drawing to indicate all lettering, symbols, colors, and color or shape codes used within or on the spacecraft.

   c. Coordinate and maintain Interface Control Documents with associate contractors to standardize abbreviations and markings.

3. Flight and ground crew control mechanisms

   a. Provide and assure compliance to design criteria for forces, extent of movement, and direction of operation for all mechanical actuations to ensure capability of crew operation in all modes of crew operation for both development and design missions.

b. Coordinate and maintain Interface Control Documents with associate contractors as needed to standardize such conventions.

4. Displays and controls

a. Provide arrangement of display and control elements on the main display panel and other locations within or on the spacecraft.

b. Control design interfaces between the display and control elements and the sensing or active element within each subsystem to ensure functional integrity of the crew interface. Such control shall assure that measurement locations and uncertainties are consistent with crew requirements and that suitable nomenclature reflects the character of the data. Such control shall assure that active control elements are selected at points in the subsystem consistent with crew requirements and that suitable nomenclature reflects the character of the control.

c. Design and develop the lighting arrangements and controls for the spacecraft interior and exterior.

d. Design and develop auxiliary crew aids for system management functions.

e. Prepare and maintain appropriate Interface Control Documents with associate contractors to standardize, as far as possible, terms, abbreviations, lighting, movement conventions, and other appropriate design details.

5. Extra vehicular activity provisions

a. Design, develop, and test handrails, tether points, deployment, stabilization devices, and other aids to crew translation and task accomplishment.

b. Design, develop, and test active and passive lighting, lighting controls, and markings required for extra vehicular activity.

6. Crew station reviews

a. Develop and maintain an integrated plan for all crew station and flight crew related mockup reviews and S/C tests.

Plan shall include:

1. Schedules, as shown to be integrated with related S/C development and test.

2. Plans for the contractor's mockup use to support design reviews, flight crew reviews, and mission support. Plans to indicate method of supporting different S/C configuration(s) as dictated by various missions.

3. Status of design effort for support of each specific review, i.e., concept drawings, preliminary drawings, preproduction release drawings, etc.

b. Manage contractor's efforts to schedule, set up, and perform all crew station related reviews at the contractor's facility.

c. Prepare internal direction as required to affect results of all Crew Station Reviews.

d. Monitor various internal efforts to implement design changes to crew station to ensure proper integration, task completion, etc. Report to NASA actions taken to close out review action items.

e. Coordinate with NASA counterpart to ensure proper and timely authorization of changes, and assurance that contractor's action is authorized and appropriate.

Flight Crew Support Teams

An essential part of the crew station organization is a flight crew support team for each mission. At NASA-MSC, these personnel are assigned to the team from the Crew Station Branch, Flight Crew Support Division of the Flight Crew Operations Directorate. The team includes the following: a team leader, and for each S/C involved on the mission, a crew station engineer, systems engineer, and a crew equipment liaison engineer.[5] This team follows the assigned S/C configuration before Crew Compartment Stowage Review and, in effect, stays with the spacecraft and its flight crew until launch time. This team serves as the principal contact on specific S/C crew station status

[5] "Crew Integration Plan for Skylab," Revision A, prepared by Crew Station Branch, Flight Crew Support Division (Houston, Texas: NASA-MSC, October 1970).

and flight crew reviews. All crew station changes are coordinated with the team to keep them updated and to ensure that changes avoid design or schedule conflicts. This team also assures that the crew is aware of these changes and encourages early flight crew assessment of such. Whenever possible, a team member participates in Crew Station Reviews involving his S/C and is, at the least, informed of changes. Late changes to the crew station at KSC are coordinated with this team, and if the change is particularly troublesome, mockup or S/C demonstrations to the flight crew are arranged.

S/C Contractor Support Teams

Initially during the CSM development, the contractor was asked to provide a crew station manager to accompany the spacecraft to KSC and remain there until launch, which was done for the first few Apollo missions. In later missions, however, the contractor's KSC personnel were sufficiently trained, etc, so this function (which parallels the support team function) was performed by KSC personnel in coordination with the originating facility. However, the initial support from the contractor's facility proved significant and valuable, and should be required for at least the first few flights of any new S/C or complex. Throughout all important design reviews, particularly the Crew Compartment Stowage Review at the contractor's, NASA and contractor representatives from KSC participate. Familiarity with S/C prepacking and stowage procedures develops from these reviews. Also, minutes of crew station reviews are forwarded to the KSC personnel, to keep them abreast of the crew station status. Such participation and information are of long-range benefit to these personnel, and pay off when the S/C is shipped to KSC for checkout and installation.

Design Requirements and Configuration Control

S/C Design Requirements Documentation

Design requirements are specified in various documents during development. Initially, they are broad requirements in the contract and gradually change to reflect the S/C design. In addition to the Contract Statement of Work and contractual specifications, such requirements are included in Interface Control Documents, Contract Change Authorizations, technical directions, and design reviews.

Generally, when requirements are initially well defined, an acceptable product is received sooner and with less effort and cost. One generic weakness in many design reviews I have been involved in is the poor capability of participants to clarify reasons for a product's unacceptability; that is, what specific requirements they do want. Too often, for example, NASA rejects a S/C contractor's design because it does not satisfy NASA's requirements--it is surely a waste to wait for the finished product before discovering what is really wanted. A good set of initial design requirements is mandatory.

Contract Statement of Work

I. Definition/Description

The Contract Statement of Work is part of the initial contract and generally defines what the contractor is required to do, and the baseline mission and design requirements.

II. Function/Utilization

The Crew Station Plan discussed above should be included in this Statement of Work. If the program entails a new full-scale development,

the requirements for a crew station organization as defined should be included.

If the program is large enough and involves development of new S/C designs, mockup fabrication and reviews, a separate Mockup Plan should be required. This plan should be appropriately tied and referenced to the Crew Station Plan.

Appropriate aspects and portions of the Statement of Work for the LM-10 and subsequent Modification Program are provided here as an example of the kind of crew station related efforts and requirements this document should include:[6]

1. Specified requirements to prepare necessary general arrangement drawings, etc., in support of Critical Design Review (CDR).

2. Defined meeting and program review dates for: Preliminary Requirements Review, General Program Review, Preliminary Design Review, later General Program Reviews, CDR, and final Mockup Review.

3. Included trainers and mockups in plan submitted under Logistics and Support Plan and Mockup Plan.

4. Specified dates for the following documentation to be submitted: Organization Plan; Program Plan; General Test Plan; Master End Item Specification Part I; Contract Technical Specification; Master End Item Specification Part II; and the Performance and Interface Specification and Interface Control Documents (ICD's).

5. Included in mission requirements were:

---

[6]NASA Contract NAS 9-1100, Contract Change Authorization No. 2333, LM-10 and Subsequent Modification Program (Houston, Texas: NASA, Manned Spacecraft Center, Jan. 9, 1969).

The LM shall be capable of accommodating the following mission requirements:

- o Standby in quiescent condition for periods of mission environments noted below.

	First day of launch window	Second day of launch window
Prelaunch	25 hrs.	49 hrs.
Launch window + earth orbit	7	7
Translunar	110	110
Lunar orbit	48	24
Total	190 hrs.	190 hrs.

- o Lunar parking orbit characteristics
  - Altitude — 60 n.m. circular--60 x 10 n.m. --4 revolutions prior to landing.
  - Inclination — 0-45°
- o Sun angle at landing — 5-20°
- o EVA activity
- o Return payload weight — 175 lb.
- o Performance

The vehicle shall be designed to provide capability for performing any mission bound by the following four cases:

Payload delta Velocity and staytime

Case	1	2	3	4
Delta-Velocity (ft./sec.)	300	100	175	0
Open bay payload #	0	650	0	650
Other D/S payload #	350	350	350	350
Lunar staytime hours	54	54	78	78

The design effect of sun angles at landing above the 20° value up to 30° are to be determined.

6. Design requirements specified included:

   a. Structures and mechanisms

      (1) All modifications shall be incorporated as a block change on LM-10 and subsequent S/C. Changes shall be made inline as opposed to retrofit to the maximum degree practical.

      (2) LM-9 will be the reference baseline vehicle.

      (3) The modified LM shall be configured for a 78-hr. mission; any shorter mission capability will be obtained by offloading consumables.

      (4) One descent stage corner quadrant shall be available for payload stowage, in addition to the Scientific Equipment Bay; payload carried in the Scientific Equipment Bay will meet the present interface requirements. The payload for the corner quadrant is not yet defined. Pending such definition, GAEC shall identify hard points for attachment and mass moment characteristics permissible.

   b. Crew provisions

      (1) Provisions shall be made in the ascent stage cabin to provide suitable crew facilities for the longer mission and increased cabin activity.

      (2) An improved urine and PLSS condensate waste management system shall be provided.

      (3) Provisions shall be included for 11 Portable Life Support System (PLSS) recharges; each recharge will require 8.5 lb. of water, 1.2 lb. of oxygen, one battery (5.5 lb.) and one LiOH cartridge (6.8 lb.).

   c. Electronics

      Provisions shall be made for shirtsleeve voice communications.

   d. Fluids

      The ascent stage cabin environment shall be suitable for unsuited operations and sleep during time on the lunar surface. Shirtsleeve environment shall be as specified in prior NASA TWX.

7. Program requirements specified a mockup review as follows:

   LM-10 mockup review shall be held concurrent with the CDR. This mockup shall use existing GAEC hardware and primarily demonstrate stowage, habitability, deployable and erectable equipment and any crew interface items for ascent and descent stages.

8. Under design and analysis:

   a. A detailed structural analysis shall be performed to determine if structural elements exhibit positive margins of safety for the design loads and environments.

   b. Studies shall be conducted, designs, or mission changes recommended to provide a shirtsleeve cabin environment.

   c. The contractor shall develop, in conjunction with NASA, astronaut/vehicle interfaces, evaluate crew tasks and timelines, and establish the environmental and physiological considerations associated with habitability, crew comfort and safety. Studies shall be conducted to identify changes in the ascent stage cabin arrangement to meet the habitability requirements of the extended lunar stay mission. The contractor shall perform trade-off analyses and simulations to determine solutions to problems.

   d. Mass properties:
      Preliminary specification weights on new equipments shall be established.
      Detailed subsystem designs shall be monitored, and tradeoff studies shall be performed to ensure a minimum weight configuration.

   e. The contractor shall perform configuration studies to determine an equipment stowage arrangement in the descent stage quad areas for the additional expendables for up to 78 hours of lunar staytime, with emphasis on design features to accept large variations in mission payload weight or location.

   f. Crew provisions:
      The contractor shall provide for the stowage of additional crew provisions for the longer mission, an improved waste management system, and the incorporation of design changes resulting from studies to improve habitability of the Apollo LM cabin. Provisions shall be made to permit donning and doffing of constant volume suits.

> The contractor shall conduct the necessary design studies and engineering efforts required to provide stowage for the constant volume suits during the mission except for EVA activities. ICD's shall be generated jointly with AiResearch Corporation and Litton Industries for the constant volume suits.
>
> The contractor shall provide for storage of expendables for the Portable Life Support System (PLSS) and the cabin Environmental Control Subsystem to support a 78-hr. lunar stay and the Extravehicular Activities as defined in mission requirements. A deployable pallet, located in the descent stage shall provide for this expendable storage. Provisions shall be made for transferring equipment from the descent stage to the ascent stage. Modularized stowage concept is to be considered the primary mode of stowage for the ascent stage.
>
> Engineering drawings shall include inboard profiles, general arrangements of crew work and sleep areas, equipment stowage areas and pallets, and manufacturing drawings for crew provision details, assemblies and installations.
>
> The contractor shall assist in studies to improve habitability of the LM and the design of mockups to develop and optimize crew/vehicle interfaces.

Particular attention should be given to the detail and wording of the Statement of Work requirements. Care should be taken not to be restrictive, limited, or biased by this information. Meister, in studies relating to the use of Statements of Work by design engineers, found the primary information source for the design engineer is the Statement of Work, despite its tendency to contain the most general requirements and the least specific information.[7] As a rule, the document should include known and justified general performance and design requirements. Where several alternative requirements are available, it is best to define them and request the contractor to provide tradeoffs and recommend alternatives.

---

[7] David Meister, Human Factors: Theory and Practice (New York: Wiley-Interscience, 1971), pp. 261-62.

Figure 14 is an overview of the various design requirements in the spacecraft development program. It also indicates how these requirements relate to design reviews.[8]

Contract Specifications

I. Definition/Description

A sample of the Apollo Program Specification tree is provided in Figure 15.[9] Figure 16 is a representative specification tree at the MSC level.[10] The following discusses the specifications required at the MSC level on a given S/C contract.

1. Apollo program and technical specification:

The Apollo Program Specification shown in Figures 15 and 16 contains technical requirements for the entire program. Lower-level technical specifications contain requirements for the projects and systems. Both types of specifications relate to the following:

a. Mission requirements, identification and description of the program.
b. Program performance requirements
c. Performance budgets
d. Standard requirements applicable to contractor designs
e. Program qualification and test requirements.[11]

---

[8] Modification of figure as provided in Apollo Configuration Management Manual, NHB 8040.2 (Washington D. C.: NASA, January 1970).

[9] Apollo Program Specifications, J-Missions, SE 005-001-1-Revision C (Washington, D. C.: NASA, April 1, 1970).

[10] Apollo Spacecraft Program Configuration Management Manual, SB07-C-001 (Houston, Texas: NASA-MSC, December 15, 1967), p. 3-2.

[11] Apollo Configuration Management Manual, ibid.

Figure 14. APOLLO DESIGN REQUIREMENTS IMPLEMENTATION

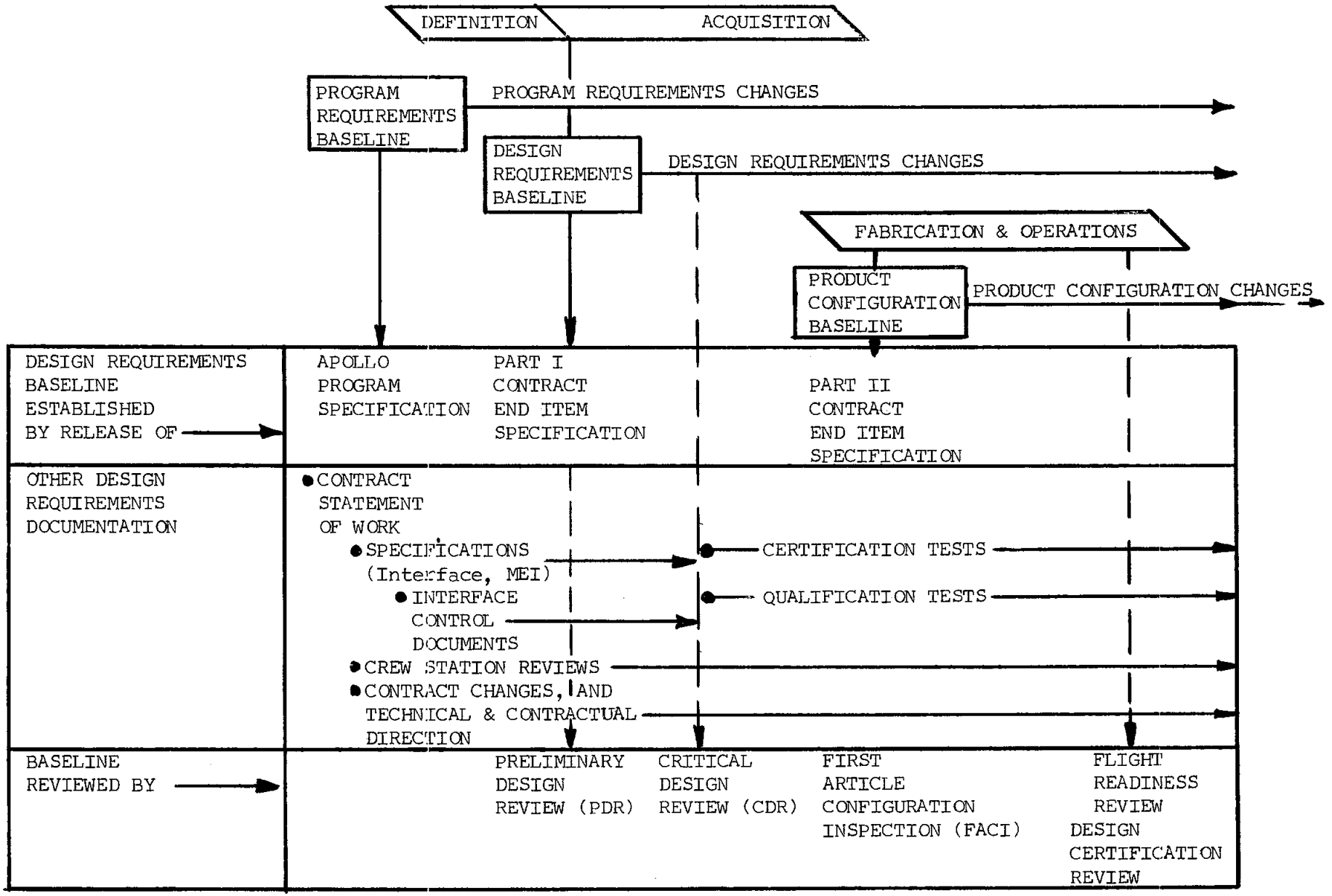

Figure 15 APOLLO PROGRAM SPECIFICATION TREE

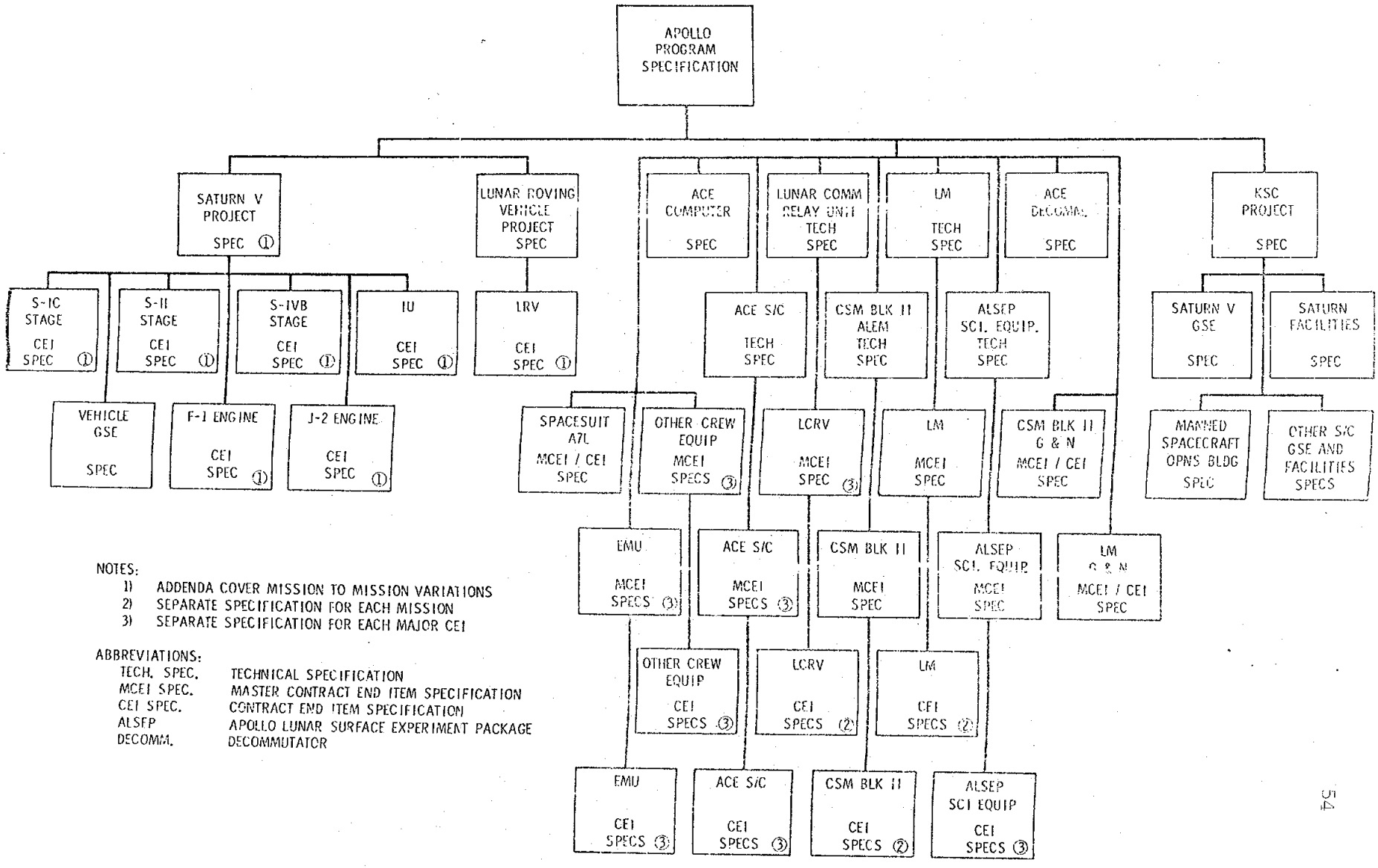

NOTES:
1) ADDENDA COVER MISSION TO MISSION VARIATIONS
2) SEPARATE SPECIFICATION FOR EACH MISSION
3) SEPARATE SPECIFICATION FOR EACH MAJOR CEI

ABBREVIATIONS:

TECH. SPEC.	TECHNICAL SPECIFICATION
MCEI SPEC.	MASTER CONTRACT END ITEM SPECIFICATION
CEI SPEC.	CONTRACT END ITEM SPECIFICATION
ALSEP	APOLLO LUNAR SURFACE EXPERIMENT PACKAGE
DECOMM.	DECOMMUTATOR

Figure 16

NASA-S-71-2312-V

REPRESENTATIVE APOLLO SPACECRAFT SPECIFICATION TREE

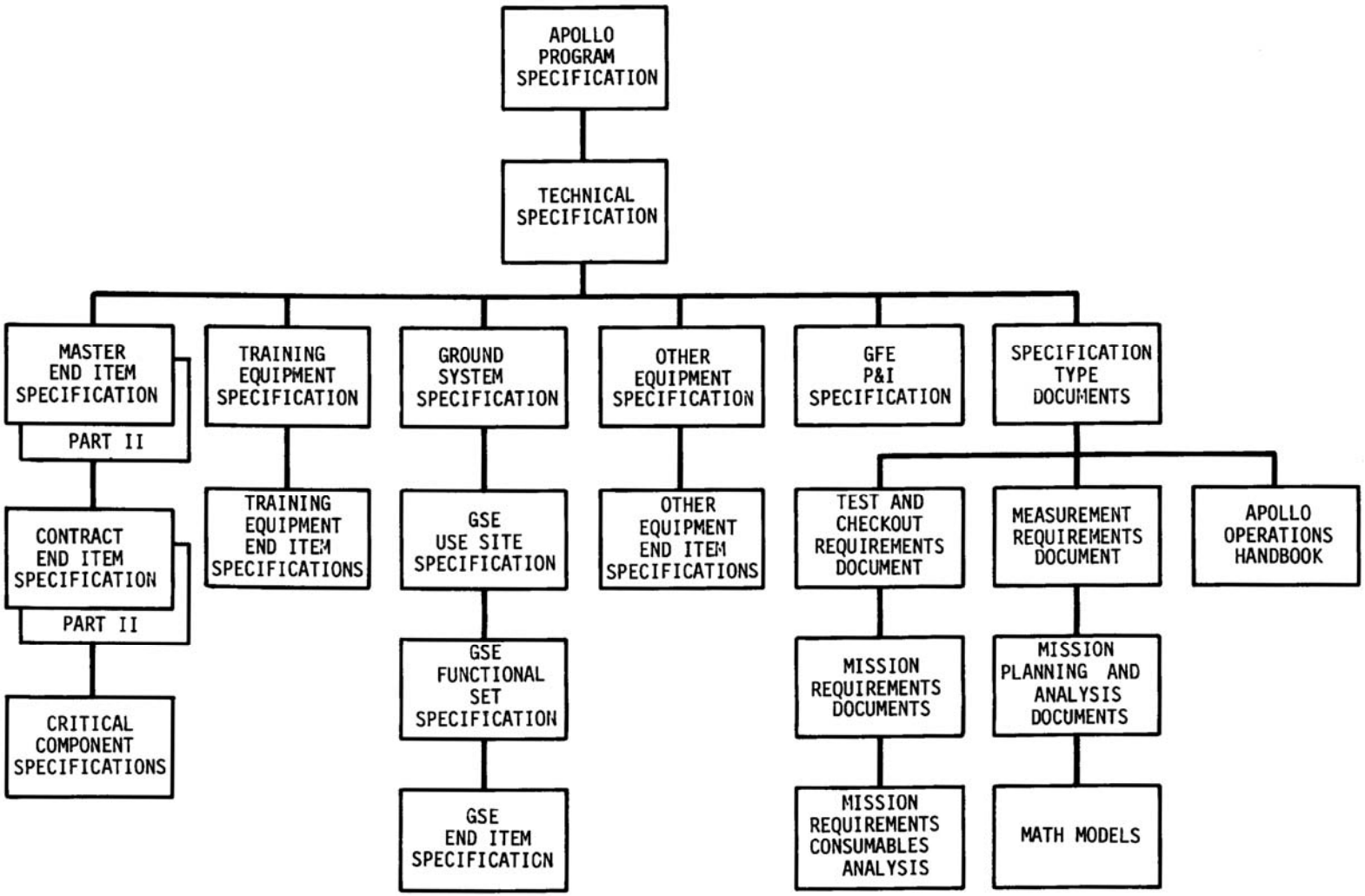

Technical specifications define the primary requirements for all contractors' equipment, including spacecraft, training, ground support, and other equipment, as needed. Emphasis is given to the definition of functional and performance requirements and intercontractor interface requirements.[12] The contractor is required by the Statement of Work to prepare this document for NASA approval.

2. Master end item (MEI) specification:

The MEI specification defines the technical requirements of the master or basic design.[13] Such a specification was required for the two original S/C in the Apollo Program, Block I and Block II. (The Block I S/C was basically a S/C designed for earth orbital missions and the Block II S/C for lunar missions.)

3. Contract end item (CEI) specifications:

The CEI (prime equipment) specification provides designs, development, test and acceptance requirements for a single CEI type-model-series which cannot be defined by the simple formats of an identification or requirements specification. The CEI specification has two distinct parts used in the contractual control of CEI acquisition. Part I is a product of a Program Definition Phase or requirements analysis, and is the engineering instrument used to contract for design and development of the CEI. Part II of the CEI Specification

---

[12] Apollo Spacecraft Program Configuration Management Manual, ibid, p. 3-3.

[13] Ibid.

is a product of the design and development contract; Part II specifies the CEI for the product configuration requirements of the item qualified (or to be qualified) under terms and conditions of the design and development contract.[14]

Part II of this specification is used in the review of the CEI product during the First Article Configuration Inspection.

4. Other specifications:

Unique specifications are generated for components of a CEI which are considered critical. Training specifications define the equipment and technical requirements which control each end item of the training equipment.[15] In addition, GFE Performance and Interface Specifications are used to define S/C requirements for the accommodation of GFE items. These specifications are discussed in detail later.

II. Function/Utilization

1. Apollo program and technical specification:

As an example of the detail level of such a specification, the original technical specification for the CM included the following couch requirements:

Couches--"Couches shall be designed to provide comfortable support during all mission phases. All three crew couch seat pans shall fold to the extent required, to provide necessary work space and adequate access by the crew to all regions of the CM as required."[16]

---

[14] Apollo Spacecraft Program Configuration Management Manual, op. cit., pp. XVII-5.

[15] Ibid.

[16] Command and Service Module Technical Specification, Block I SID 63-313 (Downey, Calif.: Space and Information Systems Division North American Aviation, Inc., NASA Contract NAS 9-150, revised February 22, 1965).

Couch requirements are provided as an example of the detail level used in other specifications. The information contained in these detailed specifications will encompass the changes from iterative reviews and, therefore, reflects the hardware requirements and final configuration. Such information would obviously have been used during the original Technical Specification had it been available. Experience in the space programs should permit a more detailed definition of such requirements. These should be used only when one is sure of the product desired. Otherwise, undue design constraints may be imposed and cause costly redirection of effort and design.

2. Master end item (MEI) specification:

As noted, this specification applies to technical requirements for the master or basic design. In the CM MEI, the basic requirements for the Block I couch assembly are further defined as follows:

3.4.1.1.2.4.3 Crew Couch Assembly.--The three crew couches shall be constructed as a unified configuration. The unitized crew couch shall be a three unit assembly, mechanically assembled when installed in the CM. The crew couches shall be designed and constructed so that no components shall inadvertently become loose. All controls to the couch mechanisms shall be accessible to the crewman and there shall be no free-floating components at zero "G". The couch design shall permit use of space aft of the left and right couches as sleeping stations. The couch assembly shall be as light as possible and still withstand limit loads with no yield, and shall withstand ultimate loads of 1.5 times limit load without failure. The crew couch design and basic goemetry shall be as shown in Figures 6 and 6A. Provisions shall be made for temporary attachment of Ground

Support Equipment (GSE) checkout gear to the aft side of the main couch structure, aft of the outboard couches, during prelaunch operations.

3.4.1.1.2.4.3.1 General Design Features.--The crew couch assembly shall be composed of the following components:

a. Main Structure--The main structure shall be constructed of conventional machined and sheet metal parts forming a torque box to efficiently carry loads. A portion of this structure shall function as back rests for the crewman.

b. Leg Support Assembly--This shall include a non-adjustable foldable foot support, a movable foot restraint, and a rigid leg-thigh support.

   The movable foot restraint shall consist of manually operated straps mounted to the foot support.

   The leg-thigh support shall be hinged to the seat pan. The leg-thigh support surface shall normally have a 168-degree open angle relationship to the seat pan for all seat pan positions except for stowage access. To facilitate access to stowage areas, the leg-thigh support shall be adjustable to a 138-degree open angle relationship to the seat pan.

c. Seat Pan--The seat pan shall consist of a pan supporting the crew-man's buttocks, hinged to the back rest and capable of being adjusted to achieve open angles of 108 degrees (launch, entry, and comfort positions), 182 degrees (navigation position) and 276 degrees (LEB access position) relative to the back rest.

d. Head Rest--The head rest shall be designed to accommodate the Apollo Block I, spacesuit helmet. The headrest sides shall fold to a relatively flat position for side vision and ease of egress from the ingress to the couch. All head rests shall rotate aft to facilitate egress from the ingress to the CM.

e. Arm Rests--Arm rests shall be provided for the outboard couches. A fitting shall be provided for each arm rest to support either rotational or translational controllers. The arm rests shall be designed to provide length adjustments to accommodate control operation in a pressurized spacesuit. The arm rests shall be capable of being removed and stowed when not in use.

3.4.1.1.2.4.3.2 Crew Couch Assembly Performance.--The crew subsystem shall adequately support the crew during all phases of the mission, including landing impact and recovery period. The couch shall provide a platform for the performance of various crew tasks. The crew couch subsystem shall be capable of providing full body and hand support for the three crewmen during all nominal and emergency conditions. The couch shall be capable of withstanding acceleration forces during boost and re-entry, and attenuation loads upon landing impact. The crew couch subsystem shall permit the crewmen to interchange positions and accommodate the crewmen in either pressurized or unpressurized Apollo Block I Type spacesuits. The couch assembly shall support the crewmen in a position that will provide optimum reach and visual capability in relation to the control and display panels and the forward viewing windows. The couch assembly shall be capable of headward travel to facilitate vision through the viewing windows. Individual seat pan and leg support assemblies shall be adjustable for crew comfort and to provide maximum work space and access to equipment bays.

3.4.1.1.2.4.3.3 Crew Couch Assembly Interface.--The crew couch assembly shall interface with the attenuation system, the crewman's spacesuit, crew restraint system, and the GSE carry-on checkout equipment.[17]

3. Contract end item specification:

The CEI specification, Part I, will contain the level of requirements known at the time prior to the design and development of the specific item. This specification is normally reviewed and approved at the Preliminary Design Review. Part II of this specification contains acceptance test, detailed product configuration, and qualification requirements. It serves as a basis for approval of the hardware item at the Phase III Contractor Acceptance Readiness Review (CARR) which is conducted prior to hardware

[17] Specification Change Notice Number 197A-21a, Command and Service Module Master End Item Specification SID 64-1237, Block I, CCA 797 NASA Contract NAS 9-150 (Space and Information Systems Division North American Aviation, Inc., April 18, 1966), pp. 1-3.

shipment. This Part II specification will define the item in greater detail than illustrated by the couch portions of the MEI specification above; it will also reflect officially approved and implemented changes to the Part I specification.

S/C Configuration Control

In developing the S/C crew station, it is important the configuration be adequately defined and controlled. Such control is essential to the complex interrelationship between the flight crew and S/C hardware and systems. Integration is important to habitability. Stowage items, and other hardware related to crew support and operations, are hardware items which have varied more than any other. Changes in the items stored onboard, or additions/deletions of items, greatly affect not only ancillary hardware, but other control documents, drawings, etc. Such changes, even minor ones, have a "domino effect" on hardware and documentation and cause accelerating expenses. This section describes and discusses how configuration changes are made and the key tools used in defining and controlling S/C configuration and hardware.

Configuration Control Board and Panels

I. Definition/Description

The Apollo Configuration Control Board (CCB) at MSC was established under authority of the Apollo Program Director, as set forth in the Apollo Configuration Management Manual, NHB8040.2, January 1970. This board consists of key management personnel who have authority over all changes to the Apollo Command and Service Modules, Lunar Modules, and

other Apollo Program hardware. Certain subsidiary boards or panels are delegated responsibilities by the CCB chairman. The structure of the CCB and subsidiary panels is illustrated in Figure 17. The CCB basically functions to implement the following:

1. Issues approval or disapproval of changes which: (a) affect or cause an interface between two or more Configuration Control Panels, (b) affect spacecraft mass properties, (c) increase contractor cost in excess of $300,000, (d) affect each flight vehicle, (e) affect end item delivery dates, and (f) involve a revision to contractual or agreed to in-plant or KSC/MSC test requirements, and test plans which also affect an end-item delivery schedule or launch date.
2. Takes a position on all NASA Headquarters level CCB changes and forwards a recommended disposition to the Apollo Program Director through channels.

Configuration Control Panels have authority for all changes not designated for CCB or high-level action. These panels have responsibility for control of flight hardware configuration ground support equipment, related software and control documentation, and revisions.[18]

---

[18] Apollo Spacecraft Program Configuration Management Manual, op. cit.

Figure 17. CONFIGURATION CONTROL BOARD STRUCTURE

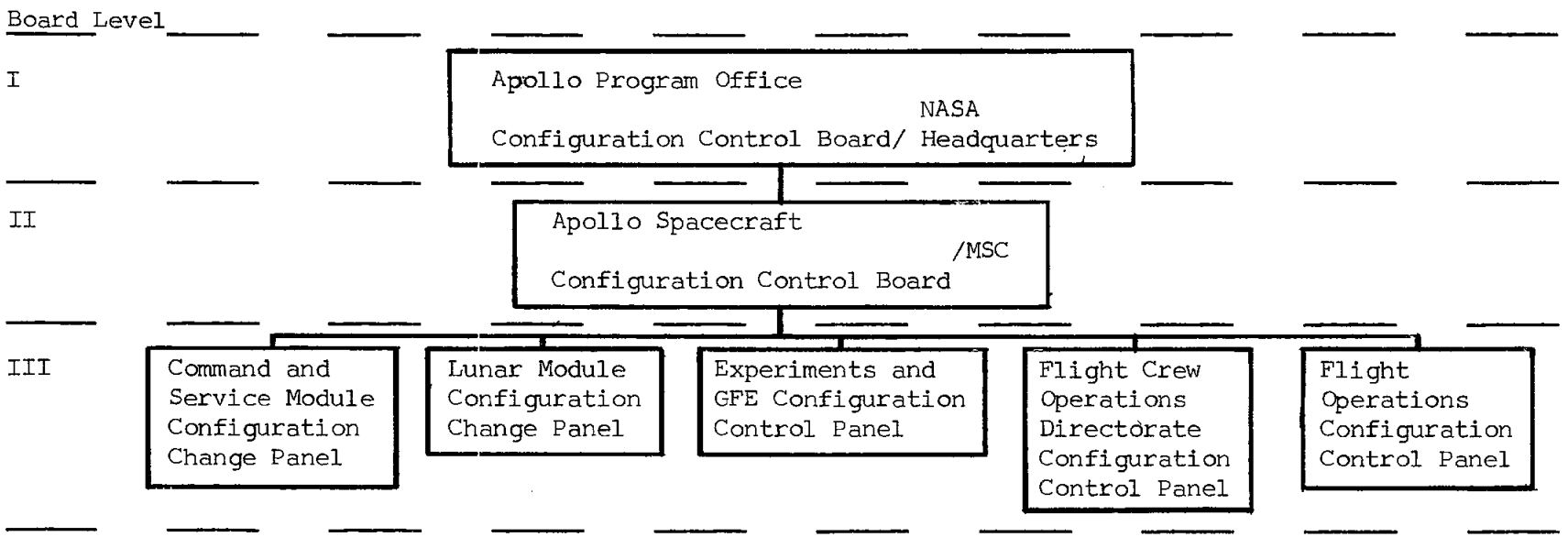

Sources: Apollo Spacecraft Program Configuration Management Manual, SB07-C-001 (Houston, Texas: NASA-MSC, December 15, 1967), p. 5-2, modified.

Skylab Program Configuration Management Plan, MSC-01160A (Houston, Texas: NASA, Skylab Program Office, MSC, October 1, 1970), pp. 4-6, Figure 1, modified.

II. Function/Utilization

From the crew station standpoint, this board and the panels are the sanctioning authority for S/C stowage, stowage list, and individual equipment configuration changes, and changes to the baseline configuration. Crew station personnel play an active role in presenting these changes, in a critique of their effect on the crew station, and in determining stowage location or other provisions to be implemented.

Since the crew station involves crew interface with hardware to be operated or used in flight, support of the appropriate panel affecting changes to this equipment is required. This support has also proved effective in identifying areas of change which, in turn, affect the spacecraft by impacting stowage or other crew interfaces.

Prior to when S/C additions are presented to the board, a good deal of coordination occurs between the contractor and NASA crew station personnel. If the item added is GFE, the contractor is provided with appropriate information for its use and stowage onboard. Where possible and advantageous, stowage of the item is resolved prior to the CCB meeting, and presented as part of the change. If the item mates with the S/C, or otherwise involves further development and definition, only the feasibility of its S/C accommodation is presented. If the change is approved, the resulting direction includes a requirement for the contractor to coordinate stowage and other details with his NASA crew station counterpart.

When important changes to the crew station occur immediately before flight, it is essential the flight crew be aware of these and be in

basic concurrence with their implementation. These changes can significantly affect the training and psychological readiness of a flight crew who have been with a given spacecraft configuration for months. In such cases, it is important that NASA and the contractor's crew station personnel resolve the technical implementation to their mutual satisfaction before final presentation to the flight crew. The board normally dispositions approval of such changes, with the qualification that physical incorporation into the S/C shall be withheld pending NASA flight crew review and concurrence, based on their review in a mockup or the spacecraft.

Proposed design changes which involve major crew station implications may be approved for study by a S/C panel as a Request for Engineering Change Proposal. This authorization allows the contractor sufficient time, manpower, and funds to accomplish a comprehensive study of the proposed change, including assessment of its impact on cost, hardware, documentation, and delivery schedules. This study is then officially sent to NASA as an Engineering Change Proposal and includes the contractor's recommendations on whether the change should be approved. The proposal is then reviewed by the change panel and board if required for disposition. This technique is a preferred one, if time permits, as it provides for a thorough investigation of the implications to a change prior to approval.

Spacecraft/Mission Stowage Lists

I. Definition/Description

The stowage list in the Apollo Spacecraft Program documents all the stowed and installed operational and experimental equipment, crew

apparel, and crew-worn equipment carried onboard. It is the only working document which reflects the approved stowage requirements and basic stowage configuration. A separate list is provided for each Apollo mission. It includes all loose, removable stowage items, stowage containers or lockers which are prepackaged with equipment prior to installation in the S/C, and other crew support equipment installed with minimal technician effort (i.e., oxygen hoses and masks, water guns and hoses). In this latter category, items generally included are those which are fragile, sensitive, or which are otherwise susceptible to damage or contamination during normal ground checkout operations. Items which are physically moved during the mission by the crew from one location to another are included on this list. A sample portion of the Apollo 9, Mission AS 504, CM 104/LM-3 stowage list is provided in Appendix A.

Each stowage list item is assigned an item number and contains nomenclature and part number which correspond to the item's drawing title and number. The quantity of each item is also defined. Part numbers include applicable dash numbers of the part number, which signify minor configuration differences between like part number items. For example, utility towels were listed on the Apollo 9 mission as items number B0105, B106, and B107, respectively. Their part numbers were the same, SEB42100079, except their dash numbers were -204, -205, and -206 corresponding to red, white, and blue coded towels. The nomenclature listed denotes these colors behind "Utility Towel Assy.CM" to distinguish the items.

The list is subdivided by pertinent mission phase. For example, List A defines CM earth launch stowage; List B, LM earth launch stowage; List C, CM-LM transfer; List D, LM Lunar launch stowage; List E, LM-CM transfer list; and List F, CM Entry Stowage. These subdivisions represent the major S/C stowage and stowage transfer configurations and reconfigurations.

Equipment on each of these lists is subdivided into sections as follows: stowed operational Government Furnished Equipment (GFE), crew apparel, stowed operational Contractor Furnished Equipment (CFE) and stowed experimental GFE. These subdivisions denote hardware suppliers for the equipment and the apparel worn by the crew during launch.

The stowage list also defines the stowage location of each of the items listed by mission phases, as noted above. Stowage locations note the locker or compartments where equipment is stowed, the item to which it is attached, or the specific location where it is installed. It may also indicate the item is stowed within a specific bag which is, in turn, stowed in a defined compartment. In some cases, like items are stowed in more than one location, and then the quantity stowed is denoted by location.

For each piece of equipment, a unit weight is specified, which represents the best available data on the equipment's weight at the time of stowage list release. Weight of the actual flight hardware is included, where known.

Characteristics of Material (COMAT) approval status is included. The COMAT system is one which categorizes materials approval. The status is

noted as A-approval, P-pending approval, O-open (no COMAT submitted), M-metal (no COMAT required) or W-waived.

Usually, a Stowage List Revision Notice (SLRN) is attached to each list, summarizing changes from the previous edition. All changes are noted in the standard stowage list format, the reason for the change and effective date. Appendix B is a sample Stowage List Revision Notice.

In addition to using stowage lists for the Command and Lunar Modules (including ascent and descent stage stowage), lists have been used for the Modular Equipment Transporter System (METS) and the Lunar Roving Vehicle (LRV) used on Apollo Lunar Missions. Lists are required for these hardware transporters since they carry a sufficient quantity of stowed equipment onboard--enough to merit an individual list. The function of these lists is to control the hardware and their interfaces during prelaunch fit and function tests only, not equipment handling and arrangement during lunar traverse. Equipment handling and arrangement during lunar traverse are handled by the appropriate operational procedures for lunar surface operations.

Up to this point, only the stowage list used in the Apollo Program has been described. In the Skylab Program, modifications to this basic format have been made to accommodate the numerous launches, various modules which are used in the overall mission, and other Program management decisions. A sample of the Skylab list is provided in Appendix C.

II. Function/Utilization

1. General:

The Apollo stowage list serves as the top level configuration control document to define and control the officially approved equipment to be stowed for a given mission and the stowage location and, therefore, basic stowage configuration of these items within a S/C. It is a widely used and distributed document and is the only effective, official summary of the stowage provisions. It is widely used by the contractor to verify the S/C's stowage provision correctness, check part numbers, and control internal stowage documentation, drawings, etc. The GFE suppliers use it as a baseline for what equipment they have to provide, its approved part number, etc. It is even used for identification of shipped GFE. (Stowage list item number, nomenclature of the item, part number, etc., are recorded on the shipping package.)

2. Preliminary stowage lists:

In the early stages of S/C development, preliminary stowage lists are prepared in coordination with the contractor and the various NASA/GFE suppliers. These lists are sent to contractors over contracting officer's signature to be used for S/C development. They, in effect, coincide with and reflect the development of the S/C and its stowage provisions. Each list serves as a key source of interface requirements, i.e., it

defines the GFE which interfaces with the spacecraft. Equipment requirements, both GFE and CFE are, therefore, defined as well as can be at this time.

In some cases, the requirement may exist for a hardware item that is only a concept which has no configuration definition. For example, if a bracket to hold a camera is required, it is listed by general nomenclature, until it is designed and assigned part numbers, etc. Food and other expendables reflect the best approximation of quantities and types as required to satisfy the mission definition, duration, and other defined requirements. At this stage, since the items to be stowed are rather poorly defined, the provisions to stow them or to mate with them are also poorly defined. When a bracket is added to stowage, it may require a special stowage cushion, or bag, retention straps, etc., which may need to be on the official stowage list if it classifies as a list item. As the S/C and S/C equipment design/development evolves, appropriate additions, deletions, or corrections are made to this preliminary list. These lists are a means for establishing the basic overall stowage capability requirements.

Appendix D includes portions of two internal NASA memoranda which denote sample format and content during development of such lists on a Lunar Module Modification Program (LMMP) effective for S/C LM-10 and subsequent S/C.

This program was a redesign effort to accommodate longer lunar stay-time by the LM, increased stowage provisions in the ascent and descent stages of the LM, basic modifications for a Lunar Roving Vehicle, and increased scientific payloads.

3. Official stowage lists:[19]

The initial, formal stowage list for each spacecraft reflects the best S/C contractor and NASA understanding of CFE and GFE stowage and loose equipment requirement at the time of release. The iterations through which the preliminary stowage list has progressed make it a good baseline. It serves as the document to which all changes are made. This list and any changes are approved and maintained through the Program's Configuration Control system, which in Apollo required the Apollo CCB's approval. After approval by the CCB, the list is transmitted to the contractor as an official document, under Contract Change Authorization (CCA).

The stowage list is also simultaneously issued to appropriate NASA suppliers of GFE to provide appropriate GFE in support of that S/C. After initial release of the stowage list, additions which affect form, fit, function or interfaces, impact S/C schedules, or exceed a defined cost, must be approved by the Apollo CCB. If a new item is proposed to be added, it is presented to the CCB for approval. If approved and it is a new item to be provided by the contractor, a CCA is issued to the contractor to

[19] Op. Cit., NASA letter PM5/L696-67, from Kenneth S. Kleinknecht to Dale M. Meyers, May 10, 1967.

design, develop, qualify and provide flight hardware items, and other effort, as necessary, to support flight use of this item. The contractor is directed to provide for stowage of this item and to change and appropriate stowage drawings, etc., to accommodate its addition.

The CCB paperwork authorizing issuance of a CCA to the contractor also directs the appropriate NASA organization which maintains and issues the stowage list to modify the list as required to accommodate the new requirement. If the approved change authorizes addition of a GFE item, the CCB paperwork will authorize the item's design, development, flight hardware provisions as required to support its addition to the mission. The contractor is directed by CCA to provide stowage for the item, stow it on the appropriate S/C, and to prepare appropriate interface control documentation. The stowage list is changed accordingly. In a number of cases, when the addition of GFE or CFE is made, authorization is implied for stowage or other interface provisions needed to accommodate the addition. When such items are required and identified they are added to the list under the initial CCB authorization.

Items to be deleted from the S/C, or modified to change their basic configuration, are handled by CCB disposition as with S/C additions. The CCB actions authorize additions, deletions, or changes in hardware and are reflected in an appropriate stowage list change. A number of changes are

accumulated, until they are significant enough to merit definition by a stowage list revision, or they are documented by the usual revision issues. (Usually there are weekly updates later in the program.) Changes to the baseline list, which may be accomplished by a stowage list revision alone, reflect the following: minor discrepancies and errors in nomenclature, part numbers, etc.; changes to correct drawing errors; alleviation of difficulties during design or manufacturing; changes to CFE configuration necessary and within the scope of NASA authorization; and other changes in details which do not change form, fit, or function of the end-item hardware. The stowage list itself does not provide or define authority to change equipment part numbers, weights, or stowage locations.

The necessity to change the stowage lists may be dictated by any of the following type situations: mission requirements variation; tests, Crew Station Reviews, and training experience; crew sizing changes; material and weight changes; interface definitions and changes; and crew preferences.

When the contractor has a proposed change to the stowage location of hardware, as defined in the official list, the proper procedure for processing this change is for the contractor to submit the proposed change via an Engineering Change Proposal (ECP) to NASA. The CCB or

designated CCB authority will then approve or disapprove the change and direct the stowage list be changed as required.

The above procedures describe how stowage list changes are made and indicate some basic reasons why changes are made. An implicit intent of these procedures is the maintenance of control over stowage locations. Such control is essential for ensuring an efficient and orderly stowage configuration, and provides for NASA management of an area which affects crew training, training hardware, crew proficiency, and in-flight stowage management.

4. Time of issuance:

The initial baseline stowage list should be issued no later than four weeks prior to the Critical Design Review (CDR) that affects that S/C or series of vehicles which are similar to that S/C. During the 1967 Apollo redesign effort, the CDR affected the basic configuration of S/C 101, 103 and subsequent spacecraft. For these vehicles, which were initially identical, a list was issued which was effective for S/C 101 and subsequent vehicles. This baseline list was then superseded for each separate S/C by appropriate issuance of a new list applying only to this spacecraft. As specific missions became defined, spacecraft and stowage differences became known, and the stowage lists changed accordingly. Since the Crew Compartment Stowage Review (CCSR) for each S/C was the first mission-oriented review of the stowage configuration, the significant stowage and

list disturbances begin after this review. To allow sufficient time for preparations of mockups and stowage hardware of the proper configuration, the S/C stowage list should be issued at least four weeks prior to the CCSR. In addition to the normal revision cycles, revisions are specifically required at specific times:

1. At least three weeks before the Crew Compartment Fit and Function test.
2. At least three weeks before stowage for simulated and manned altitude chamber testing of the flight S/C.
3. Two weeks prior to final stowage exercise at the launch site (KSC).
4. Concurrent with the Flight Readiness Test prior to launch.

Stowage Drawings

I. Definition/Description

A stowage drawing is the S/C contractor's control drawing for each flight S/C. It depicts in three dimensions the general S/C stowage configuration for prelaunch and throughout the mission, where key stowage changes are made. "Exploded" isometric views are used to clarify the stowage of items. These list each item of stowed equipment per the approved NASA-contractor stowage list and describe, in detail, how to stow these items during various mission phases. There are stowage drawings for each major functional S/C area where a large number of items are stowed, e.g., the CM intravehicular crew station, LM ascent stage intravehicular crew station, and LM descent stage, Modularized Equipment Stowage Assembly (MESA).

Appendix E provides an entire CM Stowage drawing. Appendix F includes portions of a LM stowage drawing for the ascent and descent stages.

II. Function/Utilization

The stowage drawing is a vital document which details the actual S/C stowage. It also serves the following key functions: (1) provides a single, extremely handy tool for configuration control over stowage; (2) serves as the technical basis for stowing the S/C for ground tests and flight; (3) is the accepted basic reference for quality control inspection and verification of stowage; (4) serves as a review item at the S/C's Crew Compartment Stowage Review (CCSR) and for reference at other crew station reviews; (5) is a training device for the flight crew, crew station, and procedures personnel; and (6) serves to familiarize other personnel with prepacking and stowage procedures.

A general requirement of the stowage drawings is they must define the specific installation and stowage requirements so any qualified engineer and inspector can stow the vehicle or verify that stowage is correct as per drawing.

Other requirements of the stowage drawings are:

1. Identifies and locates the full complement of stowage volumes (e.g., compartments, lockers and containers) in the flight S/C; each stowage volume is defined by location, not by item stowed. Stowage volumes are coded to simplify stowage designations and communications about them.
2. Lists all equipment stowed onboard by part number, nomenclature, quantity, and defines stowage location. Reflects all approved stowage list changes, including

those items brought into the S/C during mission and those "off-loaded." Depicts these items on the drawing by "leaders" to ensure identity.

3. Depicts by illustration, stowage changes where differences exist for successive mission phases.
4. Defines and illustrates specific handling, folding, or other installation procedures or cautions as required to satisfy pertinent Interface Control Document requirements or stowage/installation requirements for each item. Depicts stowage orientation and routing so these requirements are clearly understood.
5. Defines and illustrates location of prepackaged stowage containers in their installed position. Provides appropriate installation information in referenced specifications, instructions, torque values, etc.
6. Defines and illustrates method and procedures for stowing contents of these prepackaged containers within the containers, showing the relationship between each item.
7. Includes caution on use of items relative to shelf-life limitations.
8. Denotes stowage related decals to be installed on the various stowage containers and compartments. Defines and locates decals particularly pertinent to stowage operations, such as the stowage location of lithium-hydroxide canisters.

9. Defines fit check requirements for mating items in prime launch location, and in alternative S/C stowage or use locations.

10. Provides differentiation between stowed item and installed item, with reference to CFE part numbers where the stowage shown requires such definition.

The S/C stowage drawings are used by the contractor as the baseline for preparing Operational Checkout Procedures (OCP's) for prepackaging, stowage, and removal and inventory of the crew station stowage equipment. These documents include step-by-step procedures for prepacking and stowage of each item, documentation of serial number, and NASA and contractor inspection "buyoffs" of the procedures used. The stowage drawings must provide sufficient information for writing installation procedures.

In May, 1969, a review of LM ascent and descent stages stowage drawings by NASA-KSC personnel indicated these drawings lacked enough detail to provide instructions for the performance of crew stowage exercises at KSC. The inspectors experienced difficulty in assuring the hardware was properly oriented and adequately secured. There was difficulty in verifying, in effect, that stowage was "per print."[20]

---

[20] NASA-MSC TWX PD8/T852-PPG-69-1441 written by J. R. Goodman, revised by C. H. Bolender to Grumman Aircraft Engineering Corporation, Attn. R. H. Tripp, LM Program Director, from NASA-MSC LM Project Office, Apollo Spacecraft Program Office, Subject: NASA Contract NAS 9-1100, Stowage Installation Drawings, LM6 and Subs, June 11, 1969.

As a result, the LM contractor spent considerable resources revising these drawings to satisfy the above criteria and other format recommendations by NASA.

NASA was also concerned at this time that the LM stowage procedures were not adequately documented to allow stowage by "any qualified engineer and inspector." The LM S/C contractor's capability in this area relied heavily on a single representative at KSC--which was too great a risk. The revisions made to these drawings permitted other qualified personnel to effect S/C stowage without a good deal of knowledge and experience.

Stowage management aboard the Apollo S/C has become more complex and involved with each mission. In long flights, the stowage drawing or some reasonable facsimile will no doubt be a necessity for "real-time" stowage management and housekeeping. In the Skylab Program, a Skylab Rescue Mission Stowage List is in preparation, and a Preliminary Design Review on the effects of this mission on the CM has been held. Should such a mission become a sanctioned contingency, the stowage drawing or special addition will probably reflect resulting stowage alterations and might also be carried onboard.

Spacecraft Configuration Baseline

An essential byproduct of the many design reviews held on the S/C is establishment of a baseline configuration for hardware items and systems. Throughout the review cycles (which is described later), it should be clear what specifically is under review and its disposition

recorded in review minutes. This policy should exist for all formal reviews and semiformal Crew Station Reviews. In this way, both NASA and the contractor have a clear definition of configuration approvals and any items considered for subsequent approval. This policy also helps resolve proposed "in-scope" vs. "out-of-scope" changes and the cost of these. The items reviewed consist initially of design requirements and specifications and later design layouts, mockups, near-complete hardware drawings, released drawings, and flight configured hardware. The result is an approved baseline, with revisions from these reviews, the CCB, or other authorizations.

This review includes, in effect, some essentials of the stowage list, for stowage locations, changes in quantities, deletions, etc., or design changes which reflect a change to a part number on the list. The role of stowage lists in reviews is often not understood. These reviews, in effect, approve or modify the design of all S/C and appropriate GFE items up for review, a number of which are not included in the stowage list. The list only reflects what loose items are stowed onboard and does not control their design, or the design of the many other items and features of a S/C not covered by the list.

Serialization

I. Definition/Description[21]

Serialization is the assignment of serial numbers to all engineering-critical and logistic-critical components of a contract end item by

[21] Apollo Spacecraft Program Configuration Management Manual, op. cit., pp. X-11.

drawing and part number. The following guidelines apply to its use:

(a) Serial numbers shall be permanently assigned in sequence within the drawing number.

(b) A new sequence shall not be assigned when the part number is changed to identify a noninterchangeable design.

(c) The number of a reworked or retrofit item shall not be changed, even though the item has been given a new number.

Parts other than critical ones may be serialized at the contractor's option.

II. Function/Utilization

Serialization is an important tool for the control of crew equipment, etc., that make up the crew station. It allows identification and traceability of specific hardware items which have been used for critical fit and function checks, and formal flight crew reviews. It allows one, therefore, to be able to specify the exact item one wants from a shelf full of like items. In the integration of such items with the S/C, it is essential that records show which items were used for critical fit and function checks. Although comparable items are supposed to be interchangeable, there are times when this is not so. At times, there are peculiarities between mating items which account for some electrical connectors mating readily, while items of identical part number mate with difficulty. In addition, the characteristics of items such as batteries, flow valves, portable life support systems, etc., vary enough among items to merit a detailed performance record. In the case of the Extravehicular Mobility Unit (Space Suit Assembly) used on the lunar

surface, such data are known, published, and used during actual missions.[22] Serial numbers are included in the data for the Flight Readiness Review and other S/C reviews.

Before flight of the first manned Apollo CM, it was discovered the contractor had no plans for serialization of crew station items. Serialization was then imposed by contractural direction, and proved essential for crew station monitoring and control.

At times, critical orientation or alignment calls for marks to be made when items are mated and aligned. In such cases, the specific hardware used may be the only hardware where such correct, verified alignment could be duplicated. The records, in such cases, specify the serial numbers of the items used.

Serialization also aids in evaluating the history of problems with any item. The history of each is documented and accompanies the item through testing, preflight inspection, etc.

S/C to GFE Interface Configuration Control

GFE when aboard a spacecraft has one or more interfaces with the S/C.[23] A basic interface comes from stowage of an item within the S/C, or attachment of the item to the spacecraft at launch. Other interfaces, depending on the function and requirements of the hardware, may result from S/C support (mating surfaces, electrical power, fluid flows, etc.). There are certain management tools and controls used to assure the GFE is properly matched and accommodated by the S/C. These techniques are

[22] CSM/LM Operational Data Book, Volume IV: EMU Data Book, SNA-8-D-027(IV) (Rev. 2; July 7, 1971), passim.

[23] Interfaces in the context used here applies to those junctions between the GFE and the S/C where matching or accommodation must be achieved to make operations or functions compatible and successful. North American Rockwell Corporation, NASA Contract NAS 9-150, Appendix A to "Memorandum of Understanding, Preparation Manual Interface Control and Documentation," December 24, 1964.

applied, for the most part, prior to and parallel with development of the flight configuration of the GFE and S/C in areas of interface. Implementation at this time is required to preclude fit and function incompatibilities with configured prototype hardware used later in mockup reviews, as well as flight hardware used in preflight checkout and flight. Incompatible interfaces create additional redesign time and manpower efforts, loss of S/C integration support during redesign and manufacture, and additional program costs. Proper emphasis and application of the management control techniques described will be of significant aid in reducing such problems.

GFE Performance and Interface (P&I) Specifications

These specifications establish the Performance and Interface between the GFE and appropriate S/C, or in some cases, the applicable major portions of a spacecraft (i.e., the LM scientific equipment, or the Command and Service Module (CSM) Scientific Instrument Module used in CSM's 112-114). Their objective is to specify those performance and interface requirements necessary to ensure compatibility between the GFE and the S/C. A P&I specification's relative position in the Apollo Specification Tree was shown in Figure 16.

The kind of requirements which are important in these specifications are those relating to natural and induced environments (temperatures, vibrations, g's, etc.), interfaces relating to areas of electrical, fluid, mechanical, electromagnetic and electrostatic compatibility, and general design, quality, and maintenance standards.

The original CM and LM P&I specifications defined general criteria above, and items such as spacesuits and other stowed GFE requirements. For the suit, requirements for electrical interfaces, oxygen flows and temperatures, suit pressure drop, and suit mobility were defined. Since the suit was a basic GFE requirement unchanged throughout the program, such information was essential and remained fairly stationary throughout the program. Initial requirements for other GFE equipment were originally specified as could be best determined by NASA and the contractor at the time. Unfortunately, as time passed the majority of original CM and LM GFE stowage and interface items were modified, deleted, or superseded by a different configuration. When the CCB added an item, its interface requirements were usually discussed with contractor representatives at the CCB. P&I specifications for the internal crew station were therefore quite susceptible to changes in the stowage configuration and stowage list.

Since interfaces for onboard items are defined and controlled by separate Interface Control Documents, the value of such specifications was greatly diminished. As a result, the CM GFE P&I specification was not updated for years, and it was agreed the specification "was not the most optimum media (SIC) for maintaining P&I requirements for GFE crew equipment due to the growth of the number of GFE items."[24] Revisions to the Specification Change Notices would be wasteful at this point because they would only reference other control documents.

---

[24]NASA letter PD5/L392-PP5-70-453, Contract AS 9-150 from R. C. Hood Project Officer CSM Programs to Mr. D. F. Graham, Manager, CSM Business Operations Space Division, North American Rockwell Corporation, October 14, 1970.

Such crew station documents have maximum value during the program's initial design and development, where there is need to define and collate basic interface requirements and cover any new critical interfaces such as a spacesuit. P&I specifications for items such as the CSM Scientific Instrument Module do not fit the same category as those discussed above, since these are installed GFE scientific instrumentation and are not susceptible to stowage list GFE changes.

Interface Control Documents

I. Definition/Description[25]

A GFE Interface Control Document (ICD) is the primary control instrument of the technical interface between hardware end-items provided by the government, or a government supplier as GFE, and the S/C contractor. The ICD identifies and controls those characteristics of each item which, if changed, can physically or functionally impact interfacing or cofunctioning assemblies for the overall system.[26] The purpose of the ICD is to record, by a formal engineering document, mutual design agreements.

Two types of interfaces require ICD's:

1. Interfaces between equipment by two or more NASA MSC contractors (associate contractor ICD's).
2. Interfaces between NASA Centers (or other government agencies) which impact the missions (inter-center ICD).

[25] Apollo Program CSM J-Series Missions Integration Plan, SD 69-430, (Downey, Calif.: North American Rockwell, Space Division, NASA Contract NAS 9-150, CCA 3355, March 1, 1970).

[26] North American Rockwell Corporation Contract NAS 9-150, Appendix A to "Memorandum of Understanding," op. cit.

This discussion is limited primarily to the first type ICD. Of the total Apollo CM and LM GFE ICD's, approximately 60 percent are related to crew station configuration control.[27]

There are two types of ICD's--physical and functional. Physical ICD's cover mechanical, electrical, and fluid configurations or diagrams. The four specific types of ICD's (three physical, one functional) are:[28]

1. Mechanical ICD's:

   A mechanical ICD shows a mating of two or more associate contractor configurations. A detail is taken from each side of the interface to show all pertinent information, assuring a correct mating for dimensions on hole patterns and sizes, attached hardware, material surface finish, torque requirements, etc. Tolerances must be controlled to assure proper fit.

2. Electrical ICD's:

   An electrical ICD is symbolic only, and usually represents functional flow across a connector or an intercabling diagram. Drawings will contain the following information, as applicable: connector-part number, reference designator, specification, and pin numbers; wire-type, size, and specification; cable lengths--they indicate schematically the physical make-up of the cable (i.e., twisted and shielded); interface signal functions; interface signal schematics indicating signal flow; physical locations (as reference only); contractor supplying equipment; keyway location for mounting plane and pin number arrangement; connector halves defined by other ICD's are noted as reference.

---

[27] From Private communication with Jerry E. Siemers, Boeing Corporation representative at NASA Manned Spacecraft Center at Houston, Texas, December 8, 1969.

[28] Op. Cit. North American Rockwell Corporation, Contract NAS 9-150.

3. Fluid ICD's:

A fluid ICD is basically a mechanical schematic or flow diagram. It defines mating parts, system fluid, working flow rates, etc.

4. Functional ICD's

Functional ICD's cover functions (steady state and transient system performance limitations, signal format and synchronization, etc.), environments (aero-thermal, internal and external pressures, vibration, acceleration, temperature, etc.), and procedures and limitations of application (signal-to-noise ratios, etc.).

Examples or combinations of these ICD's are discussed later.

In the Apollo Program, the CM spacecraft contractor, North American Rockwell and the LM S/C contractor, Grumman Aerospace Corporation, were responsible for developing and maintaining ICD's for their S/C's. ICD's are contractual documents for the S/C contractor, referenced by ICD title, basic number and revision letter in the Master End Item Specification for the S/C. Approved revisions to ICD's, Interface Revision Notices, are incorporated in the Master End Item Specification via Specification Change Notices. Other contractors who are cosigners to the ICD also incorporate these ICD's into their official contract specifications.

ICD's should be "signed-off" as contractual documentation before the CDR and final release of related S/C and GFE engineering drawings. There have been a number of implementation problems with this requirement, which will be discussed later.

II. Function/Utilization

Since the stowage list depicts authorized onboard GFE, it identifies hardware which require crew-station type ICD's. As noted, during initial development of the Apollo S/C Program a number of these items had not been developed. In other cases, GFE developed during the Gemini Program were acceptable for use in Apollo with little or no modification. This GFE's configuration and other information required for interface definition was available, in at least preliminary form. The memoranda provided in Appendix D provides samples of ICD information used early in the Lunar Module Modification Program. In this case, most of the stowage items were already identified, being used, and covered by an existing ICD. The addition of sealed bags to contain 16mm and 70mm film magazines effectively changed the stowage configuration of these magazines, requiring either a new ICD or a revision. New weight and particularily shape required documentation. For the Flight Data File Assembly, preliminary estimates indicated a 30 percent volume increase over the baseline Apollo volumes, although the precise configuration was unknown. For food, the LM contractor was requested to make provisions to accommodate an ascent stowage of 480 cubic in., with minimum dimensions in two axes of 4.25" x 7.25", and a weight of 5.60 lbs. All these interface design criteria were negotiated and revised to resolve the applicable interface. For food stowage, there was enough basic information to allow the LM contractor to initiate a design change and present a proposed configuration to NASA and their food supplier.

Throughout the program a number of group meetings are held with NASA, the contractors, and the hardware suppliers to define hardware configuration, identify interface requirements, and negotiate differences among

interface parties. ICD reviews are held during major S/C configuration reviews, and throughout most crew station reviews and meetings. The Crew Station Reviews frequently verify use of representative GFE items as they are designed to interface with the S/C. CCSR's, CEIT's, CCFF's, CFF's, and other flight vehicle integration tests also serve as verifications for stowed interfaces, mating mechanical and electrical hardware fit and function, and physical clearances or interferences found in mission type use. All these reviews serve as checks on the acceptability of the ICD's and have proved invaluable for uncovering interface discrepancies and problems before flight.

Following are examples of various types of ICD's prepared by North American Rockwell and Grumman Aerospace Corporation for the CM and LM.

1. Figure 18 is a simple CM ICD for a penlight envelope. Initially, the penlights were stowed in the CM in molded rubber-type cushions. This ICD defines the configuration and maximum weight of the item. Early in CM stowage redesign effort, the CM contractor crew station personnel and myself determined the CM ICD's would define information and pertinent constraints, as necessary for the S/C contractor to stow hardware items, but not the stowage location or specific design (except where required to control the interface). The contractor was responsible for adequately stowing the hardware. Also, the stowage location would be controlled by the stowage list. Use of the stowage location on the ICD is costly and time consuming, since the interface has to be drawn on the ICD and the ICD continually revised to

Figure 18 PENLIGHT ICD

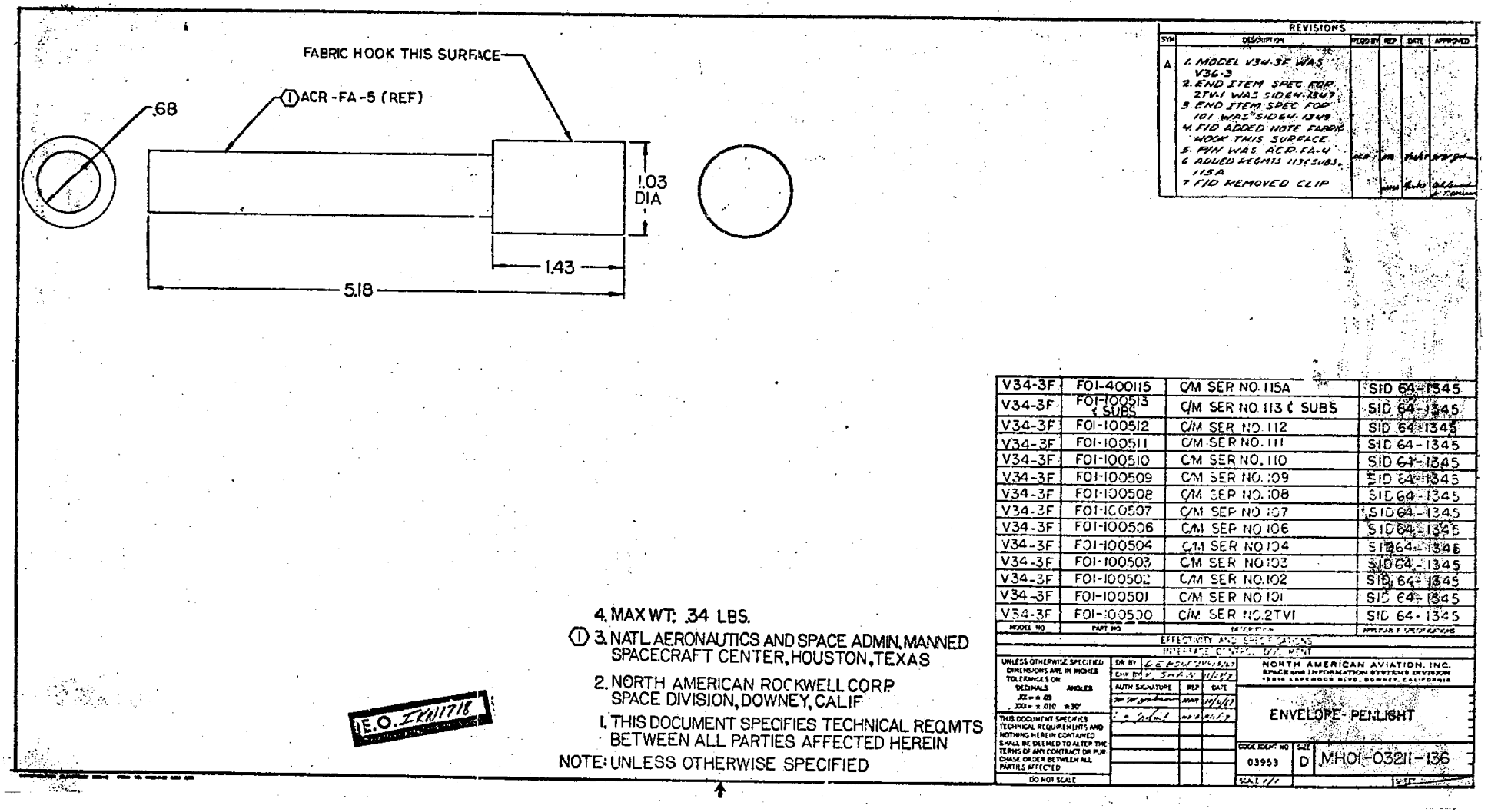

Source: Interface Control Document Number MH01-03211-136, Envelope-Penlight, (North American Rockwell Corporation, NASA Contract NAS 9-150) Revision A, August 28, 1968.

reflect S/C changes affecting the ICD. The parties signing the ICD, other than the contractor, would, in effect, control the stowage location and design, and hamper the contractor's design autonomy. Also, the cosigning authority for NASA personnel consisted primarily of various suppliers usually not involved in S/C stowage or interested in it any way, as long as their item was adequately protected. NASA crew station personnel were responsible for assuring stowage design compatibility and total integration of all GFE and CFE stowage.

2. Figure 19 is a LM ICD for still-camera film stowage. This ICD is basically different from the CM ICD already described. It depicts the LM Stowage interface as well as critical GFE hardware dimensions. It has the advantage of incorporating in one drawing several hardware item interfaces. In this case, the container included hardware which a NASA individual could sign, saving preparation of several ICD's and shortening sign-off coordination time. This ICD, like the previous example, involved interface of "loose" items which can be quickly stowed or unstowed, and which require no closely matched or critical mating.

If, in fact, this ICD was effectively used by the LM contractor as a design constraint where these dimensions are specified, then the ICD kept changes from disturbing the interface and stowage volumes. One disadvantage is the coupling of stowage and ICD's. Frequent stowage changes or

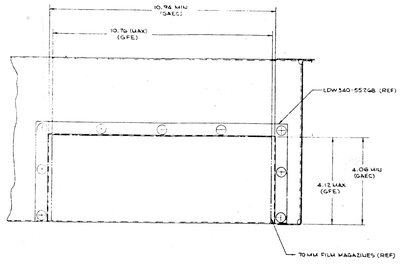

SECTION D-D

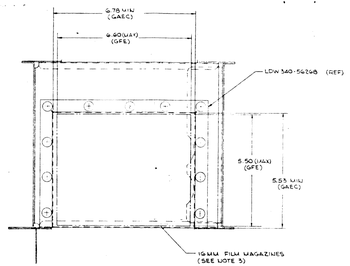

SECTION E-E

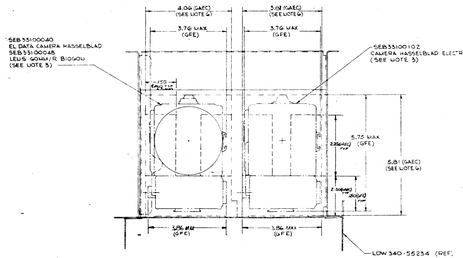

SECTION F-F

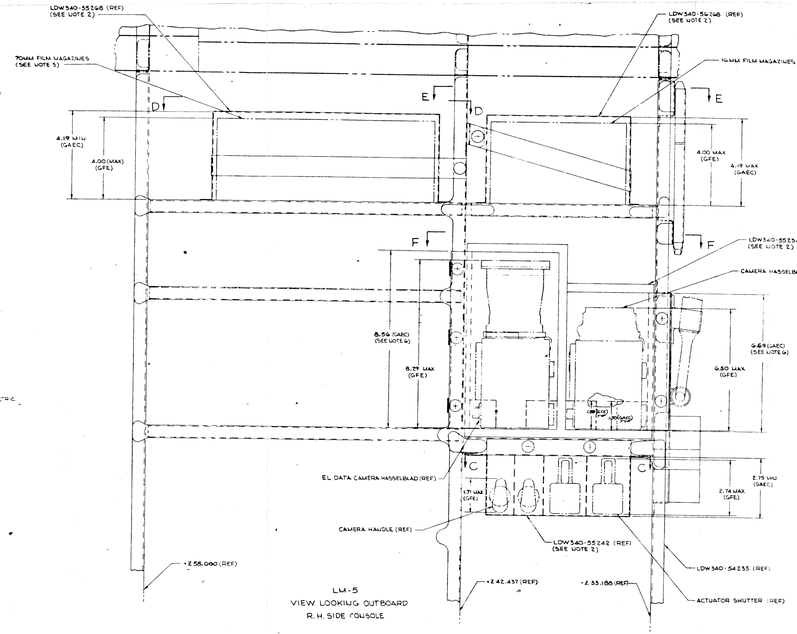

LM-5
VIEW LOOKING OUTBOARD
R.H. SIDE CONSOLE

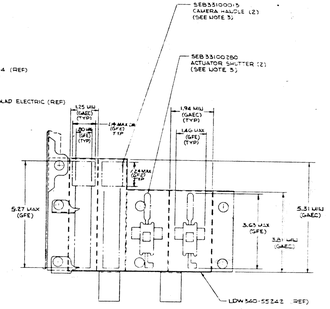

SECTION C-C

Figure 19. LM Stowage ICD

INTERFACE CONTROL DOCUMENT		
STILL CAMERA CONTAINER		
J 26512	LID340-25146	B

shifting of stowage locations of the same equipment, are more likely to impact the ICD, causing costly, time consuming changes; such changes, however, were much less frequent in the LM, which had comparatively limited stowage volume and was extremely weight-sensitive.

This ICD represents a different approach to ICD's for loose items than that discussed previously because it came from a different contractor and was originally monitored by different NASA personnel.

3. Figure 20 depicts the CM pressure garment assembly (suit) to foldable crouch envelope, mating interfaces, and adjustments required of the suit-to-couch interface. Couch dimensions critical to suited accommodation are included, as shown, in Sections J-J and C-C. Couch adjustment features required for various suit and limb sizes are noted in Detail D and Section C-C. A critical interface between the couch and suit is the suit heel restraint (See Section F-F), which keeps the crewman's feet in the couch foot pan, offsetting involuntary movements which might occur during abort or normal reentry and landing. It is essential the fit allow easy removal by the crewman when attempting to remove his feet from the couch restraint during emergency pad egress and landing. This interface is sensitive from a fit standpoint, and effectively controls the suit heel design and its qualifications, as well as the couch heel restraint design and qualification. Figure 20 also depicts general motions and operations required for couch operations.

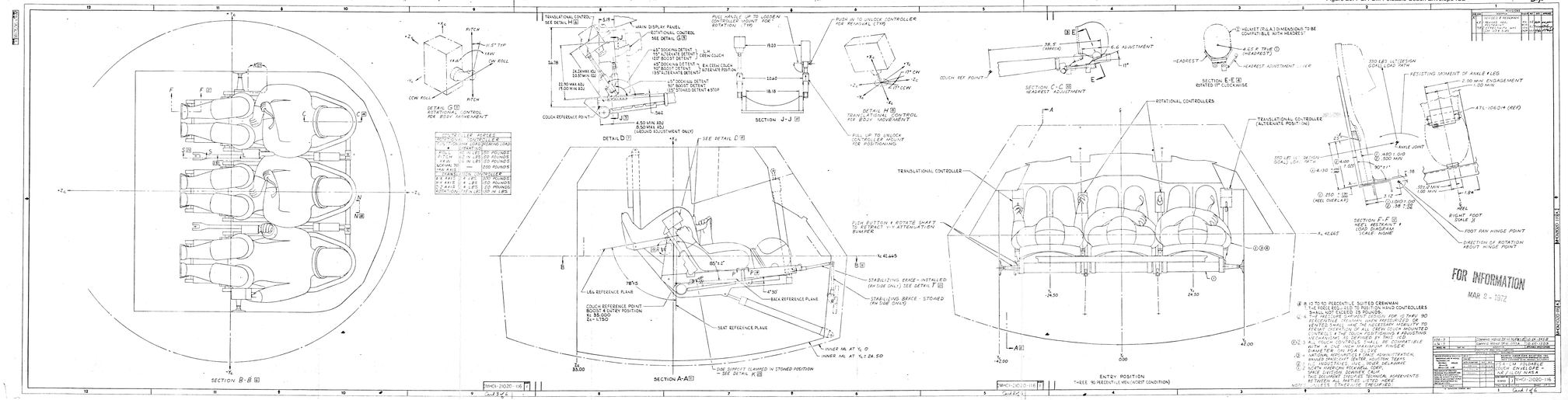
SECTION B-B
DETAIL G
ROTATIONAL CONTROL FOR BODY MOVEMENT
PITCH
YAW
CW ROLL
CCW ROLL
DETAIL D
TRANSLATIONAL CONTROL SEE DETAIL H
MAIN DISPLAY PANEL
ROTATIONAL CONTROL SEE DETAIL G
COUCH REFERENCE POINT
SECTION J-J
PULL HANDLE UP TO LOOSEN CONTROLLER MOUNT FOR ROTATION (TYP)
PUSH IN TO UNLOCK CONTROLLER FOR REMOVAL (TYP)
DETAIL H
TRANSLATIONAL CONTROL FOR BODY MOVEMENT
PULL UP TO UNLOCK CONTROLLER MOUNT FOR POSITIONING
SEE DETAIL D
SECTION A-A
STABILIZING BRACE - INSTALLED (RH SIDE ONLY) SEE DETAIL T
STABILIZING BRACE - STOWED (RH SIDE ONLY)
LEG REFERENCE PLANE
COUCH REFERENCE POINT BOOST & ENTRY POSITION
BACK REFERENCE PLANE
SEAT REFERENCE PLANE
ONE SUPPORT CLEARED IN STOWED POSITION SEE DETAIL K
PUSH BUTTON & ROTATE SHAFT TO RETRACT 1-4 ATTENUATION BUMPER
ROTATIONAL CONTROLLERS
TRANSLATIONAL CONTROLLER
TRANSLATIONAL CONTROLLER (ALTERNATE POSITION)
COUCH REF POINT
SECTION C-C
HEADREST ADJUSTMENT
SECTION E-E
ROTATED 17° CLOCKWISE
HEADREST
HEADREST ADJUSTMENT
SECTION F-F
HEEL RESTRAINT & LOAD DIAGRAM
ANKLE JOINT
HEEL
RIGHT FOOT SCALE ½
FOOT PAN HINGE POINT
DIRECTION OF ROTATION ABOUT HINGE POINT
ENTRY POSITION
(THREE 90 PERCENTILE MEN (WORST CONDITION)
FOR INFORMATION
MAR 0 - 1972
MHCI-21020-116
MHCI-21020-116

Figure 20. Continued

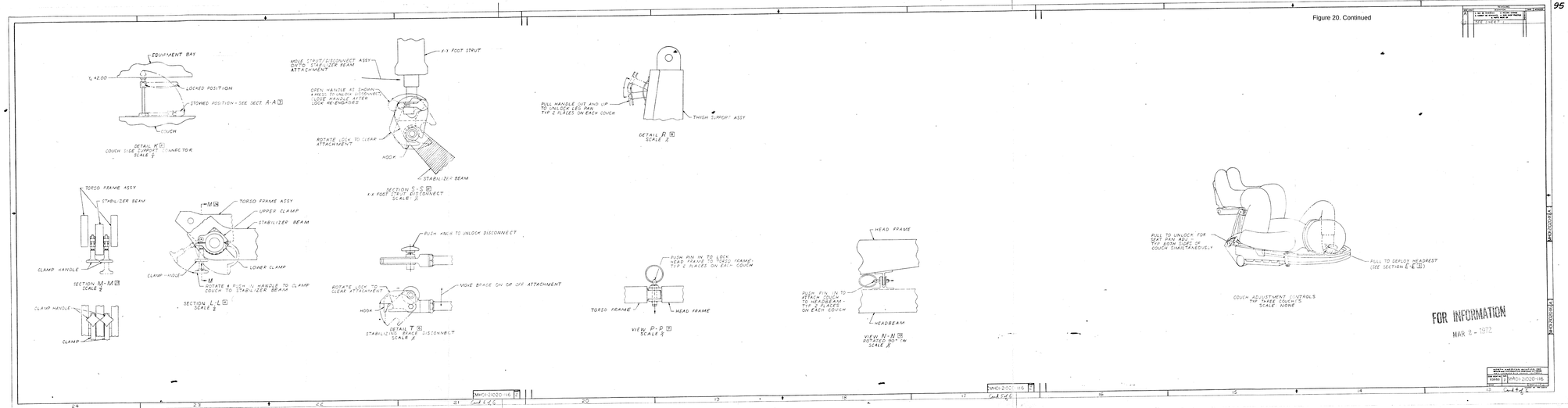

4. Figure 21 depicts the interface requirements for mounting the 70mm Hassleblad camera with 500mm lens in the right-hand CM rendezvous window. Since the camera, magazine, and lens are stowed separately, three other ICD's define their configuration, as noted in the figure. This figure indicates "shimming" and modification of the GFE camera adapter; it also specifies clearance requirements from the inner windowpane and camera alignment requirements.
5. An electrical ICD is depicted in Figure 22. This ICD defines the detailed electrical connector pin assignments between the EVA umbilical and the spacesuit (EMU) which are connected during the CM EVA portions of Apollo 16 and subsequent missions. Included are provisions for use of bioinstrumentation, low pressure sensing, warning tones and communications.
6. A sample preliminary ICD on the functional requirements for the trans-earth EVA life support system on Apollo 15 and subs is provided in Appendix G. This ICD contains performance and specific design requirements as needed to ensure adequate and safe performance for the EVA system.
7. Appendix H depicts the interface control document which serves as the materials/flammability control of Velcro additions to the CM. A similar document exists for the LM. Velcro is controlled because of its importance to the flight crew in the temporary, in-flight stowage of equipment, and because of its flammability and combustibility. This "map" controls all Velcro installed within the S/C structure and equipment, on items stowed in

Figure 21. 70MM CAMERA AND LENS INSTALLATION IN SPACECRAFT

DATA BLOCK		
DESCRIPTION	ICD DWG NO.	NASA DWG NO.
70 MM CAMERA W/80 MM LENS	MH01-03247-136	SEB33100102-206
70 MM MAGAZINE	MH01-03248-136	SEB33100082-211
500 MM LENS	MH01-03340-136	SEB33100284-301

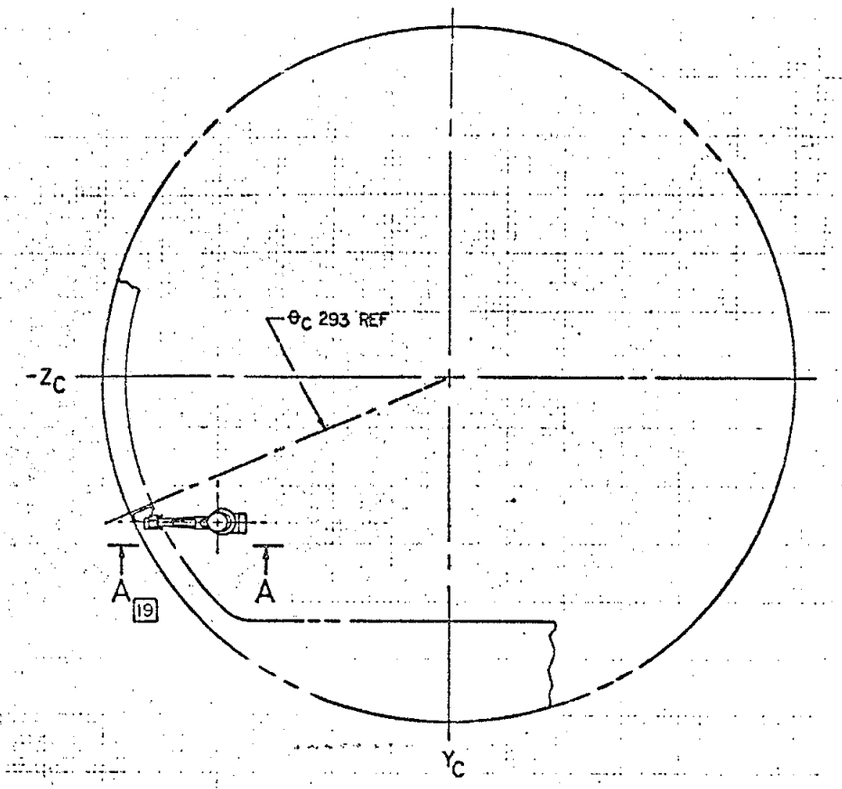

VIEW LOOKING AFT

6. CAMERA FIELD OF VIEW TO BE FREE OF STRUCTURAL BLOCKAGE

5. NO SPECIAL ENVIRONMENTAL CONTROL TO BE PROVIDED BY NAR

4. FOR ENVELOPES, WEIGHT AND ADDITIONAL INFO SEE ICDS OR NASA DWGS LISTED IN DATA BLOCK

(2) 3. NATIONAL AERONAUTICS AND SPACE ADMINISTRATION, MANNED SPACECRAFT CENTER, HOUSTON, TEXAS

(1) 2. NORTH AMERICAN ROCKWELL CORP, SPACE DIVISION, DOWNEY, CALIF

1. THIS DOCUMENT SPECIFIES TECHNICAL REQUIREMENTS BETWEEN ALL PARTIES AFFECTED HEREIN

NOTES: UNLESS OTHERWISE SPECIFIED

V34-3	F01-750021	C/M SERIAL NO. 108-115A	SID 64-1345
MODEL NO	PART NO	DESCRIPTION	APPLICABLE SPECIFICATIONS

EFFECTIVITY AND SPECIFICATIONS
INTERFACE CONTROL DOCUMENT

UNLESS OTHERWISE SPECIFIED DIMENSIONS ARE IN INCHES. TOLERANCES ON DECIMALS .XX = ± .03 .XXX = ± .010 ANGLES ± 30'

THIS DOCUMENT SPECIFIES TECHNICAL REQUIREMENTS AND NOTHING HEREIN CONTAINED SHALL BE DEEMED TO ALTER THE TERMS OF ANY CONTRACT OR PURCHASE ORDER BETWEEN ALL PARTIES AFFECTED

DO NOT SCALE PRINT

DR BY W. SPENCER 9-19-64
CHK BY
AUTH SIGNATURE REP DATE

SPACE DIVISION
NORTH AMERICAN ROCKWELL CORPORATION

70 MM HASSELBLAD CAMERA AND 500 MM LENS INSTL. - RH RENDEZVOUS WINDOW

SIZE J CODE IDENT NO 03953 MH01-03306-136

SCALE NOTED SHEET

E D C B A

MH01-03306-136

Figure 21, continued - 2

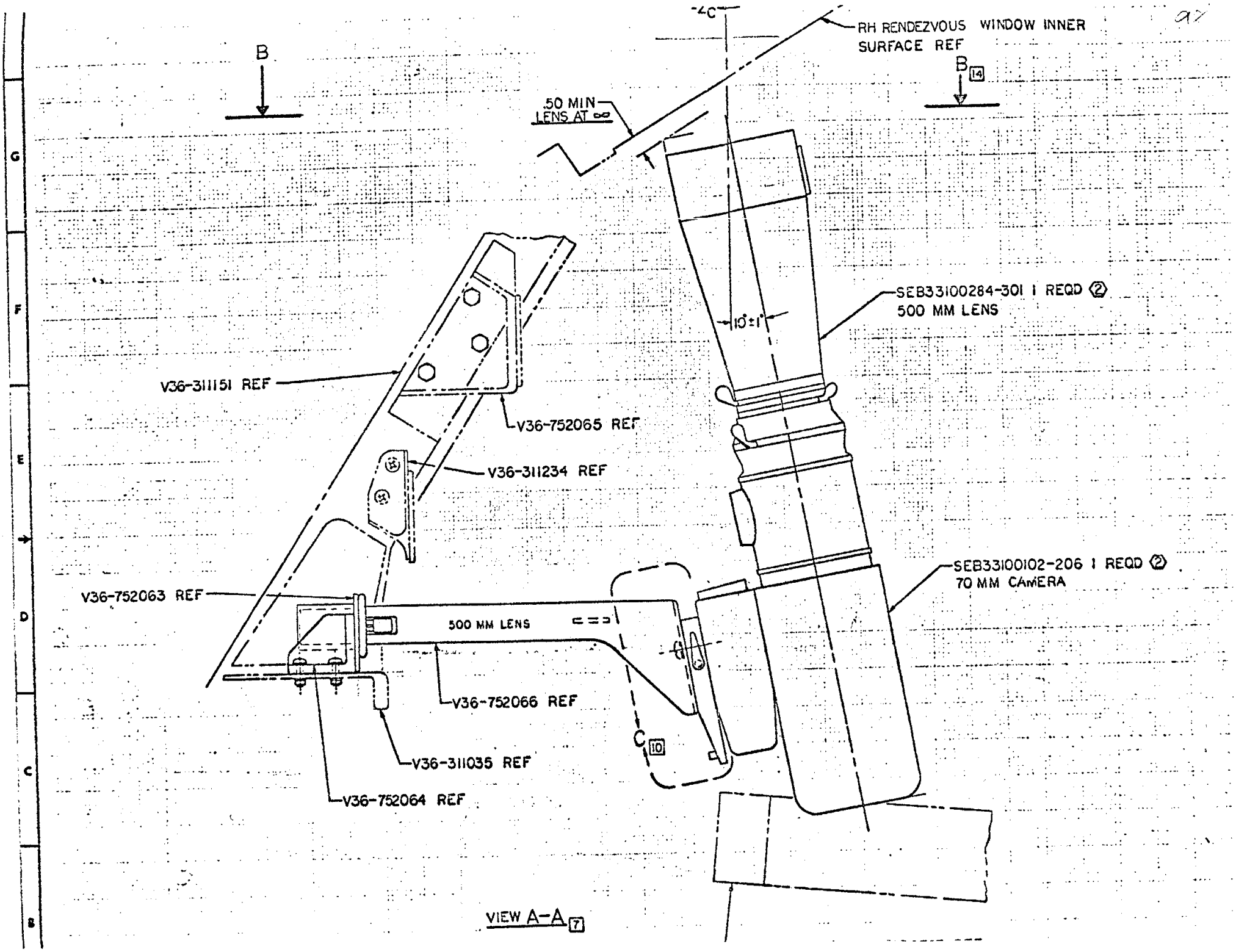

Figure 21, continued - 3

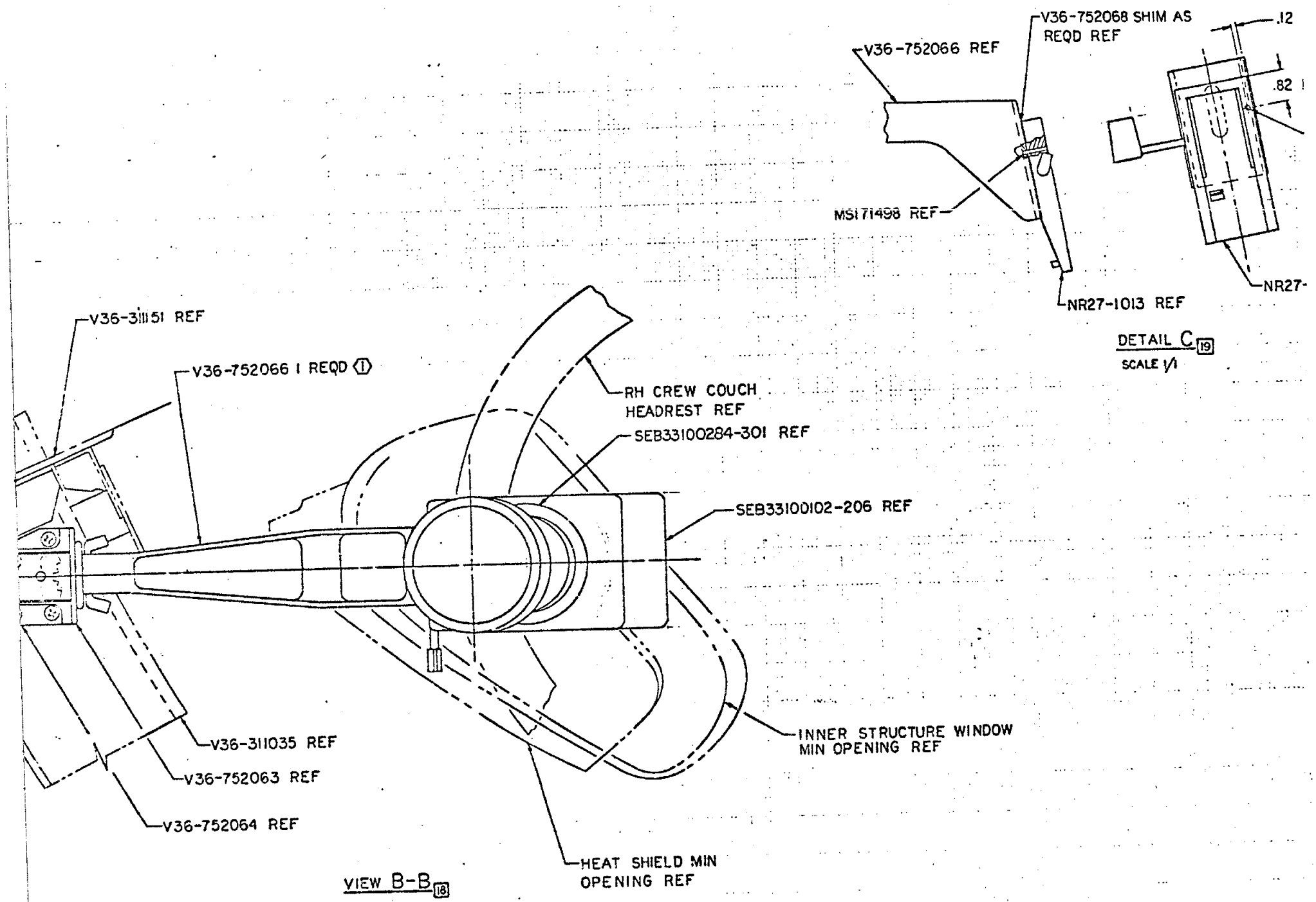

REVISIONS						
ZONE	LTR	DESCRIPTION	REQD BY	REP	DATE	APPROVED
	A	1. REMOVED SWITCH 2. 2 TRIADS (WAS) 1, 5 CONDUCTOR ADDED WIRE ON PIN 29	MCRA 13037	NR ILC NASA		
	B	ADDED ILC & NASA SIGNATURES		NR ILC NASA		
	C	INSERTED CONTROL HEAD IN LIEU OF CCU FOR PRIMARY USAGE & ADDED (LOW) FLOW SW. DELETED C/M 115A - REVISED TUBE TO ADD J MISSION	MCR 13204 MCR 12556	NR ILC NASA		

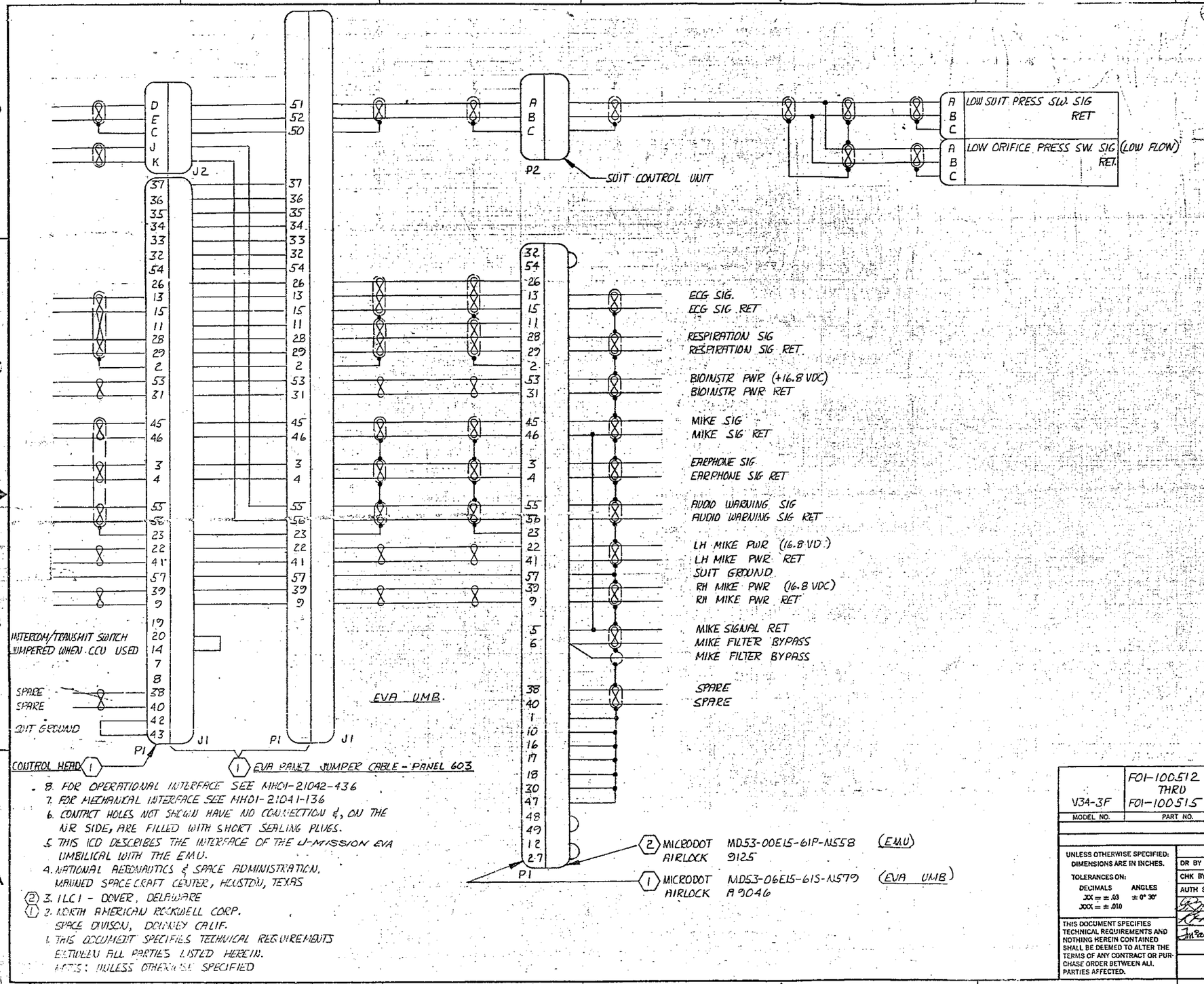

8. FOR OPERATIONAL INTERFACE SEE MH01-21042-436
7. FOR MECHANICAL INTERFACE SEE MH01-21041-136
6. CONTACT HOLES NOT SHOWN HAVE NO CONNECTION & ON THE NR SIDE, ARE FILLED WITH SHORT SEALING PLUGS.
5. THIS ICD DESCRIBES THE INTERFACE OF THE J-MISSION EVA UMBILICAL WITH THE EMU.
4. NATIONAL AERONAUTICS & SPACE ADMINISTRATION, MANNED SPACECRAFT CENTER, HOUSTON, TEXAS
(2) 3. ILC - DOVER, DELAWARE
(1) 2. NORTH AMERICAN ROCKWELL CORP. SPACE DIVISION, DOWNEY CALIF.
1. THIS DOCUMENT SPECIFIES TECHNICAL REQUIREMENTS BETWEEN ALL PARTIES LISTED HEREIN.
NOTES: UNLESS OTHERWISE SPECIFIED

FILE COPY

MODEL NO.	PART NO.	DESCRIPTION	EFFECTIVITY	APPLICABLE SPECIFICATIONS
V34-3F	F01-100512 THRU F01-100515	C/M SER. NO. 112 THRU 115		SID 64-1345

EFFECTIVITY AND SPECIFICATIONS
INTERFACE CONTROL DRAWINGS

UNLESS OTHERWISE SPECIFIED: DIMENSIONS ARE IN INCHES.
TOLERANCES ON:
DECIMALS .XX = ± .03 .XXX = ± .010
ANGLES ± 0° 30'

THIS DOCUMENT SPECIFIES TECHNICAL REQUIREMENTS AND NOTHING HEREIN CONTAINED SHALL BE DEEMED TO ALTER THE TERMS OF ANY CONTRACT OR PURCHASE ORDER BETWEEN ALL PARTIES AFFECTED.

DR BY	E. V. McNEIL		10-13-69
CHK BY	CHECKED		11-21-69
AUTH SIGNATURE		REP	DATE
		NR	11-20-69
		ILC	11/18/69
		NASA	11/19/69

SPACE DIVISION
NORTH AMERICAN ROCKWELL CORPORATION
12214 LAKEWOOD BOULEVARD • DOWNEY, CALIFORNIA 90241

ELECTRICAL INTERFACE - J MISSION EVA UMBILICAL/EMU

SIZE	CODE IDENT NO.	
D	03953	MH01-21043-236

SCALE NONE SHEET

MH01-21043-236 C

compartments, and on all GFE, including crew apparel, e.g., suits. The potential ignition points are identified. Specific requirements for this "map," as defined in NASA direction, were as follows:

The contractor shall provide for the systematic control of velcro material installed in the CSM by implementing the use of a special drawing, to be called the "velcro map."

1. A velcro map drawing shall be made for each vehicle, and drawing numbers assigned will reflect the applicable vehicle and the current drawing revision. Contents of the drawing shall be as follows:

   Appropriate views of the crew compartment which pictorially and dimensionally illustrate to scale all velcro installed in the crew compartment. Materials adjacent to the velcro shall be indicated, and any potential ignition sources such as nearby wiring will be shown. A bill of materials on the velcro map shall indicate for each piece of velcro the station number, dimensions, type and weight of bonding agent, process specifications used, and total weight of the installation.

2. A second bill of materials shall be included on the velcro map and shall call out each stowed item in the crew compartment which contains velcro, the dimensions and type of velcro attached to the item, the stowage location of the item, and identification of all other items containing velcro which are stowed in the same location.

3. The velcro map does not eliminate the requirement for the submittal of COMAT worksheets on velcro as part of the non-metallic materials installation in the vehicle.

4. The drawing shall indicate the point in manufacturing and/or test flow and the manner of velcro installation applicable to the drawing revision.

5. The materials and processes used for velcro installation shall also be subject to the same control as the velcro map.

6. A baseline will be defined by the initial velcro map, which will be submitted to MSC for approval. Maintenance of the drawing in a current and updated status will be the responsibility of the spacecraft contractor. Subsequent changes

> to the baseline will be made normally by updating the velcro map after regularly scheduled Crew Compartment Stowage Review (CCSR), Customer Acceptance Readiness Review (CARR), Crew Compartment Fit and Function (CCFF), altitude chamber tests, and prior to flight. All changes will be submitted to MSC for approval. Proposals for additions of velcro to the vehicle by the Contractor at times other than those already stated shall be requested by Engineering Change Proposal (ECP) to MSC.[29]

In the Apollo program a number of important functional control-display Interface Control Documents existed between the CM, LM, and guidance and navigation contractors. These ICD's were as follows: MH01-05175, Panel Controls (CM/LM Control and Display Standardization); MH01-01388, Interior Lighting, Functional Performance Criteria; MH01-05174, Nomenclature, Markings and Color (CM/LM Control and Display Standardization); MH01-05176, Display Faces (CM/LM Control and Display Standardization; and MH01-05178, Annunicators and Electromechanical Status Indicators (CM/LM Control and Display Standardization). The purpose of these ICD's was to standardize controls and displays in the CM and LM Crew Stations. The information contained in these documents is shown by the following description:

MH01-05175-414 Panel Controls (CM/LM Control and Display Standardization)

> Standardizes the operation, mounting, and guarding, and orientation of toggle, rotary, and pushbutton switches, continuous controls, and circuit breakers. Standardizes knobs in the areas of design, color, and shape coding. Establishes design requirements for standard knobs.[30]

A copy of portions of this ICD is attached in Appendix I.

---

[29] NASA Contract NAS 9-150, Contract Change Authorization No. 1752 (Houston, Texas: NASA, MSC, October 19, 1967).

[30] SID 62-1244C, "Lunar Module Performance and Interface Specification," Block II, July 15, 1968. Prepared by North American Rockwell Corporation, Space Division, NASA Contract NAS 9-150.

Several applications of ICD control merit discussion because of their uniqueness:

1. NASA generated ICD:

   In some cases GFE hardware items are of a known configuration--simple in shape, will not change configuration because of compression or differences in folding or packaging, etc. When such items are stowed onboard, and particularly when they are not removed during flight, use of a NASA-initiated ICD is advantageous. This ICD should define the dimensions of the hardware, any critical handling procedures, etc., and maximum weight. Use of this technique saves the cost, coordination time, and manpower of the S/C contractor initiating and coordinating the ICD. In such cases, the contractor generally redraws the information provided by NASA or NASA's supplier and sends it to both of them for concurrence. Good examples of items where this approach is applicable are a High Z passive dosimeter added to S/C 110, 112, 113, and 114 and an Apollo Applications Program film cannister stowed in a locker on previous S/C. Both these items are simple in envelope, stable in configuration, and passively stowed during flight.

2. Crewman reserved envelope requirement:

   In CM S/C 112 and subs, where an EVA excursion is to be made into a Scientific Instrument Module (SIM) bay in the Service Module, there was concern that the scientific equipment and its support hardware (tubing, bracketry, etc.)

would not leave adequate room for the EVA crewman's operations. This concern was particularly so during the design/developemtn of the SIM bay when equipment and hardware items were located and relocated within the bay. NASA determined there was sufficient need, in this case, to quantify the envelope required for EVA operations in the SIM bay to preclude intrusions into this envelope. Accordingly, the CM S/C contractor was directed to incorporate such an envelope into the ICD on the EVA provisions, and to control all equipment/hardware placement from infringement into this area. Simulation tests were set up with the S/C contractor to define this envelope. Figure 23 documents the results and is a portion of the EVA ICD. It shows the area where the envelope applies to the working crewman. Implementation of this envelope via ICD brought requests from the S/C contractor for evaluations of proposed intrusions into the envelope. NASA, therefore, was allowed to assess each proposed change and had the option to grant a detailed waiver to the envelope, if the proposal was acceptable. This approach may be considerably valuable in other areas of S/C design, particularly where positive assurances are required of a given crew functional volume, and where such envelopes can be reasonably determined and controlled.

3. S/C volume type ICD's:

Where there are items of GFE required for each mission, which vary in size, weight, and number within given, identified

Figure 23 EVA ICD, CREWMAN RESERVED ENVELOPE

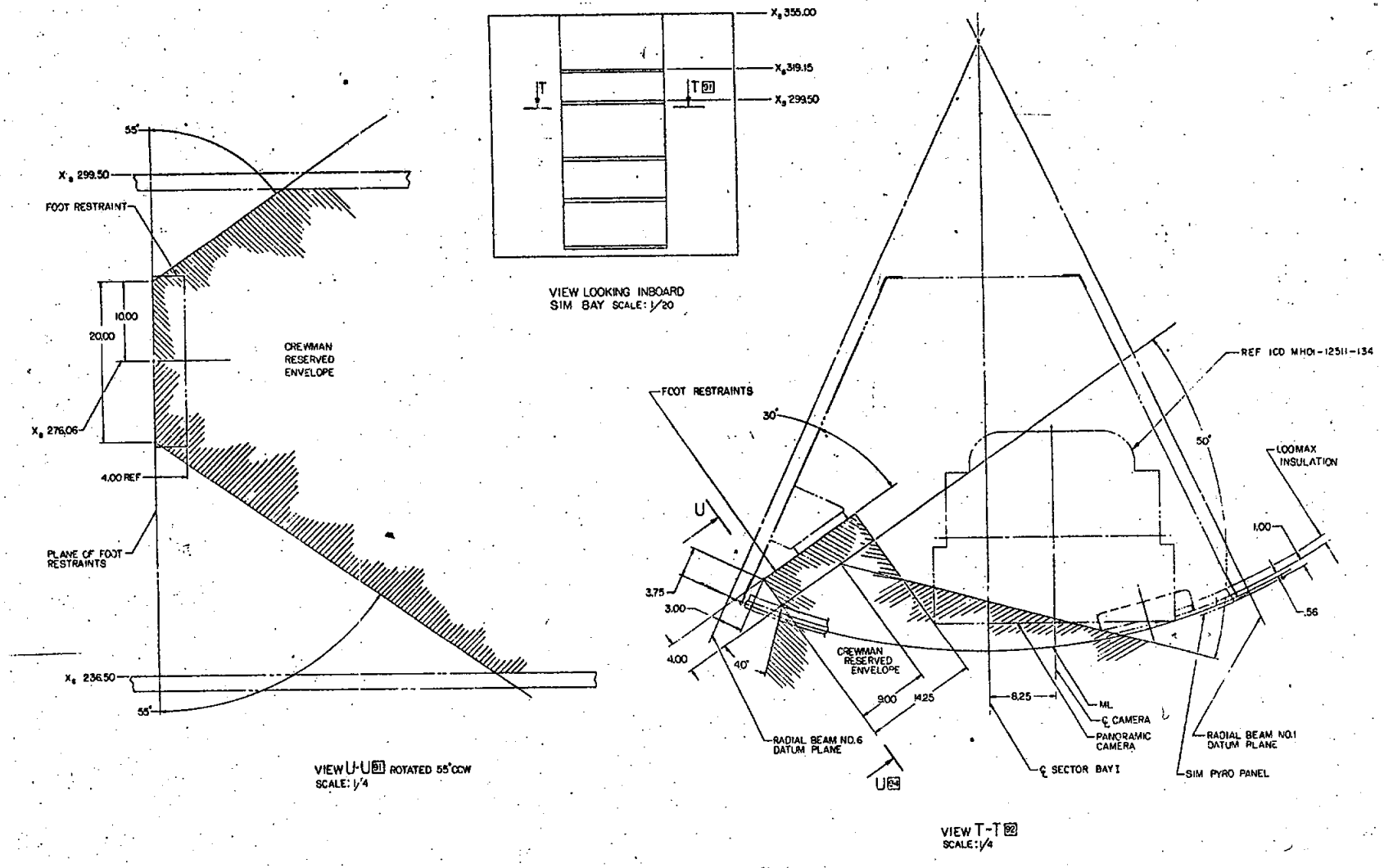

Source: EVA PROVISIONS - CM, SM, and SIM Bay, Interface Control Document Number MH01-21045-134 (North American Rockwell Corporation, NASA Contract NAS 9-150) Revision A, November 24, 1970.

Figure 23, continued

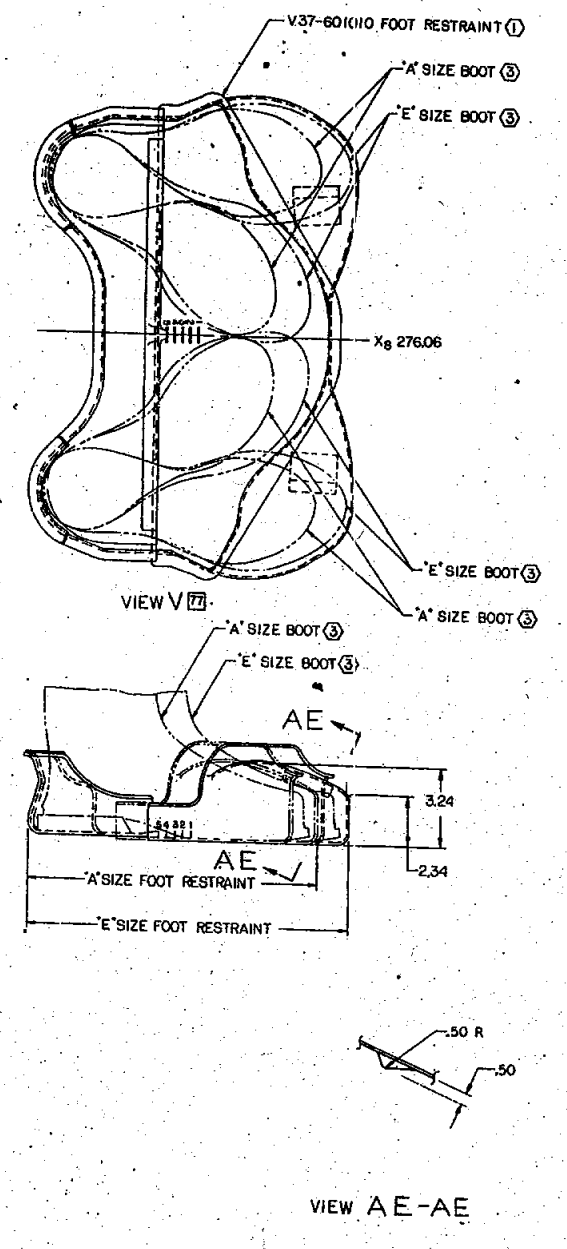

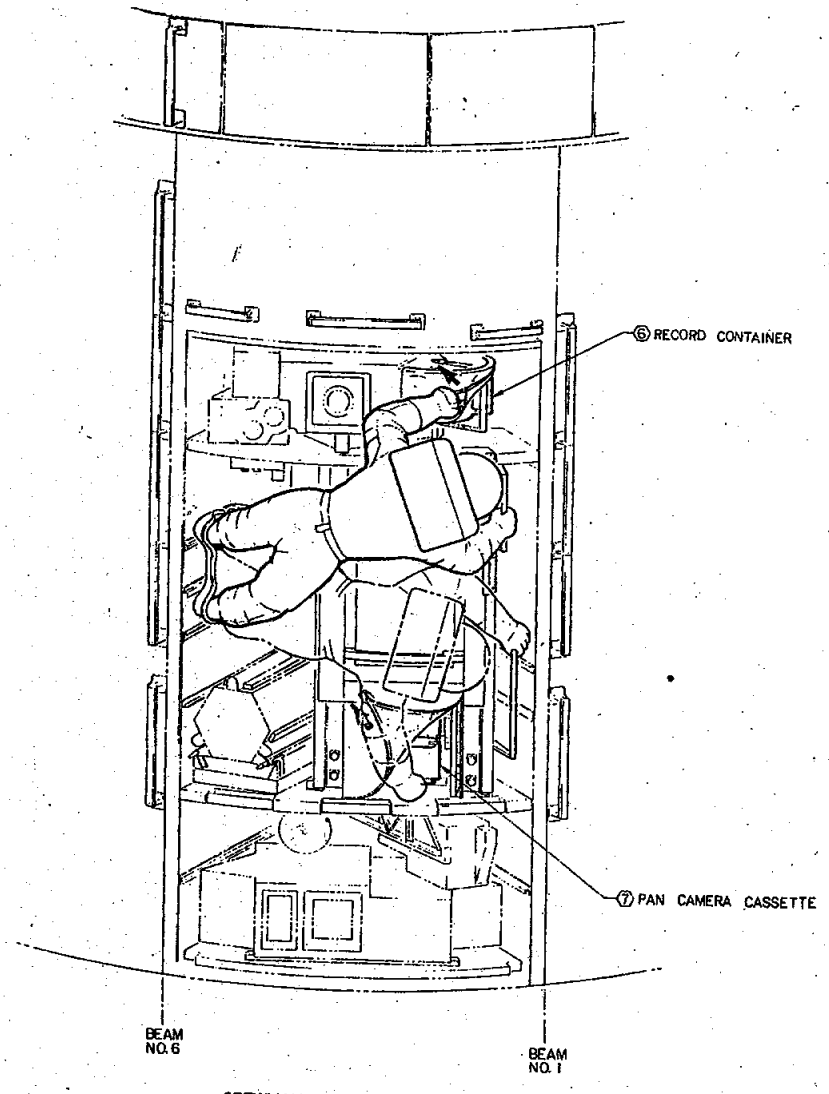

CREWMAN REACH CAPABILITY

constraints, use of a S/C volume ICD may be valuable. A good example is the stowage of the flight data files in both Apollo vehicles. These items were quite susceptible to individual mission requirements, the type of onboard hardware with detailed operational procedures, improvements in basic data, and crew preference. Initially, NASA attempted to define via ICD the specific items to be onboard and their configuration.

It was extremely difficult to have the formal control document reflect all changes which occurred in the flight item. It became obvious that the ICD did not control anything--it merely reflected changes to the hardware. Although the individual book sizes changed, it was determined that the total file could be sufficiently controlled in weight and configuration. As a result, the ICD was changed to depict the total volume available for stowage of the flight data file and included a maximum weight allowable in each compartment. Also, the stowage list was revised to reflect a top assembly part number for the flight data file and individual books for reference only on the stowage drawing. Special authorization for stowage of the file for flight was given. Since the compartments in which the files were stowed had to be appropriately marked for identification, the marking procedures were modified to provide NASA furnished decals for installation on the compartment. The result was savings in cost and contractor/NASA time for defining the details and negotiations.

It is important in such cases that the stowage configuration for such items be stable and adequately defined--in some cases rivet heads or protuberances within compartments have made the GFE installation unacceptable (kits have been torn or stuck in the compartment). Use of a contractor manufactured and provided stowage compartment representing the flight compartment is useful to the supplier of the GFE for ensuring the hardware will fit into the stowage volume allotted. Similar use of this type ICD was applied to the GFE survival kit and food.

ICD's are an important tool, which if used properly can significantly minimize hardware changes and related delivery impact and cost. Recalling the previous description of the ICD--it "identifies and controls those characteristics of each item which, if changed, can physically or functionally impact interfacing or cofunctioning assemblies within the total system." Some major consistent problems during use of ICD's in the Apollo Program are as follows:

1. Unresolved ICD's and late issuance:

A number of ICD's remained unresolved for too long; with schedules pressing both sides of the interface to release hardware drawings, incompatibilities are more likely to occur. ICD's should be resolved before the S/C or hardware item's CDR, and release of engineering drawings to ensure proper evaluation and control of configuration changes.[31] In a specific case

[31] NASA letter PD8/L799-68-PP5-591, from R. C. Hood, Project Officer, C&SM Apollo Spacecraft Program Office, NASA, Manned Spacecraft Center, to Mr. Milton I. Drucker, Director Apollo CSM Program Contracts, Space Division, North American Rockwell Corporation, Downey, California. Written by J. R. Goodman (J. E. Siemers, Boeing, December 9, 1968).

with one contractor, engineering drawings for a change described in a CCA were released before an ICD approval by NASA. The ICD review revealed a design deficiency in the area of the interface which required the processing of a separate contractual direction. Such deviations from established procedure increase the difficulty of control and approval of configuration design changes, and negate the purpose and need for the ICD. In this case, the contractor was by technical direction required to negotiate and document all interface design criteria associated with each design change issued which had an effect on interface, prior to drawing release. Following technical approval of the Interface Control Documentation, Critical Design Review or final release of the engineering design, drawings could be accomplished, provided the Engineering Change Proposal (ECP) has also received NASA approval.

In another example, a NASA contractor was asked to make equipment alignment marks compatible with the mating portion of the LM. It was later found that 25 hardware items were marked in a certain way. In checking, it was found the ICD covering this area was unsigned and both sides of the interface were considering different locations. Since the 25 GFE articles were already marked, the NASA contract monitor for the hardware requested that the S/C be marked according to GFE location. An investigation in an actual S/C revealed this location was not technically acceptable. As a result,

the ICD was prompted to be signed-off showing the proper location, and the GFE supplier had to modify the 25 incorrectly marked hardware items.

During the LM 3 CCSR there were incompatibilities among the LM donning station, the Portable Life Support System (PLSS), and the pressure garment assembly (PGA or suit). As a result, NASA accepted the task to change the PLSS and PGA designs to conform to the interface in the vehicle for the PLSS donning station.[32] The problem stemmed from lack of signed revisions to the ICD.

2. Inaccurate, incomplete, or inadequate ICD detail:

In a number of cases, flight configuration GFE items were substantially different in form or function from what the ICD specified. For example, at one point in the program the size and configuration of the towel container was not in agreement with the existing ICD.[33] As a result of the 101 CCSR, the tissue dispensers were found to be larger than defined by the ICD--in this case the number of tissue containers to be stowed in a locker, per S/C drawings, could not be accommodated, and a tissue dispenser was dropped because there was no room for it.

---

[32] NASA TWX PD8/T740-4-BG-67-T1192, to GAEC, Attn: E. W. Laws, Business Manager, from William M. Chastain, Contracting Office, NASA, MSC, written by James W. Prim, November 7, 1969.

[33] Ref. RFC 101-CSD-15, S/C 101 GFE Design Review, September 12, 1967.

In the LM Modularized Equipment Stowage Assembly (MESA) in the descent tool stowage, interferences were found between tools and the tool-to-S/C interface due to incomplete or inadequate dimensions and control over the interface. Certain areas of the tools which were not documented were found to be critical in S/C fit check. In other cases, volumes or dimensions provided by GFE suppliers were not realistic and discrepancies were discovered when representative hardware was used. Original suit ICD's, for example, did not account for flexibility of the stowed item. In one exercise, it was revealed that the suit stowage would require a minimum of 32" in one dimension to preclude permanent set of the suit's pressure sealing zipper; the ICD had specified 24".[34] This 32" was an important constraint on stowing the suit and should have been documented on the original ICD.

In another case, a special type flight lunar surface camera (GFE) arrived at KSC for incorporation into the LM-5 S/C (the LM used for the first lunar landing mission).[35] The camera arrived in late May or early June for support of a July 16 launch. A rubber "snubber" (spacer pad) was

---

[34] NASA Memorandum PM5/M1094, subject: Block II Suit Hardware Volumes from PM/Chief Mission Operations Division to EC Chief, Crew Systems Division, written by Jerry R. Goodman/PM5, May 18, 1966.

[35] NASA-NSC Memorandum PD8/M1977, subject: Closeup Stereo Camera Installation, from PA/Manager for the Lunar Module, Apollo Spacecraft Program, to TA/Director of Science and Applications, written by Jerry R. Goodman, June 25, 1969.

found in the shipping package with the camera. Incomplete design and installation information on the snubber was also in the GFE supplier data package. Prior to arrival of this item, its existence was unknown to the S/C contractor and MSC personnel responsible for crew station integration of ICD's. After attempts to clarify installation requirements, definitions, and rushed discussions, MSC directed (on June 10) the LM contractor to install the item in accordance with the then incomplete installation instructions and procedures. The direction included authorization for further clarification of installation procedures, etc., by a NASA representative at KSC. Successful installation was made in time to support prelaunch closeout of the LM descent stage. The ICD was revised for LM 6 and subs, to reflect use of snubber and applicable interface requirements. In this case, not only was the ICD too late to support interface definitions and this flight, but its basic interface definition was almost too late to support final stowage and installation. It was a prime example of failure to properly identify and define a critical component necessary to interface accommodation.

In a number of other situations, important interface criteria were inadvertently overlooked, and mockup or S/C reviews fortunately revealed these inadequacies.

3. Changes to hardware which impact ICD's:

Another problem was that GFE hardware changes were at times made without regard for the S/C interface and timely ICD signoff. For instance, GFE hardware which had been modified would be found incompatible with the S/C, requiring a decision whether to change the GFE or the S/C. Changes in dimensions of some lunar tools, for example, dictated changes to the LM Modularized Equipment Stowage Assembly stowage interfaces. On the LM-6 color TV camera to Assembly mount interface, a .17 inch increase in the camera body over the envelope previously defined to the LM Contractor required camera relocation in the mount and a remake of its foam insert.

From a configuration control standpoint, the Configuration Control Panels (CCP's), which approve GFE changes, are responsible for ensuring the S/C interfaces are considered in processing these changes. Changes affecting the S/C should be forwarded to appropriate CCP or CCB, is required. Unfortunately, these GFE CCP's frequently approve a basic change without benefit of detailed analysis of the effect on the S/C interfaces, or significant changes in dimensions, etc., are implemented after the CCP sanctions a "basic" change.

4. Late changes to GFE or new S/C additions:

At times, changes occur to equipment, or there are new additions to stowage on a S/C fairly close to flight. In

such cases, ICD's have sometimes been waived for the first S/C that the ICD affects and implemented on subsequent spacecraft. In such cases, the potential risk of interface incompatibility is greater than usual and close coordination between interface parties, mockup and flight hardware fit check verifications are essential.

Hardware items that typically make this problem difficult are complex stowage items which require form-fitted stowage cushions, and items which physically attach to the S/C in flight and require accurate alignment during use. These latter items also require development of new brackets to accomplish their design objective, which generally delays establishment of final ICD inputs until design is frozen.

S/C Development and Configuration Reviews

Formal S/C reviews held during the Apollo program cover the following program phases: requirements definition; design and development; manufacturing and configuration inspection; test and checkout; and operational and flight readiness. Crew Compartment Stowage Review is the last formal true design review of the Crew Station--managed by both NASA/contractor crew station personnel. Crew Station Reviews held throughout the program are how the crew station personnel exercise the management and control described above. They cover a multitude of subjects and are the basic "working level" tool in effective crew station management.

Figure 24 summarizes the review process, the sequences in which the reviews take place, and their basic purposes. In discussion of reviews, which serve major purposes other than that specifically involving the crew station, the discussion is limited only to those aspects of consequence to crew station personnel.

Mockups are important in making crew station development reviews effective, and are a requirement for a number of the reviews in Figure 24. Such use merits notice and is given in the following discussion. The necessity for use of flight crews in design reviews also deserves discussion.

Mockup Utilization

Effective use of mockups is one of the most useful and important tools in the development of the current Apollo S/C and its GFE and CFE hardware; mockups serve in the following ways:

a. Design aid and verification tool for individual hardware items.

Aid designer in assessing his particular design for compatibility with general human factors, and other operational and functional requirements. Mockups should be used as aids to critique crew equipment design etc., especially if the item requires extensive handling, mating with other equipment, or other operations. In the beginning of the program, such items are best reviewed early by the designer, crew station personnel, and eventual equipment users--the flight crew. Such reviews allow

NASA-S-71-2311-V

APOLLO TECHNICAL AND CREW STATION REVIEWS

Figure 24

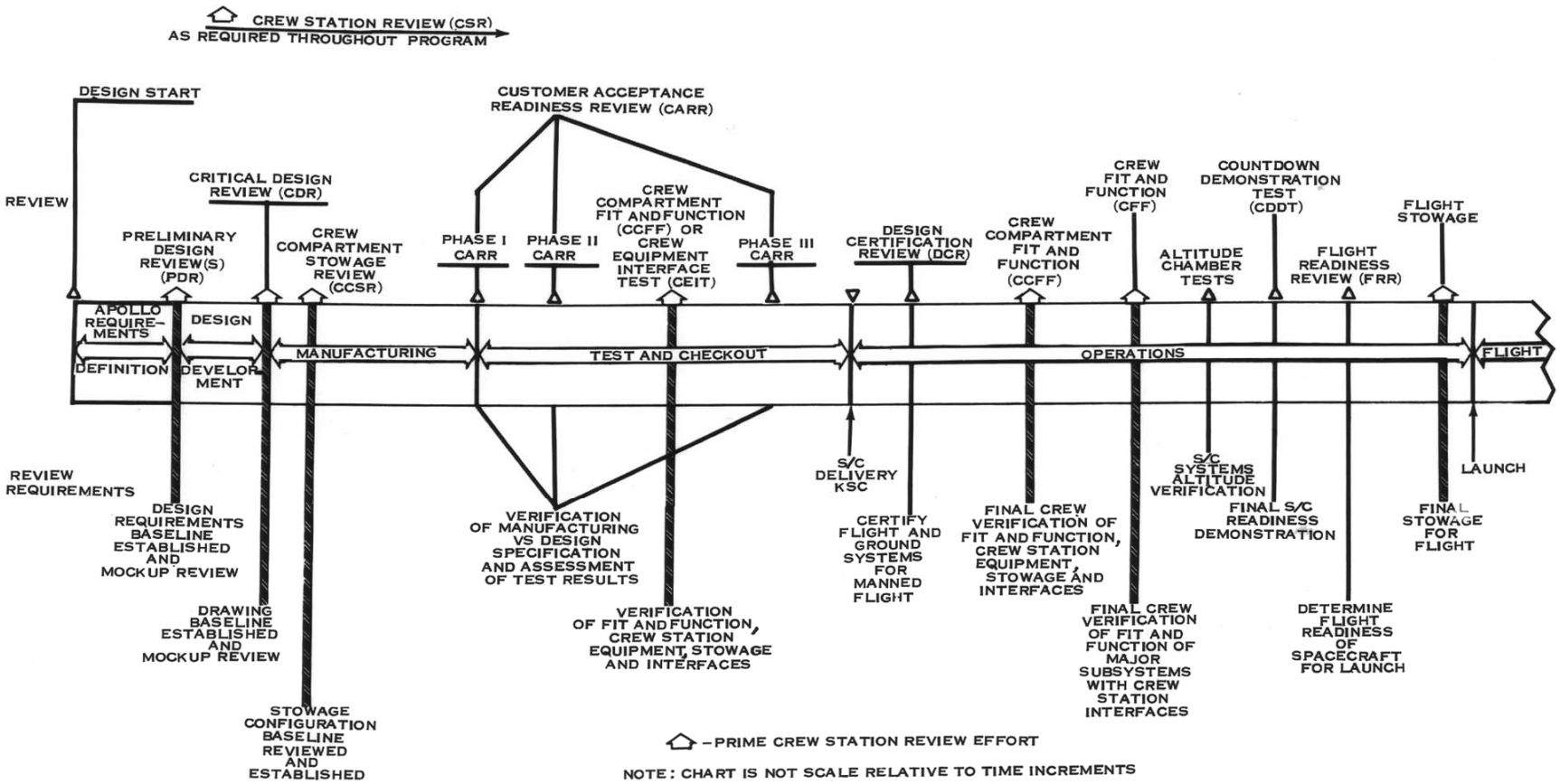

Modified from: Brig. Gen. Bolender, "Management Techniques Utilized by the Apollo Program Manager," Apollo Program Management, Staff Study, Subcommittee on NASA Oversight, Committee on Science and Astronautics, U.S. House of Representatives, 91st Congress, 1969.

suggestions on the design when they can be incorporated with minimal cost, schedule, or design problems. Even if the hardware mockup were used for the contractor's internal assessment alone, it is usually worth the cost and effort in the long run. Frequently, even the best designs depicted by a drawing, when transformed into hardware exhibit discrepancies previously unnoticed.

b. Design aid and verification tool for S/C configured mockups or major subsystems.

Use of both individual hardware item mockups and composite S/C configured mockups during the program was invaluable. This was particularly true where S/C changes were substantial, and the time from hardware design to production was short. Timely NASA/contractor agreement on design approaches saves considerable time and cost, allows schedules to be maintained, and provides greater assurance of success in subsequent reviews which involve many hardware items.

Dreyfuss in discussing the use of mockups in the development of ocean liners, indicates that "A highly practical form of research is possible when mockups of our designs are built." He also noted that "we learned much and saved time and money by not having to make expensive changes in the final ship...A complete interior mockup is almost standard in designing large transport planes."[36]

[36] Henry Dreyfuss, Designing for People (New York: Paragraphic Books, 1967), pp. 67-68.

Fit problems between hardware items has already been discussed. Use of high fidelity hardware in mockups provides fit verification between mating items, particularly those with electrical connector matings, physical fit into a stowage insert, or mechanical mating. In addition, use of such items, in effect, verifies the acceptability of critical interfaces between GFE and CFE as defined by ICD's.

c. Use in crew training, design change evaluations, and Crew Station Reviews.

These mockups, after basic design configuration reviews, are subsequently used for procedures development, flight crew training, design change evaluations, and Crew Station Reviews. Such use proved invaluable (and mandatory) as experienced in previous Mercury and Gemini Programs. Untimely mockup support of the flight crew and support teams may have broad, significant implications on training and general flight support.

> These mockup trainers are the only devices available to our flight crews and support personnel to exercise the mission timeline procedures essential to efficient execution of the flight plan. In their absence two major problems arise:
>
> a. A number of spacecraft tests are subject to inefficient planning and execution, and
>
> b. Our flight crew training schedules are distorted such that early in their assignment crews cannot use their time effectively and near flight date

the number of activities to be completed becomes excessive.[37]

Lack of training hardware or poor fidelity can cause transgressions beyond those problems already described, in that they affect the flight mission. Examples of such problems are:

1. During their Lunar Mission, the Apollo 11 flight crew was confused about the function of a control on their Portable Life Support System (PLSS). This control had apparently not been incorporated into training models used for preflight training.
2. After the Apollo 11 Mission, Astronaut Aldrin noted the visibility of the altimeter in the actual S/C was considerably improved over that in the Apollo Simulator, where many hours of training were spent. In this case, the S/C configuration was not a problem, as was the training item. Happily, the reverse situation did not occur, but such circumstances indicate it could have.
3. Subsequent to the Apollo 11 Mission, Astronaut Armstrong noted the photographic equipment used

[37] NASA-MSC letter PD8/L737-68, from Kenneth S. Kleinknecht, Manager Command and Service Modules, Apollo Spacecraft Program, to Dale D. Myers, Vice President Apollo Program Manager, Space Division North American Rockwell Corporation, Downey, Calif., letter by J. R. Goodman, February 21, 1968.

during training lacked fidelity in decals, exposure guides, etc., which were used in flight. Lack of fidelity in training or mockup equipment, in such a case, was a hinderance and precluded effective use of equipment during flight.

4. Lack of sufficient TV camera training equipment created difficulties for the Apollo 12 crew during mission and may have contributed to the lunar camera's "loss" due to a burned tube.
5. The Apollo 12 crew communications training equipment did not function the same as the flight gear; as a result, there was a loss of valuable mission time.
6. During the Apollo 14 mission, the camera configuration had to be changed from the flight plan because "the telemetry cable was not long enough to reach the camera mounted in the hatch window. This configuration was not checked prior to the flight because the bracket arrived late and no bracket was available for the simulator."[38]

Similar problems have occurred, but considering the vast quantity of configuration changes up to flight time, the overall record is fairly good. These examples should

[38] Apollo 14 Mission Report, MSC-04112, prepared by Mission Evaluation Team Approved by James A. McDivitt, Manager, Apollo Spacecraft Program (Houston, Texas: NASA, Manned Spacecraft Center, May 1971), p. 9-24.

serve as a reminder that this area requires continuous effort and should have adequate staffing by NASA and contractors.

d. Use in design verification tests in zero gravity simulation.

Another use of mockups is in the simulation of zero gravity via underwater testing, or by flying aircraft parabolas. Such use is required for design development and verification, flight crew procedures and flight training.

The fidelity of mockups during the CM redesign, and for uses defined above, generally parallels the developed hardware. Initially, mockup hardware items and S/C mockups were "conceptual" and representative of preliminary design. As the design evolved, the mockups became "low fidelity," representative of prereleased, nearly completed, hardware designs. Finally, mockup hardware became "high fidelity" or representative of production configuration: functional in size, shape, physical operation and interfaces, and perhaps in some cases, operational where it could carry electrical current or gas flow.

Mockups consisted of materials ranging from crude cardboard, wood, or styrofoam models, preliminary paper drawings glued to wood panels (as in the case of the CM display panels), to production configuration hardware of the cheapest materials which would satisfy fidelity requirements. For the most part, the contractor used

marked-up or "red-lined" drawings to produce the mockup. Design features not required for mockup fidelity were eliminated. Materials were substituted whenever possible. In this way, mockup costs were minimized.

As a result these requirements for mockups, considerable NASA and contractor time was spent defining mockup fidelity and design requirements. Appendix J includes the results of NASA/North American Rockwell negotiations on a "Memorandum of Understanding" of general S/C Mockup Update and Maintenance. Appendix K includes sample requirements for a zero-gravity simulation training article, required to support Apollo 15 and subsequent mission EVA testing. These documents should be particularly useful for similar efforts.

Flight Crew Participation

Engineering personnel participation in S/C design/development reviews is unquestionly accepted. The value of participation by flight crews in the development of S/C crew station hardware is required, but is not as widely and readily accepted. This lack of acceptance comes from the following: the generic problem associated with designers' S/C organizations not fully accepting the value of human factors or human engineering, and accepting the crew station as an entity requiring special attention (as compared with other S/C systems); the natural tendency of engineers and designers to feel their

product is acceptable by virtue of design ability and effort; and the general stigma involved when someone, not an engineer or specifically design orientated, critically reviews a designers or engineer's product.

There are a number of reasons flight crew participation in design/development reviews is productive:

1. The flight crew, by virtue of their unique position, generally have a good understanding of most S/C systems and subsystems and can provide insight into specific hardware or subsystems as they relate to overall S/C compatibility. (They are generally excellent systems engineers.)
2. The flight crew is usually experienced aircraft pilots with flight experience and other qualifications which make them especially adept at evaluating designs for handling equipment, and operating hardware and complex systems.
3. As eventual users of the end-product, they may have preferences which can and should be readily accommodated during the design/development stage. (Assuming the essential design requirements are not prostituted).
4. They frequently bring to bear previous S/C flight experience or technical points which have been overlooked, underestimated, or disregarded. In short, they add to the technical team's expertise.
5. Their inclusion adds to their knowledge of S/C design and preflight training.

The Soviet space team apparently also accepts and uses similar flight crew participation. Shelton discusses the original reluctance of the chief Soviet S/C designer, Sergei Korolev, to allow cosmonauts to review the design prior to its completion. Shelton reports on the development of the Voskhod spacecraft:

> In a noteworthy and sensible modification to previous cosmonaut-designer relationship, Sergei Korolev now insisted that cosmonauts participate directly in all design and modification decisions. Doubtless his decision grew out of the practical Vostok modifications suggested by Gherman Titov and other cosmonauts after they examined the virtually completed spaceship.
>
> Both Belyayev and Leonov and others, especially Feoktistov, participated in the development and testing of all new systems and equipment. Says Leonov: 'We were present at all tests and introduced the changes that we thought necessary. We were happy to see that the designers did not leave a single suggestion of ours without notice . . . . The tester is an important figure, of course. Nevertheless, we tested all the new units ourselves.'
>
> This new practice undoubtedly contributed enormously to the confidence with which Leonov and Belyayev ascended to the top of their rocket on the morning of March 18, 1965.[39]

Cosmonaut Belyayev reiterates this philosophy in his Voskhod-2 spacecraft report:

> We began our study of the spacecraft at the design office, long before the flight. As the ship was being designed, we took part in the testing of its systems and of the ship as a whole in complex ground tests. This method of learning the ship, especially our participation in the tests, gave us perfect mastery of its systems and confidence in its complete reliability.[40]

---

[39] William Shelton, Soviet Space Exploration, The First Decade (New York: Washington Square Press, 1968) p. 177.

[40] P. I. Belayayev, "Flight of the 'Voskhod-2'," trans. by NASA. Paper presented at the XVI International Astronautics Congress, Athens, September 13-18 (Washington, D. C.: NASA, October 1965).

The above discusses why the flight crew should definitely be included in the design/development review team, despite occasional resistance. The need for clarification of their role vs. the crew station engineer or designer is shown by the attitude expressed by Rogers, who was involved with NASA's Marshall Space Flight Center's flight crew evaluations:

> Design engineers are sensitized to astronaut operability from early in the design and development cycle. This is not to imply that all the battles are won or that the victorys were easy. Actually, several preliminary design reviews which 'miscarried' because of vociferous objections from the crew to poor human engineering aided in changing the 'training' philosophy. Unfortunately, it appears that the battle for a human engineering philosophy has to be fought on each new program. But . . . . maybe we human engineers do our homework better when we're on the defensive.[41]

It is the crew station engineer and hardware designer's job to define a technically competent set of design requirements using the methods and tools defined above, and to establish, modify or enforce them with the review systems described. It is also their responsibility to assure the end-product achieves what is intended, and is reliable and safe.

If there is "poor human engineering," it is <u>that engineering effort or approach which has to be modified</u>, not the "training philosophy." If such inadequacies are identified by astronauts, the program is better off despite the engineer's possible embarrassment.

If, however, the flight crew objects to a design which is technically acceptable and reliable, and can be reasonably defended by the designer/engineer, then the situation is different. The crew station managers should ensure conflicts are presented to management, and that

---

[41] Jon G. Rogers, "Simulation in the Development of Space Hardware," <u>Human Factors Society Bulletin</u>, XIII, 1 (January 1970), pp. 3 ff.

both sides are fairly represented. Generally, management will consider the extent of the change, the manpower and cost, and potential schedule problems. If the matter involves "crew preference," and this is technically acceptable, and the other factors are minimal, the decision may well favor the crew.

Another typical problem is the designer/engineer's attitude toward the flight crew's status. They may be in awe or subservient toward the crew, which can lead to role reversal--the astronaut will be in a position where he is asked how to design an item. In such cases, the NASA designer/engineer counterpart and the crew station engineer should be asked to participate. If the design area is properly managed, the crew will be shown proposed designs from the designer/engineer and crew station personnel's efforts and established requirements.

This is not to imply the crew's advice and evaluation should not be sought, even at an early stage. In some areas where flight crew operations of hardware items predominate, the need for advice and evaluation should be greater. There are, however, other aspects of any design which the design/engineer should be in a position to accommodate--design loads, mechanism design features, cycle requirements, materials use, manufacturing ease, reliability, etc. Such situations tend to put the engineers on the defensive, as Roger above, notes, because they are really not doing their job properly.

Crew Station Review Perspective

Integration with Spacecraft Design Reviews

The crew station reviews described here are in conjunction with the usual S/C reviews, which include the crew station as a subsystem in

addition to other subsystems. At these S/C reviews, the crew station personnel, as a team, review and report on the adequacy of the review material and the status of their subsystem. If mockups are involved, the crew station personnel handle this portion of the total S/C review.

In some Preliminary Design Reviews held on the CM, the reviews are centered only on crew station related designs, and as such, are managed by crew station personnel. In major S/C Preliminary Design Reviews (PDR's) and Critical Design Reviews (CDR's), the crew station design and related mockups play a prominent and vital role. The basic review philosophy, as shown by Figure 24, parallels the Apollo design requirements implementation, defined by Figure 14.

Crew Station Review Taxonomy

The following are special formal Crew Station Reviews: Preliminary Design Reviews (PDR's), Critical Design Reviews (CDR's), Crew Compartment Stowage Reviews (CCSR's), Crew Compartment Fit and Function (CCFF), and Crew Equipment Interface Test (CEIT), Crew Fit and Function (CFF) and flight stowage. Other Crew Station Reviews cover a variety of crew station related subjects. The term Crew Station Review (CSR) is therefore generic, and is applied to both the specific type of reviews listed above and other reviews required during the program.

Elements of the Crew Station Review

Basic elements of all CSR's are as follows:

1. Crew station personnel

   Includes NASA and contractor management personnel, appropriate designers, flight crew support team representatives,

and flight crews when available, or when their participation is required.

2. Other review team participants

Includes other contractors or subcontractors involved in some aspect of the review, e.g., International Latex Inc., suit contractor; Weber Aircraft, foldable couch contractor; or the LM contractor. Also, if a particular aspect of a subsystem design is under review, such as television stowage or operations, then the NASA technical monitor of this system and the contractor's counterpart would participate.

3. Review information or hardware

Such information could take any of the following forms:

a. Software

conceptual sketches; preliminary drawings and layouts; preproduction or production drawings; red-lined drawings, system schematics; operational procedures; certification test data, plans or results, or hardware failure reports; program test, spares, or mockup hardware plans; general related program documentation; ICD's; open items or action items from prior reviews, S/C tests, other meetings, etc.; and technical presentations or discussions.

b. Hardware fidelity

conceptual mockups; hi-fidelity mockups; assembled mockup hardware for testing; production hardware; and flight hardware inspection.

c. Hardware types

stowage installation; bracketry for various types of GFE or CFE equipment; various types of crew equipment items and assemblies; scientific experiment hardware; and other miscellaneous hardware items operated by the crew in flight.

It is essential the CSR minutes specify each information item of software or hardware reviewed, and the disposition of the review. This helps maintain the rigor of configuration control expressed in the previous section on S/C configuration reviews.

Review Process and Organization

The formal CSR's have the following basic phases:

1. General pre-review meeting:

   All review participants are assembled, and viewgraph presentation is made with handouts provided. The presentation normally follows this format:

   a. Definition of purpose of the review and its expected product. An example of this from a Unified Hatch Critical Design Review (CDR) is as follows:

      > Purpose--to evaluate the detailed design of the unified side hatch and to demonstrate the function of a production unified side hatch system and to close out review action items from a previous PDR on the hatch.
      > Product--NASA approval of the released design for continued manufacture and spacecraft installation.[42]

   b. The review organization, i.e., the technical and management personnel who have specific team assignments, are identified and introduced. For example, the following was presented at the above referenced CDR:

[42] Abstract of Unified Hatch CDR, Phase II (Downey, Calif.: North American Rockwell, Space Division, November 14-15, 1967).

Review Organization

Unified Hatch CDR--Phase II

Board

NASA Chairman	-	K. S. Kleinknecht
North American Rockwell (NAR) Chairman	-	D. D. Myers

Board Members

NASA	-	W. M. Schirra J. Lee
NAR	-	A. B. Kehlet N. J. Ryker

Review Coordinators

NASA	-	J. Goodman
NAR	-	C. W. Helms

Review Task Teams

		NAR	NASA
Inner Structure	-	A. J. Stefan	(Assigned At Meeting)
Heat Shield, Hatch Ablative Seats, Windows and Dump	-	E. L. Confer	
Flight and Ground Support Equipment Counterbalance	-	C. H. Lowry	
Latching Mechanism and Boost Cover	-	L. G. Thies	

c. Presentation of specific review items and a description of their degree of fidelity.

d. Presentation of detailed design requirements or concepts depending on type of review.

e. NASA review coordinator's general comments on items of special emphasis or interest and identification of NASA technical personnel acting as team leaders or contacts for other subjects.

2. Team reviews/mockup evaluations:

If the review is a major one in scope and number of participants (i.e., PDR's, CDR's), specific areas of key technical discipline are defined and NASA and contractor representatives responsible for these disciplines serve as joint team leaders. The specific teams defined above were applied to functions of the hatch system--a more common team breakdown is as follows: stowage; crew equipment; structures and mechanisms; scientific equipment; and suits and suit hardware. Special areas with marked signs, tables, and appropriate review data are set aside for use by these teams, and the leaders attempt to stay in this area as much as possible, organizing the team, answering questions, and reviewing data, drawings, etc.

If the review is a smaller one, where a team review of various subjects is not feasible, then individuals are designated as the effective team leaders with certain subjects which should be discussed. Any questions, comments, discrepancies or other concerns are forwarded to assigned team leaders. After discussion of the problem or question with the team and its leader, it is determined if the subject should be dropped, postponed, or action is required. If the initiator of this problem or question feels it necessary, written review action can be made even if the team

leaders do not concur with its content or necessity. Review action is either documented in a Request for Action (RFA) as used by the LM Contractor or Review Item Disposition (RID). Their generic designation, used previously in the armed forces, is a Request for Change or RFC.

In this portion, the hardware and software are reviewed and RFC's generated. Where mockups are provided and a large group of participants examine them, a schedule board for time-in the-mockup is maintained by the NASA review coordinator. For the Crew Compartment Stowage Review (CCSR), and others where the flight crew are the prime reviewers of mockup equipment, it is essential that the NASA review coordinator ensure that time is allotted in the mockup for crew station personnel, engineers, and designers. Time is particularily difficult to obtain when the review includes more than one set of flight crews, and shirtsleeve and suited conditions. Review by these technical personnel is, however, mandatory--they are responsible for the design of the hardware and should have the opportunity to review its physical configuration, as well as examine the discrepancies pointed out by others.

3. Request for Changes (RFC's):

A RFC,[43] may be written on equipment design, interfaces, design concept or layout drawings, configuration, stowage, or procedures. The RFC serves to inform the board which dispositions

[43]The term RFC will be used interchangeably with RFA's or RID's.

them that a review participant wishes action by the organization responsible for the specific hardware or procedure. The Apollo Configuration Management System is designed to permit only properly processed changes to be made. Thus, an RFC is a notice to the board to assign an appropriate action to close the RFC and process the paperwork necessary to effect a change. In many cases, the change requirement is not clearly detailed and the action assigned is to study the problem and submit a report.

Examples of RFC's (RID's in this case) are provided in Figure 25.[44] The team leaders and review coordinators are responsible for coordination of the RFC with other concerned parties, and to ensure the RFC clearly defines the problem and recommends a pertinent solution. I have reviewed a number of RFC's, and some are very poorly written; they might, for example, indicate they feel the design reviewed is unnacceptable but fail to explain reasons for this. Also, there is a tendency among attendees to specify a particular solution to a design problem rather than explain what basically needs to be done. Therefore, unless there is a good objection, proposed solutions should be stated in basic terms, allowing the designer and his NASA counterpart time to propose a good solution. These steps usually produce a simpler, better design. The NASA team leaders initials and/or comments are required on each RFC. The contractors initials or comments are also required--preferably

[44] Ibid.

Figure 25a SAMPLE RFC

RID NO. D101-C04-U7-05

NORTH AMERICAN AVIATION, INC.
SPACE and INFORMATION SYSTEMS DIVISION

CRITICAL DESIGN REVIEW
REVIEW ITEM DISPOSITION

DATE 11-14-67

ITEM NAME Lock Pin Release Knob ITEM NO.

SUBMITTED BY E. Koskins REPRESENTING NASA

DISCUSSED WITH C. W. Holms (NAA REP) L. G. Williams (NASA REP)

ITEM STATUS: (SEE REVIEW BOOK)
☐ A. SUBMITTED FOR DESIGN APPROVAL ☐ B. SUBMITTED FOR CONCEPT APPROVAL

(DO NOT SUBMIT RID'S ON C & D ITEMS)

COMMENT ON ITEM: MAKE COMPLETE, CONCISE STATEMENTS

Provide markings to indicate lock and unlock positions of the lock pin release knob. Markings should be visible to center crewman.

RECOMMENDED DISPOSITION OF ITEM REVIEWED:

(NON-SUBMITTAL OF RID ACCOMPLISHES DISPOSITION OF 1- UNQUALIFIED ACCEPTANCE):
☐ 2- ACCEPTANCE WITH SPEC CHANGE (DESCRIBE BELOW - LIST SPEC NO. AND PARA.)
☐ 3- ACCEPTANCE WITH MANDATORY CHANGE (DESCRIBE BELOW- LIST LAYOUT AND SPEC NO.)
☐ 4- DISAPPROVAL (GIVE REASONS AND RECOMMENDED ACTION BELOW)
OTHER- (EXPLAIN BELOW)

EXPLANATION:

See Above

DO NOT WRITE BELOW THIS LINE

FINAL DISPOSITION OF ITEM REVIEWED:
☐ 1- UNQUALIFIED ACCEPTANCE
☒ 2- ACCEPTANCE WITH SPEC CHANGE
☒ 3- ACCEPTANCE WITH MANDATORY CHANGE
☐ 4- DISAPPROVAL
OTHER

FURTHER REVIEW AT:
CDR #, MOCKUP #
OTHER
ESTIMATED DELTA WEIGHT:
(+) LBS
(-) LBS
SCOPE: IN OUT

REMARKS

NAA will do. Use markings shown on C04.

C. W. Holms
NAA

L. G. Williams
NASA

FORM 2928-Y NEW 3-65

Figure 25b SAMPLE RFC

RID NO. D101-004-UH-06

NORTH AMERICAN AVIATION, INC.
SPACE and INFORMATION SYSTEMS DIVISION

CRITICAL DESIGN REVIEW
REVIEW ITEM DISPOSITION

DATE 11-14-67

ITEM NAME Handle Pawl Control ITEM NO.

SUBMITTED BY James Shannon REPRESENTING MSC-LRD

DISCUSSED WITH C. W. Helms (NAA REP) L. G. Williams (NASA REP)

ITEM STATUS: (SEE REVIEW BOOK)
☐ A. SUBMITTED FOR DESIGN APPROVAL ☐ B. SUBMITTED FOR CONCEPT APPROVAL

(DO NOT SUBMIT RID'S ON C & D ITEMS)

COMMENT ON ITEM: MAKE COMPLETE, CONCISE STATEMENTS

The handle pawl control, when placed in the latch position prevents opening of the hatch from the outside. This is the only switch position which prevents hatch opening (from outside). This would prevent the recovery crew from getting inside to perform the postlanding procedural checkout (aboard recovery ships).

RECOMMENDED DISPOSITION OF ITEM REVIEWED:

(NON-SUBMITTAL OF RID ACCOMPLISHES DISPOSITION OF 1- UNQUALIFIED ACCEPTANCE):
☐ 2- ACCEPTANCE WITH SPEC CHANGE (DESCRIBE BELOW - LIST SPEC NO. AND PARA.)
☒ 3- ACCEPTANCE WITH MANDATORY CHANGE (DESCRIBE BELOW- LIST LAYOUT AND SPEC NO.)
☐ 4- DISAPPROVAL (GIVE REASONS AND RECOMMENDED ACTION BELOW)
OTHER- _____ (EXPLAIN BELOW)

EXPLANATION:

A safety pin should be added to the switch; if a safety pin cannot be added, holes drilled in the housing for safety wire would satisfy the requirements.

DO NOT WRITE BELOW THIS LINE

FINAL DISPOSITION OF ITEM REVIEWED:
☒ 1- UNQUALIFIED ACCEPTANCE
☐ 2- ACCEPTANCE WITH SPEC CHANGE
☒ 3- ACCEPTANCE WITH MANDATORY CHANGE
☐ 4- DISAPPROVAL
OTHER _____

FURTHER REVIEW AT:
CDR # _____, MOCKUP # _____
OTHER _____
ESTIMATED DELTA WEIGHT:
(+) _____ LBS _____
(-) _____ LBS _____
SCOPE: IN _____ OUT _____

REMARKS
WITHDRAWN-GSE pin now exists for neutral position-GSE only

C. W. Helms
NAA

L. G. Williams
NASA

2928-Y NEW 3-65

Figure 25c SAMPLE RFC

RID NO. D101-004-UH-07

NORTH AMERICAN AVIATION, INC.
SPACE and INFORMATION SYSTEMS DIVISION

CRITICAL DESIGN REVIEW
REVIEW ITEM DISPOSITION

DATE 11-14-67

ITEM NAME Vent Valve ITEM NO.

SUBMITTED BY L. Williams REPRESENTING

DISCUSSED WITH C. W. Helms (NAA REP) L. G. Williams (NASA REP)

ITEM STATUS: (SEE REVIEW BOOK)
☐ A. SUBMITTED FOR DESIGN APPROVAL ☐ B. SUBMITTED FOR CONCEPT APPROVAL

(DO NOT SUBMIT RID'S ON C & D ITEMS)

COMMENT ON ITEM: MAKE COMPLETE, CONCISE STATEMENTS

1. Vent valve "closed" indication is difficult to see.
2. Valve should not be operated unnecessarily during Mfg. & SC checkout

RECOMMENDED DISPOSITION OF ITEM REVIEWED:

(NON-SUBMITTAL OF RID ACCOMPLISHES DISPOSITION OF 1- UNQUALIFIED ACCEPTANCE):
☐ 2- ACCEPTANCE WITH SPEC CHANGE (DESCRIBE BELOW - LIST SPEC NO. AND PARA.)
☒ 3- ACCEPTANCE WITH MANDATORY CHANGE (DESCRIBE BELOW- LIST LAYOUT AND SPEC NO.)
☐ 4- DISAPPROVAL (GIVE REASONS AND RECOMMENDED ACTION BELOW)
OTHER- (EXPLAIN BELOW)

EXPLANATION:

1. Indicate valve "closed" position by marking locking tooth where valve is sealed.
2. Provide GSE lock device

DO NOT WRITE BELOW THIS LINE

FINAL DISPOSITION OF ITEM REVIEWED:
☐ 1- UNQUALIFIED ACCEPTANCE
☐ 2- ACCEPTANCE WITH SPEC CHANGE
☒ 3- ACCEPTANCE WITH MANDATORY CHANGE
☐ 4- DISAPPROVAL
OTHER

FURTHER REVIEW AT:
CDR , MOCKUP
OTHER
ESTIMATED DELTA WEIGHT:
(+) LBS
(-) LBS
SCOPE: IN OUT

REMARKS
1. Leave existing indicator and add indicator for tooth stowage position.
2. NAR will do.

NAA NASA

A 2926-Y NEW 3-65

a technical and managerial position on the RFC's merit, etc. NASA and the contractors have adopted a new RFC form which provides room for contractor's and NASA team captain's comments, as provided in Figure 26.

4. RFC flow:

Figure 27 shows the processing of the RFC from a control point where they are logged out until they are part of the minutes. The individual RFC's particularily at large reviews, become a popular entity which all attendees clamor for. To ease this pressure and provide some type of tool for all attendees, a RFC summary sheet is prepared before the pre-board meetings shown in Figure 27. An example of this form is given in Figure 28.

5. Crew debriefing and RFC review:

After the crew reviews the modifications in the mockup for several hours, the flight crew support team leader holds a crew debriefing where questions, problems, and other issues are covered. At this time, if feasible, it is good if other representatives concerned with aspects of the crew's inspection attend to answer questions, explain an item, or give reasons for its present configuration. This attendance usually eliminates writing RFC's which are often prepared because of ignorance.

The crew station review coordinator, at least by the end of each review day, calls for a final general review of RFC's prior to their submittal. This review provides understanding

Figure 26 REVISED RFC FORM

TYPE OF REVIEW VEHICLE DATE	REVIEW ITEM DISPOSITION		NUMBER COORDINATION
INITIATOR	ORGANIZATION	SYSTEM	TEAM NAME

DISCREPANCY/PROBLEM TITLE

JUSTIFICATION:

RECOMMENDATION:

CONTRACTOR'S COMMENT:

NR SIGNATURE

TEAM CAPTAIN RECOMMENDATION

CATEGORY ACTION SUSPENSE	REMARKS NASA SIGNATURE

BOARD ACTION

CATEGORY ACTION SUSPENSE	REMARKS:
ACTION SUSPENSE	☐ APPROVED ☐ DISAPPROVED SIGNATURE OF BOARD CHAIRMAN

TEMP FORM AAP 0124, 1-69

Figure 27. REQUEST FOR CHANGE (RFC) PROCESSING AND RESULTS

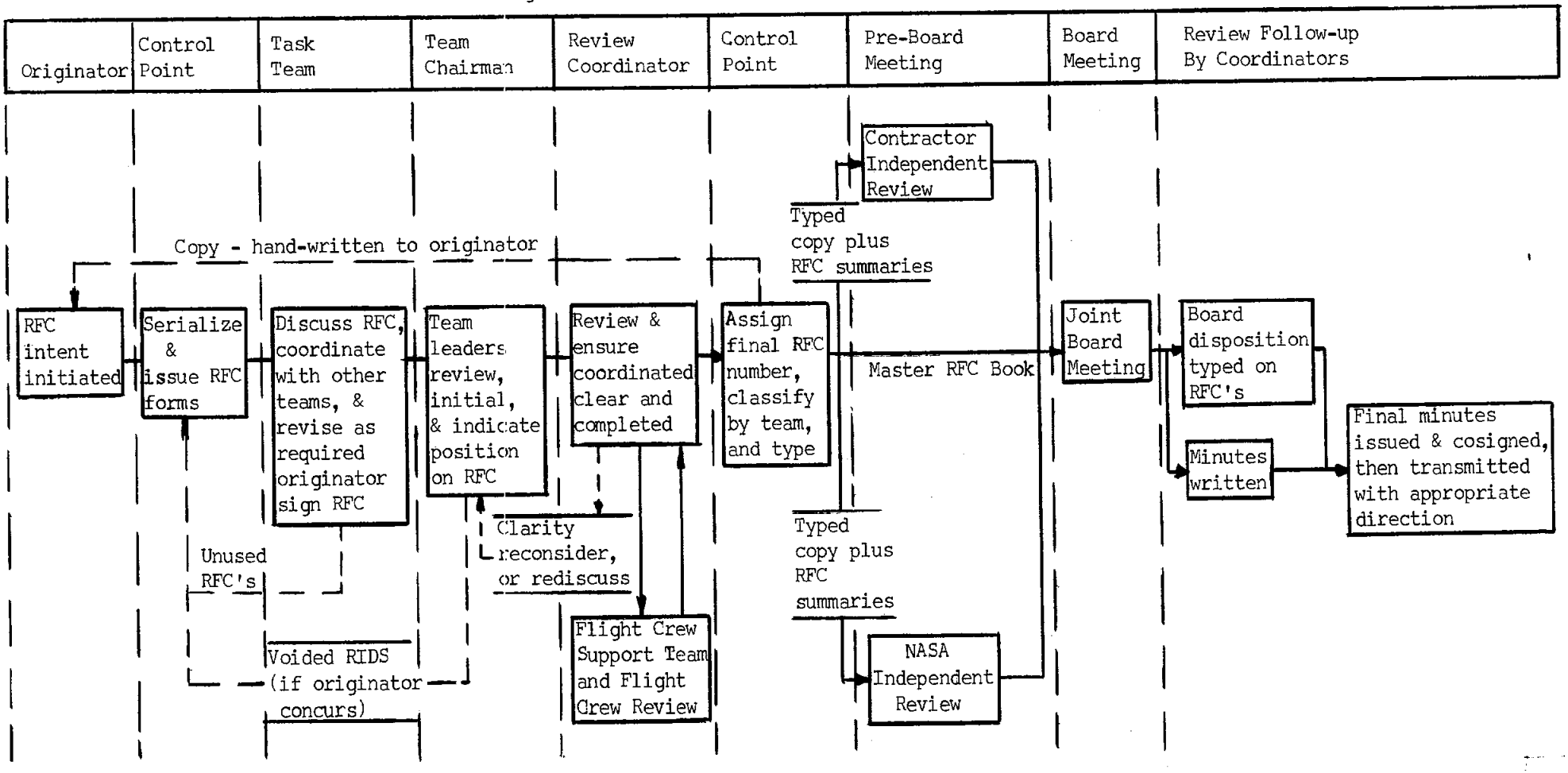

Figure 28 SAMPLE OF RFC SUMMARY FORM
DELTA CDR - Unified Hatch - 11-14/15-67

SYSTEM/SUBSYSTEM Unified Hatch

PAGE 1

RID SUBMITTED NO.	SUBJECT & COMMENT	EXPLANATION	BOARD REMARKS	STATUS
D101-004-UH-1 J. Lewis	Counterbalance System GSE Counterbalance System not demonstrated	Demonstrate GSE Counterbalance System ASAP	DEMONSTRATE 20 DECEMBER	
-2 J. Lewis	BPC Hatch Operation of the BPC hatch by the side hatch not demonstrated	Schedule review to evaluate side hatch operation of the BPC hatch	DEMONSTRATE 20 DECEMBER	
-3 J. Lewis	Charging Handle, Counterbalance Sys. Nomenclature missing	Add nomenclature	NAR WILL DO. NOMENCLATURE SHOWN O.K.	
-4 J. Lindemann	Selector Control Nomenclature-Put arrow on BPC Jettison selector knob and add words "BPC Jett" on housing for proper positioning of knob for launch.	NOTE: Same as temporary markings on CM 004 hatch	NAR WILL DO. USE "BPC JETT"	Needs Words
-5 E. Hoskins	Lock Pin Release Knob Provide markings to indicate lock & unlock positions of the lock pin release knob. Markings should be visible to center crewman	See Comment	NAR WILL DO. USE MARKINGS SHOWN ON 004.	
-6 James Shannon	Handle Pawl Control The handle Pawl Control, when placed in the latch position prevents opening of the hatch from the outside. This is only switch position which prevents hatch opening (from outside). This would prevent the recovery crew from getting inside to perform the post-landing procedural C/O (Aboard Recovery Ships)	A safety pin should be added to the switch. If a safety pin cannot be added, holes drilled in the housing for safety wire would satisfy the reqmt.	WITHDRAWN-GSE PIN NOW EXISTS FOR NEUTRAL POSITION-GSE ONLY	

of each RID by all participants and all participants can informally comment on the RFC. If the review is large, because of time limitations, this facet may have to be postponed until the pre-board, independent reviews shown in Figure 27.

6. Pre-board review meeting:

The pre-board review meeting and board meeting are generally on the same day usually morning and afternoon. NASA and the contractor hold separate meetings, and NASA and contractor management who are board representatives attend. They usually have not previously participated in the review. The purpose of both meetings is to review each RFC to ensure management understands the intent and reasons for the RFC and, to some extent, the degree and implications of the change. The NASA meeting is held near the mockups so hardware items can be inspected by management to ensure they have a conception of the hardware configuration and problem discussed. Usually, NASA's or the contractor's position relative to the RFC's is formulated at this meeting.

7. Board meeting:

At this meeting the NASA review coordinator reads each RFC and makes a technical explaination of it. The contractor responds with his technical and management position on the RFC. Discussions, debates, etc. may ensue. A closed circuit TV camera in the mockup has been frequently effective to show the design area at the board meeting. At other times, hardware

which can be readily removed from the mockup has been brought into the meeting for examination. The board members then reach a decision on the RFC. The review coordinators generally act as secretaries at the meeting, keeping notes on RFC dispositions. These notes are later used for preparation of meeting minutes.

Implementation of Results

The results of the CSR are written into minutes which include the information defined earlier and pertinent discussions, issues, agreements or disagreements. These minutes are generally typed at the contractor's (where almost all CSR's take place) and are cosigned by the crew station manager of NASA and his contractor counterpart. They are then sent to the contractor as a letter enclosure either in the form of technical direction or contractual direction, the latter signed by the contracting officer. Contractual direction is required where the direction provided is classified as "out-of-scope" from the original contract or its officially accepted changes. In this way, the minutes are binding and official. In some cases, NASA at a CSR would not concur with a design approach or wanted an existing design modified. The transmittal letter would reference the appropriate portion of the minutes or the hardware reviewed and redirect the contractor. In such cases, it is usually the practice to discuss implications of this redirection at the CSR, and hopefully agree on the available or feasible design alternatives.

Preliminary Design Reviews

The Preliminary Design Review (PDR) is a S/C review held to formally review the design approach of the Contract End Item prior to or early in

the detail design phase, as shown in Figures 14 and 24. Another purpose for the PDR is to review and approve Part I of the detailed Contract End Item Specification. Contractual implementation of Part I of the End Item Specification signifies PDR completion and establishes the Design Requirements Baseline.[45] The PDR is generally at the completion phase and signifies the beginning or 10 percent completion of design development. These reviews are intended to assure concurrence in the basic approach or concept being designed, and to assure agreement on the requirements used in evolving these concepts. Other intentions of the PDR are summarized in one NASA report:

> The preliminary design reviews (PDR or conceptual reviews) are a series of reviews at system, subsystem, and component level which are intended to assure contractor management and the customer that the proposed solutions satisfy the mission requirements; that they are within existing technologies; that manufacturing and test facilities are available in timely fashion; and that contractor personnel are technically qualified, or, conversely, that subcontracts are required. On the basis of results of preliminary design reviews, design requirements (specifications) are established.
>
> These reviews require the concentrated effort of a broad cross section of personnel and may well result in major redirection of of program effort. The preparatory phase of the preliminary review normally requires evaluation of major trade-off studies, as, for example, mission support equipment interfaces. Review findings may indicate the need for parallel development programs to assure the availability of an adequate design. In any case, the preliminary reviews must be complete evaluations of existing concepts in order to satisfy the management (customer and contractor) assurance requirement.[46]

---

[45] Apollo Spacecraft Program Configuration Management Manual, op. cit., pp. 4-1 and 4-3.

[46] Elements of Design Review for Space Systems, NASA SP-6502 (Washington, D. C.: NASA Office of Technology Utilization, 1967) p. 15.

As review requirements, PDR's include the following:

a. Establish the compatibility of the selected design approach for the Contract End Item with Part I of the detailed Contract End Item Specification.

b. Review pre-design drawings, schematic diagrams, layouts, sketches, envelope drawings and any other available design documentation to establish system compatibility of the design approach.

c. Review all materials and materials applications to assure compliance with established flammability criteria and guidelines.

d. Review and analyze all available breadboard models, mockups, circuit logic diagrams, packaging techniques, off-the-shelf equipment, etc., to establish the integrity of the design approach.

e. Determine those portions of the design approach which must be subjected to further detailed engineering analysis.

f. Review requirements for special tools, fixtures and facilities to establish the producibility of the selected design approach.

g. Identify interfaces which must be established with other contractor and government agencies.[47]

An example of a S/C PDR performed recently was the one for LM-10 and subsequent S/C modification program where the crew station changes included: modularization of stowage compartment in the LM ascent stage, inclusion of a urine collection system, additional expendibles of a longer lunar stay, major revisions to the Modularized Equipment Stowage Assembly in the LM descent stage, and other modifications delineated in the LM-10 and Subsequent Modification Program Statement of Work, as discussed under Contract Statement of Work, in the section on Design Requirements and Configuration Control. At this PDR, the crew station team reviewed various documentation on the above designs, and mockups of proposed

[47] Apollo Spacecraft Program Configuration Management Manual, op. cit., p. 4-3.

changes to the interior LM ascent stage, and the exterior modularized equipment stowage assembly. Mockups in both locations were primarily wooden, and represented rough approximations. Since the changes involved stowage of additional food, crew equipment, and many scientific items, the majority of personnel at this review came from these areas. Similar PDR's were held for the CSM's 112 modifications in general, and for the EVA provisions.

During redesign of the CM crew station in 1967, a series of six PDR's were scheduled to progressively review various aspects of the total crew station redesign. These reviews paralleled the S/C redesign status, and had the following advantages:

(1) Provided for early evaluation of the design concepts, at a time when redirection of effort could be accommodated with minimum effect.

(2) Allowed a relatively informal and comparatively small group of review participants. Attendees were primarily NASA and contractor crew station, flight crew and other personnel representing the technical subject under review.

(3) Provided a "single-minded" view of the technical subject permitting concentration of resources and efforts (i.e., mockup fabrication, design effort, personnel support) and providing a proper, unobscured focus of attention on the review subject. Later "full-up" mockup reviews allowed a view of the subject matter as part of the entire crew station design.

(4) Allowed accumulation of design changes to evolve into mockup form, thereby offsetting tendencies to overlook other areas. This also provided a means by which NASA and contractor management and S/C designers could update theirselves on the redesign progression.

(5) Provided for natural, logical review of the preliminary designs as they evolved, instead of at some arbitrary PDR date.

(6) Allowed for "relook" at a number of concepts modified from earlier PDR's, therefore providing an iterative review of items during their design progression.

Although this method of PDR implementation is unique in that it provided for PDR progressively through development, they were scheduled partly because of the advantages noted above, and partly because of the intense motivation to redesign the CM crew station properly after the S/C 012 fire tragedy.

A summary of the dates of these reviews and items reviewed at these six PDR's is provided in Table 2 . Photo 10 and 11 indicate the mockup representation at PDR-2 for specific review items. The closeout panels used were pointed sheet metal; the majority of stowage lockers were wooden, a few were sheet metal. Photo 12 , 13, and 14 show the mockup configuration for specific review items at PDR-4.

The general result of these PDR's was a review of the concept in the form of drawings, or mockups, and approval of the concepts as modified by the RFC's disposition and other PDR board action. The

Table 2. CM CREW STATION PRELIMINARY DESIGN REVIEWS (PDR'S) IN 1967.

PDR NO. 1
DATE March 15-17, 1967
TITLE OF REVIEW Unified Hatch, EVA Provisions and Crew Couch Mockup Review
ITEMS REVIEWED

(1) New unified hatch concept. Hatch was wooden and except for hinges had no functional parts. Dummy wooden linkages and cams illustrated the concept.

(2) Revised EVA provisions. Handrails added to the CM and the concept of EVA transfer from the CM to LM. Handrails were attached to exterior of the CM mockup and a dummy LM with its antenna and a portion of its newly added handrails was attached to the top of the mockup to show the EVA crewman's rank.

(3) Contractor's unitized couch with latest modifications incorporated, e.g., new hand-controller mounts on the couch for rapid egress, foot restraint design, couch positioning device, and short release system.

(4) Weber net couch concept developed under NASA contract.

PDR NO. 2
DATE April 19-20, 1967
TITLE OF REVIEW Crew Compartment Design Review
ITEMS REVIEWED

(1) Wooden stowage lockers (with piano type hinges) for aft bulkhead and upper equipment bay.

(2) NASA alternate proposed aft bulkhead stowage configuration.

(3) Mid-course temporary stowage lockers.

(4) Suit and helmet bag stowage.

(5) Miscellaneous stowage provisions.

(6) IVA assist hand holds, panel protection, and tunnel foot restraint.

(7) Fire abatement closeouts and S/C wire protection (wire trays).

(8) Relocation of glycol-diverter valve and cabin-pressure relief valve.

Table 2 continued--

PDR NO. 3
DATE May 2-3, 1967
TITLE OF REVIEW Tunnel and Docking Systems Design Review
ITEMS REVIEWED

(1) Combined forward hatch.

(2) Simplified probe.

(3) Revised docking ring.

(4) IVA restraint devices for tunnel operations.

(5) IVA tunnel lighting.

PDR NO. 4
DATE June 28-29, 1967
TITLE OF REVIEW Modifications Design Concept Review
ITEMS REVIEWED

(1) Stowage provisions:

Stowage coding proposal, stowage insert concept, other updated stowage provisions, and general internal arrangement--mixture of samples and layouts provided.

(2) Modified tool set--bench layout of hardware provided.

(3) Alternate fastener approaches--sample provided.

(4) Miscellaneous structural items, some updating results of previous reviews and redesign effort. A misture of physical hardware items in the mockup and layouts were provided.

(5) ECS Controls Modification. Presentation of initial location of added ECS controls and relocation of previous ones.

PDR NO. 5
DATE July 12, 1967
TITLE OF REVIEW Combined Forware Hatch and Docking System Review
ITEMS REVIEWED

Redesign effort on the forward hatch and docking system. Mockup reflected incorpation of RFC's from PDR 2.

Table 2 continued--

PDR NO. 6
DATE August 16-18, 1967
TITLE OF REVIEW Crew Compartment System Modifications
ITEMS REVIEWED

General Crew Station Configuration for:

Stowage provisions; crew operated mechanisms; ECS modifications; and communications and display panels

Specific review items included:

Oxygen mask, line routing, and protection of oxygen lines for emergency breathing system; sterilization system for drinking water; post landing ventiliation system duct and valve; fire extinquisher stowage and interfaces; TV camera mount; and miscellaneous couch redesigns.

Photo 10. CM PDR-2 Mockup Configuration for Evaluation of Closeout Panels

Photo 11. CM PDR-2 Mockup Configuration for Review of Stowage Locker Concept

Photo 12

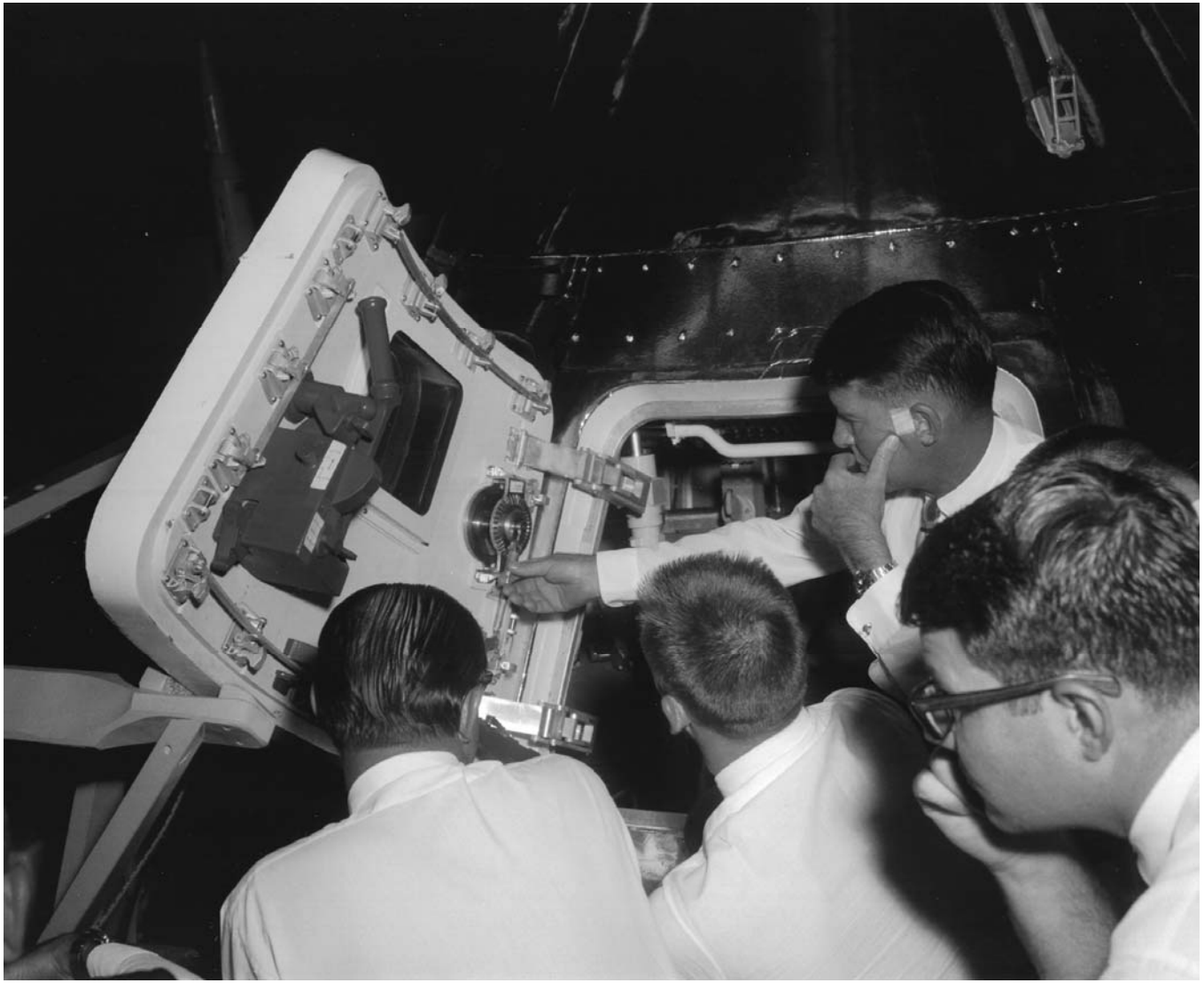

Photo 13. CM PDR-4 Mockup Configuration for Evaluation of Remote Controls.

Photo 14. CM PDR-4 Mockup Configuration for Evaluation of Cabin Repressurization Package and other Items

contractor was thus given the go-ahead to proceed with design implementation, with certain defined exceptions or modifications.

Critical Design Reviews

The Critical Design Review (CDR) is a review held near design completion to formally review the design of a Contract End Item or a series of end items representing a Master End Item Specification. The CDR's relation to review of design requirements is shown in Figure 14, its position in the technical and crew station reviews in Figure 24. It is the last basic design review held, establishing the drawing baseline to be used in S/C manufacture. It is normally held at the time of 90 to 95 percent design release. Requirements of the CDR are specifically to:

a. Establish the compatibility of the Contract End Item or items, as designed, with the Master End Item and End Item Specification; relate the design to the design approach established at PDR and updated to the point of CDR.

b. Assure compatibility of the design with materials flammibility criteria and guidelines.

c. Establish the system compatibility of the design by reference to Interface Control Documents (ICDs), schematic block diagrams, functional block diagrams, and all other available system engineering documentation to support the ICDs. ICDs should be essentially complete at the point in time of CDR.

d. Review analytical and test data and reliability apportionment and analysis available at this point in time to establish the integrity of the design.

e. Review and approve all drawings released or ready for release to manufacturing.[48]

Other intentions of a CDR are summarized in the following report:

Prerelease reviews are held just prior to the release of engineering drawings for manufacturing. They are applicable to

[48] Apollo Spacecraft Program Configuration Management Manual, ibid., p. 4-4.

all elements of the system including science experiments. They provide the greatest potential for discovery of detail problem areas. Here, as with prepackaging reviews, the activity usually is conducted at the component level. At this time the designers consider their design to be complete; all development and evaluation tests have been completed. The output data from the prior reviews, including action items, are available. Only qualification testing to demonstrate that the design has its specified capability remains. This prerelease review is the last chance to prevent premature submission of an immature design to qualification testing. (Historically, the designer's confidence is seldom justified and changes will be required as a result of qualification testing. During the Gemini Launch Vehicle qualification program, for instance, components experienced 176 failures in 962 tests, and the Mariner MM-64 experienced 58 failures in 805 tests . . .).

The prerelease review will be directed to the detail hardware and will cover the following points:

(1) Has the packaging altered the circuit characteristics (previously reviewed in the prepackaging review)?
(2) Has the designer considered the qualification test as a design requirement (and possibly the most severe requirement)?
(3) Have the parts and materials application data been updated to include latest configuration and part-use data?
(4) Did the evaluation testing really evaluate the hardware relative to its capability for passing qualification?
(5) Where qualification by similarity is claimed, are both the hardware <u>and the usage</u> really similar to the cited example? (An item may have been previously qualified but may now require additional testing because of changes in mission environments.)
(6) Can this design be manufactured, inspected, and readily tested?

Included are reviews of specifications for manufacturing checkpoints, acceptance test environment, quality controls, and qualification test stresses, as well as the storage, installation, transportation, ground test, and flight environments. Results of prototype manufacture and test are necessary inputs to this review in order to obtain a preview of the probability of success of the manufactured version. These questions are not, of course, intended as a check list but only to indicate the direction this particular review should take.[49]

---

[49] <u>Elements of Design Review for Space Systems</u>, <u>op. cit.</u>, p. 23.

The crew station mockups used at CDR's are high fidelity and generally represent production design. (Red-lined pre-released production drawings are used for mockup fabrication.) The mockups should be close to S/C configuration for that "block" of S/C. LM-10 and CSM-112 and their subsequent S/C, for example, have been previously described as a point where an effective new "block" S/C began. At the LM-10 and subsequent S/C CDR, the LM ascent stage modifications were high fidelity and were incorporated into an actual production S/C test vehicle. The CM CDR for S/C 112 and subsequent S/C also used high fidelity mockups of the basic crew station modifications. The CDR is therefore oriented towards approving the basic designs of a "block" or series of similar S/C, and not a specific S/C. Delta CDR's may be held on specific contract items which differ from this block, to formally review any significant differences between it and the contract end item which has completed the CDR. The mockup review aspects of the CDR are similar to that described under the Crew Compartment Stowage Review (CCSR) which follows, with the exceptions that: the CDR focuses on the block of S/C not a single one and the details of these S/C, and the engineering team is given ample time to inspect the mockup, on an equal footing with the crew. (At the CCSR the crew dominates the use of the mockup.) The crew station mockup's used are fully stowed and all mechanisms, and mechanical, and electrical interfaces are functional from a crew interface standpoint.

An important CDR review item is ICD's. Mockup utilization with representative GFE and CFE hardware provide a quality evaluation of the actual physical interfaces and frequently surfaces mating or fit problems. All crew station related ICD's are reviewed individually.

As noted earlier, all ICD's should be signed off by CDR time. As part of the crew station team minutes, a ICD status report is prepared for the board by the NASA team leader. Special follow-up action may be required to expedite the signoff of ICD's in which the concerned parties have reached no basic agreement.

Crew Compartment Stowage Reviews

A Crew Compartment Stowage Review (CCSR) is to verify the crew station's adequacy in meeting the specific S/C mission requirements and goals, includes the crew equipment, stowage of all items, and the fitting, functioning, and operation of all items and other flight crew operational tasks which do not require use of a simulator. The CCSR also verifies that the approved stowage provisions for that S/C satisfy mission and operational requirements. It provides the first truly hardware and procedural "shakedown" of these provisions for the prime and backup flight crews. The CCSR is held at the contractor's facility utilizing a mockup or a test article. GFE and CFE equipment used is flight configured, and all hardware incorporates the modifications resulting from CDR activities. The CCSR also validates the procedures for stowage and unstowage of the S/C, as well as the procedural content of the Crew Compartment Fit and Function Test (CCFF) or Crew Equipment Interface Test (CEIT) which will follow in the flight S/C. These latter procedures contain tasks and operations required for S/C systems operations, and provide representative mission requirements and phases.

After the S/C 106 CCSR, the CM CCSR's were discontinued. Later LM CCSR's were also stopped until LM-10. At this point in the CM program

the differences between CM 106 and 107 were minor. Flight crew attendance at these reviews became more pressing, and the availability of fairly representative and updated mockups at MSC for crew evaluation and training eliminated the need for the full-fledged CCSR's. CSR's were used to evaluate these differences between S/C.

CCSR Preparation

The review is scheduled as so on as possible before the turnover of the S/C in manufacturing to the contractor's test and operation organization, so the necessary design changes and rework can be made in manufacturing. It is also scheduled to precede CCFF/CEIT to allow S/C incorporation and fixes to discrepancies, revisions, etc., resulting from the CCSR. Contractor, GFE and other equipment suppliers, and flight crew are coordinated to set-up the date for the CCSR.

All crew equipment, scientific equipment, etc., to be used in the CCSR should be scheduled for delivery to the contractor's facility one month before the date of the review--absolutely not later than two weeks prior to the review. All of these items should be per the current stowage list for the vehicle undergoing review, and stowed according to the same Operational Checkout Procedure which will govern stowage at the CCFF. Issuance of an updated stowage list at this time is essential. The delivery of hardware to the contractor a month prior to the CCSR allows adequate time for receiving, processing and for checking the items and identifying shortages prior to the review. It also allows the contractor fit the GFE-to-CFE, and perform an internal pre-CCSR review of his own. This pre-CSSR, held at the contractor's option, is the

contractor's internal evaluation of the crew station, and helps him identify and correct some of the deficiencies found prior to NASA's review. Even if sufficient time is not available to correct a deficiency, the contractor has the time to do redesign work and may then propose solutions at the NASA review.

Bench Layout Review

As part of CCSR all crew equipment, detachable stowage lockers, couches, and other "loose" equipment readily removable from the mockup are laid on tables for engineering and flight crew inspection. No flight equipment is used at the CCSR, just hi-fidelity mockups. The Bench Layout Review fulfills several purposes:

(1) ensures, and verifies equipment readiness for the CCSR

(2) provides for detail inspection of each item and its individual operations, (where such operations do not involve a S/C mating etc.).

(3) serves to familiarize the crew and engineers with the equipment unencumbered by a mockup and supported by knowledgeable engineers, etc.

(4) allows easy verification of the mating of some components, and stowage fit details, nomenclature, etc.

(5) provides a useful method of allowing examination of a large quanity of the S/C items by a number of personnel, without trampling into and about the mockup for a long period.

Photo 15 depicts the physical setup of this layout. All items are checked for conformance to the stowage list, adherence to ICD's and other drawings, and are generally examined for their own individual design. All items

Photo 15. CM Crew Compartment Stowage Review, Bench Layout

stowed within a given S/C stowage locker are generally laid out next to the locker, or stowed inside as per stowage drawing. The actual working stowage configuration is compared to the stowage drawing for that area. The fit of items into their stowage cushions is also checked to ensure the item is not too loosely or tightly retained. RFC's frequently result from this part of the review.

General Mockup and Engineering Activity

The prime and backup flight crews, follow the agenda outline noted in Table 3, using the same Operational Checkout Procedure (OCP) which is used for the CCFF. These procedures are designed to evaluate the stowage effectiveness, accessability, interfaces, and operability of each piece of equipment to the extent that such evaluation is possible in a vehicle mockup. Mission phases, and detailed task analyses are used--the crews wearing suits or other personal gear as required by the mission phase being simulated. In the CM CCSR launch, orbital, and landing stowage configurations are verified. Other times of critical stowage activity are also assessed, e.g., tunnel hardware removal and stowage, transfer of stowage items from the CM to the LM and their stowage prior to separation, and the same type of transfer from the LM to the CM. The LM CCSR's obviously simulate different major stowage configuration and activities. A typical setup outside the CM mockup is depicted by photos 16 and 17. The use of three closed circuit TV cameras at pertinent locations in the mockup provided the participants with a good view of the internal mockup activity. Crew comments were transmitted over a loudspeaker and headsets were given key participants who would read the OCP procedures, take notes, and ask the crew explanatory questions. The TV provisions offered an exceptional means of viewing activities from a vantage point which no one inside really had.

Table 3. TYPICAL CREW COMPARTMENT STOWAGE REVIEW (CCSR) AGENDA

Typical Agenda

Day 1:

AM

8:30 - 9:30	Contractors Introductory Briefing
9:30 -12:30	Crew perform bench layout review of loose equipment
9:30 -12:30	NASA engineering inspection of crew station (unstowed and with couches removed) and of crew couches in support stand

PM

1:00 - 4:00	Crew inspection of crew station (unstowed and with couches removed) and of crew couches in support stand
1:00 - 4:00	NASA engineering perform bench layout review of loose equipment
4:00 - 6:00	Installation of couches into mockup
4:00 - 8:00	Prepack loose equipment per Operational Checkout Procedure (OCP) 3300
8:00 -12:00	Stow crew station per OCP 3300

Day 2:

AM

8:30 - 9:30	Crew No. 1 suit up and insertion
9:30 -11:30	Crew No. 1 conduct ventilated and pressurized portions of OCP 3366
11:30 -12:00	Crew No. 1 conduct walk thru of emergency egress procedures

PM

12:30 - 3:00	Crew No. 1 complete unsuited portions of OCP 3366
3:00 - 4:00	Crew No. 1 evaluate probe, drogue, and forward hatch stowage provisions (unsuited)
4:00 - 4:30	Crew No. 1 restow and evaluate crew station in entry configuration (unsuited)
4:30 - 6:00	Crew No. 2 perform informal review of crew station (unsuited)
6:00 -	Restow crew station

Day 3:

AM

8:30 - 9:30	Crew No. 2 suitup and insertion
AM PM 9:30 - 4:30	(Same as for Crew No. 1 on Day 2)

PM

4:30 - 6:00	Engineering evaluation of crew station
7:00	Deadline for submittal of RFC's
7:00	Restow crew station

Table 3 continued--

Day 4:

AM

9:00 - 12:00	NASA preboard meeting in mockup area and contractor meeting in different location.
1:00 - 4:00	NASA/Contractor Board meeting in Mockup Display Area Conference Room.

NOTE: During this day on a noninterference basis with the CCSR, frequently the next S/C's flight crew ran thru the mockup, suited and unsuited, and evaluated the same items that crews No. 1 and 2 performed during Days 2 and 3.

Photo 16. CM Crew Compartment Stowage Review (Area Adjacent to Mockup Shown

Photo 17. CM Crew Compartment Stowage Review; TV Monitoring System for Review Participants

After each major crew run in the mockup, or at least at the end of the day, the crew is debriefed. The Flight Crew Support team leader and his team usually take the action to write RFC's the crew defines at this debriefing.

The stowage drawing and stowage lists are diligently checked so the review usually produces good updates to these documents. Drawing and ICD reviews are held on items where problems develop so the cause can be defined.

Pre-Board and Board Meetings

These meetings conform to the description provided above. Lists of changes to the stowage list and of action items are documented in the meeting minutes. RFC's which are written against GFE are usually dispositioned as NASA action, and follow-up action taken by internal NASA memoranda to close them. If the review results in a number of modifications to the S/C, or the mockup was not fully representative, a delta-CCSR may be required. This review is held at a date negotiated between NASA and the contractor when the crew is available and the CSSR changes can be demonstrated or other modifications shown.

S/C Bench Layout Reviews

A Bench Layout Review is a systematic examination of stowed equipment held prior to the Crew Compartment Fit and Function (CCFF) test in the flight S/C. This detailed inspection of the equipment inventory is held to determine the condition of each piece of flight or flight equivalent GFE or CFE hardware, and its correspondence to program documentation, particularily the ICD's, and the Stowage list and drawing. The review is held in a special clean room area, with the equipment laid out in systematic matter on tables, similar to the CCSR Bench Review shown in Photo 15.

Participants are limited to the flight crew, support team, and other required crew station personnel; only a small team is allowed. Participants move from item to item, and examine each one for condition, flight status, correspondence to the stowage list, and drawing, ICD's, and other documentation. The item's serial numbers are documented. Hardware items are operated, or mated with the corresponding stowage cushion, insert, or other mating parts which can be evaluated on the bench. RFC's are written to cover any specific nonflight hardware discrepancies found. Discrepancy Reports (DR's) are filled out to define discrepancies, on any flight hardware examined. A review meeting is held between NASA and the contractor after the review to ensure understanding of the DR's and RFC's, to assign action items, and to prepare minutes for the review. Appropriate action is taken by NASA and the contractor to closeout the RFC's and DR's and to process necessary direction to close the action items.

Crew Compartment Fit and Function/Crew Equipment Interface Test

A Crew Compart Fit and Function (CCFF) Test is an operational procedure conducted at the vehicle contractor's facility at an appropriate time in the factory checkout sequence. This test is now usually performed on each S/C at KSC whenever a Crew Equipment Interface Test (CEIT), is performed at the factory. The CEIT is held generally without the flight crew and is a replacement for the full-blown, flight crew participation CCFF at the factory. The contractor's test pilots, who are trained extensively in S/C operations serve as replacements for the astronauts when the astronauts cannot support the CEIT.

The purpose of the CCFF/CEIT is to verify that the crew station, and its stowed and installed/ hardware (both GFE and CFE) are operationally suitable for meeting crew and mission requirements. This checkout occurs in the actual flight S/C, under clean-room conditions. Checkout consists of simulated mission useage, including unstowing and restowing all loose equipment, various degrees of operation of all crew and scientific equipment, and the mating of electric connections, bracketry, and other mating surfaces.

CCFF/CEIT Preparation

The test is scheduled to allow sufficient time to identify and correct discrepancies before delivery of the S/C. Completion of the CCFF, if held at the contractor's, should be made no later than 30 days before shipment from the contractor's facility. This time should allow for correction of any stowage or interface deficiencies indentified by the test.[50] The test should also be scheduled to incorporate as many CCSR changes or modifications as possible. The CEIT should follow these guidelines as well, but since the flight crew usually does not participate in it, and the test is less extensive, these schedule guideline are not rigoriously followed.

Contractor, GFE, and CFE crew equipment, and crew schedules are coordinated in choosing the date for the CCFF or CEIT. Crew participation is optional for the CEIT but mandatory for the CCFF. All crew equipment and hardware should be delivered to the contractor at least 30 days

[50] "Crew Integration Plan for Skylab," Revision A, op. cit., p. 11.

before the review. All items are checked against the stowage list for the S/C being reviewed, their serial numbers documented and the CCFF or CEIT preceded by the S/C Bench Layout Review described above. Open items from the Bench Review are closed as much as possible before the CCFF/CEIT. The Operation Checkout, drafted by the S/C contractor for use in the test, is given to NASA (particularly the crew station and crew equipment representatives) for comments before final issue. Prior to the review, the contractor completes the S/C stowage by using the OCP defining stowage procedures for that S/C. After this OCP is complete, and performance of the CCFF/CEIT verifies that items were stowed correctly, or need revision.

Performing the CCFF/CEIT

As indicated, these checkouts consist of verification of the stowage, and miscellaneous operations such as mating, connection, etc. In the CCFF, the procedures provide for mission-sequential manipulation and operation of all "loose" and installed crew station hardware by the flight crew, in suited and shiftsleeve conditions. This includes side hatch operation. In the CEIT suited operations are not performed. Launch stowage, in-flight stowage, and landing stowage, and other critical stowage phases are simulated in both type reviews. The functioning of all loose, stowed equipment and mating of all functional interfaces in the various mission locations or configurations provides evaluation of stowage effectiveness, general accessability of equipment, and verification of hardware-to-S/C mechanical and electrical interfaces (for GFE and CFE). Individual hardware discrepancies are often found on a hardware item configuration or operation, whether it mates or not with the S/C.

After completion of the review in the S/C, items which are clearly S/C deficiencies or have discrepancies are documented as DR's (Discrepancy Reports). Any other discrepancies or requests for modifications, etc., are documented on RFC forms.

Board Meeting

The review board meets immediately after the conclusion of the CCFF tests. It is usually chaired by the appropriate S/C Program Manager or his designee. This board reviews all results, and dispositions RFC's in a similar manner to the CCSR. Follow-up action is closed-out similar to CCSR's. Later in the CSM program, CCFF Board meetings at the contractors were not held, but the results brought back to MSC for action. KSC CCFF's retained the formal board and review processes.

Other Crew Station Reviews

This section describes the usual CSR's which occur during S/C development. The CSR is used as a means of exercising the features of crew station design and management control described earlier. It is the "working level" tool used by crew station managers and personnel to direct the efforts of associated personnel and resources toward problem solutions, closeout of action items, and other tasks associated with progressive development of a S/C crew station.

The CSR's may take any of the following forms: meeting only; a mixture of mockup and meeting; and primarily mockup review similar in a scaled-down version to CCSR's. The emphasis of the CSR changed during S/C development, from the first two to the latter, as CCSR's were deleted. The discussion which follows describes primarily CM

CSR's and the emphasis given them during development. Early Apollo Program CSR's were frequently called by the contractor's name for the crew station personnel assigned, e.g., the CM contractor used the term Crew Equipment Meetings. Other CM reviews, which were in fact CSR's, had different titles as follows: EVA Lighting Review, Tool Review, Oxygen Mask Location Review, Crew Equipment Bench Layout, and In-Flight Stowage Review Meeting. Crew station meetings were held as required through the CM and LM development, until formalization of the term "Crew Station Reviews." In February, 1968, the CM contractor was requested to provide CSR's twice a month at his facility. At that time, Apollo CM crew station related effort was intense and such reviews served several purposes and a typical agenda is as follows:[51]

1. Purposes:
    a. Provide a routine method of timely interchange of NASA/NR (North American Rockwell, CM Contractor) crew station/crew equipment status and information.
    b. Serve as a review of crew station related vehicle and vehicle training hardware support requirements and schedules.
    c. Provide for discussion and coordination of NASA/NR crew station/crew equipment and flight crew related reviews.
    d. Review proposed changes or additions to the S/C.

[51] NASA-MSC PD8/T763-BG-52-68-120 TWX, from J. B. Alldredge, Contracting Officer, Apollo C&SM Procurement Section, to North American Rockwell Space Division, Milton I. Drucker, Apollo CSM Program Contracts, Downey, Calif., Feb. 9, 1968, written by Jerry R. Goodman.

2. Agenda:

   a. Prior meeting action items (Contractor/NASA Report).

   b. RFC/Action item/ Squawk status from prior reviews--CCSR's, CCFF's, etc. (Contractor/NASA report).

   c. Status of mockup/training hardware: contractor's mockup, MSC mockups, KSC mockup, and tunnel hardware, zero gravity, and EVA training hardware under development. (Contractor report).

   d. Stowage status: list/drawing and problems. (Contractor report).

   e. Potential S/C crew compartment changes (Contractor/NASA report).

   f. Report and discussion on simulation testing (Zero gravity, aircraft and underwater testing, etc.)(NASA/Contractor report).

   g. ICD status report (Contractor report).

   h. Review of critical hardware problems as required (Contractor/ NASA report).

   i. Crew station review schedules plans (Contractor/NASA report).

   j. General key problem/constraints definition (Contractor report).

   k. Certification tests status (Contractor report).

   l. Summarize meeting action items.

Similar reviews were held with the LM contractor; these were geared more toward closeout of action items and formal CSR status.

At the time of deleting the formal CM CCSR's, NASA indicated there was a need for continuing review of changes to baseline crew station

configuration(s), for evaluation of those changes previously reviewed, and for timely support of evaluation of changes to close-in spacecraft, particularily those affecting spacecraft at KSC. To satisfy this need, NASA requested implementation of specific actions as follows:[52]

1. Immediate updating, and establishment of provisions for rapid updating of the contractor's mockup, to allow it to be used as a tool to support evaluation of crew station configuration changes and special problems. The contractor was required to be able to quickly vary the mockup's stowage configuration, as required, to mockup proposed design changes in S/C 103 and subsequent S/C.
2. Joint NASA/Contractor CSR's to be held on an as-required basis to review the changes incorporated in the mockup before their incorporation into the spacecraft. These meetings, it was noted, would also serve the following functions:
   a. Review crew station configuration status, including crew equipment, stowage provisions, GFE interface problems, ICD's, etc.
   b. Review and monitor the contractor's implementation of crew station changes by review of requirements, drawings, and physical evaluations demonstrations of hardware and interfaces.
   c. Monitor crew station/crew equipment hardware delivery, support requirements, and status.

[52]NASA-MSC letter PD8/L792-68-JC221-1050 from Jack Fuller, Contracting Officer, Spacecraft Contract Section, to Milton I. Drucker, Director, Apollo CSM Program Contracts Space Division, North American Rockwell, Downey, Calif., October 10, 1968. Written by Jerry R. Goodman.

d. Ensure proper and timely identification and interfacing of field changes affecting the crew station.

NASA chairman and standard participants were specified.

3. Establishment of special CSR's when a specific crew station-related problem, or a significant quantity of configuration changes, are identified as necessary for review by NASA and the contractor.

RFC's (RID's in the case of CM contractor) would be submitted to document discrepancies, etc., in a similar manner to the CCSR. The NASA CSR chairman was given the authorization to disposition "in-scope" RFC's informally with the contractor upon completion of the CSR. RFC's requiring contractual direction or other higher-level MSC management decision or action were specially handled subsequent to the CSR.

The use of CSR's as described above proved very effective and a beneficial means of supporting program goals.

A sample of hardware review items covered in a 1968 CSR of this type is provided below:[53]

1. Backup Waste Management Dump System (S/C 101 and subs)
2. Positive Locks for Oxygen Umbilical (S/C 103 and subs)
3. Center (CMP) Foldable Couch Stowage Requirements for normal Block II missions and S/C 104 mission (EVA provisions)(S/C 103, 104, and subs)

---

[53] Op. Cit., Enclosure 3.

4. Contingency Lunar Sample Return Container Launch Stowage Provisions and CM Entry Provisions (S/C 106 and subs)

5. TV Camera Interface Provisions

   a. Mount Attachment/Alignment
   b. Mount Color Coding
   c. Electrical Cable Attachment

6. EVA Thermal Sample Tether and Attachment Redesign - CCA 2355 (S/C 104)

7. Rotational and Translation Controller Modifications

   a. New Routing
   b. Right Angle Connections at S/C Interfaces and at Controllers
   c. J-Box Covers
   d. Segmented Teflon Covering
   e. Potential Interference of Wiring/Connectors with Couch Foot Struts

8. Redesigned Chlorination System Operations (S/C 101 and subs)

9. Electrical Grounding for LiOH Cannisters and Cannister Stowage Containers and Other Stowage Containers (S/C 103, 104, 106, and subs)

10. Electrical Grounding Provisions on the Foldable Crew Couch (S/C 103 and subs)

11. Rotating Guard for Crew Couch Armrest Locking Mechanism per CCA 2502 (S/C 103 and subs)

12. Manual Couch Strut Lockout Provisions (S/C 103 and subs)

Examples of effective special CSR's called to resolve a specific problem were those on the addition and integration of the Optical Range Finder on S/C 103, and the S-065 camera experiment on S/C 104. A CCB decision to add the Range Finder to S/C 103 came fairly late in the S/C flow. A CSR was called as soon as possible after the CCB decision. The same was the case for the S-065. A major portion of the results of the subsequent CSR on the Range Finder and other CSR items is provided in Appendix L, as a sample of CSR activity, contents, methods, and follow-up action.

CREW STATION ASPECTS OF MANNED SPACECRAFT DESIGN

BY

JERRY RONALD GOODMAN
B.S.M.E., Purdue University, 1958

THESIS

Submitted in partial fulfillment of the requirements
for the degree of Master of Science in Industrial Engineering
in the Graduate College of the
University of Illinois at Urbana-Champaign, 1972

Urbana, Illinois

629.471
G622c

Engineering

UNIVERSITY OF ILLINOIS AT URBANA-CHAMPAIGN

THE GRADUATE COLLEGE

January, 1972

I HEREBY RECOMMEND THAT THE THESIS PREPARED UNDER MY SUPERVISION BY JERRY RONALD GOODMAN

ENTITLED CREW STATION ASPECTS OF MANNED SPACECRAFT DESIGN

BE ACCEPTED IN PARTIAL FULFILLMENT OF THE REQUIREMENTS FOR THE DEGREE OF MASTER OF SCIENCE

Bruce A. Hertig
In Charge of Thesis

Head of Department

Recommendation concurred in†

Committee on Final Examination†

† Required for doctor's degree but not for master's.

D517

APR 28 1972

ACKNOWLEDGMENTS

This thesis was made possible by a NASA-Manned Spacecraft Center graduate program for a Master of Science degree in Industrial Engineering. I appreciate NASA's sponsorship and aid in obtaining the photographs and artwork which appear in this thesis.

Much of the material included in this thesis are from NASA sources or documents and my years of experience with NASA. This thesis represents my views and opinions as a result of this experience and does not in any way represent NASA's official position or viewpoint.

Special thanks to Richard S. Johnston of NASA, who strongly supported my desire to do graduate work and to write a thesis of this nature. I also wish to thank Joseph P. Loftus, Aaron Cohen, and Stanley Goldstein, also of NASA, for their support in achieving this effort. I am especially grateful to Mr. Loftus, who was a teacher and mentor during my work on the Apollo Program. The liaison support of Miss Jeanie Walker of NASA has been significant and greatly aided me in assemblying materials for this thesis.

I also wish to acknowledge and express appreciation for the helpful advice and suggestions of my advisor, Dr. Bruce A. Hertig. The advice and suggestions of Dr. Robert C. Williges of the Department of Psychology were also helpful and appreciated.

Finally, I wish to thank my wife Sally for her understanding, support, and patience during the time I was "pregnant" with this thesis.

TABLE OF CONTENTS

Page

INTRODUCTION..... 1

Crew Station Design..... 2
Preview of Thesis Contents..... 5

CHAPTER

I CREW STATION DESIGN/DEVELOPMENT: CONTROL AND MANAGEMENT..... 36

Crew Station Integration Organization..... 36

General Contract Effort..... 37
General NASA and S/C Contractor Responsibilities..... 38
Specific S/C Contractor Responsibilities..... 41
Flight Crew Support Teams..... 44
S/C Contractor Support Teams..... 45

Design Requirements and Configuration Control..... 46

S/C Design Requirements Documentation..... 46
S/C Configuration Control..... 61
S/C to GFE Interface Configuration Control..... 82

S/C Development and Configuration Reviews.....114

Mockup Utilization.....115
Flight Crew Participation.....122
Crew Station Review Perspective.....126
Preliminary Design Reviews.....151
Critical Design Reviews.....164
Crew Compartment Stowage Reviews.....167
S/C Bench Layout Reviews.....176
Crew Compartment Fit and Function/Crew Equipment Interface Test.....177
Other Crew Station Reviews.....180

II GENERAL INTERNAL CREW STATION LAYOUT/CONFIGURATION REQUIREMENTS.....186

Total Crew Functional Volume.....186
General Equipment Arrangement, Stowage/Compartment Layout, and Habitability.....198

Page

Basic Factors..... 198
Habitability..... 201
Equipment and Stowage Arrangement..... 203
Task Analysis and Detailed Requirements..... 205

Crew Size/Anthropometry, Mobility, and Visibility Requirements..... 206

Crew Size/Anthropometric Criteria for Spacecraft Design..... 206
Clothing Effects on Size..... 231
Suit and Suited Capabilities..... 231

Crew Compartment Closeout Provisions..... 257

Closeout Panels or Provisions..... 257
Debris/Equipment Traps and Nets..... 261
Wire/Tubing Protection..... 265

Windows..... 266

Current S/C Use/Design..... 266
General Functions and Requirements..... 271

Sharp Edges, Corners, and Protrusion Hazards..... 279

Basic Factors..... 279
Recommended Criteria..... 283

III RECOMMENDATIONS AND CONCLUSIONS..... 297

BIBLIOGRAPHY..... 301

APPENDICES..... 307

Chapter II

GENERAL INTERNAL CREW STATION LAYOUT/CONFIGURATION REQUIREMENTS

A content outline of a Chapter on this subject was provided in Table 1. This Chapter contains the following completed sections of that outline: total crew functional volume; general equipment arrangement, stowage/compartment layout, and habitability; crew size/ anthropometry, mobility, and visibility requirements; crew compartment closeout provisions; windows; and sharp edges and protrusion hazards. As noted earlier, the content and style of the sections vary by subject and knowledge level.

Total Crew Functional Volume

The total S/C interior size is substantially affected by the overall mission, the allowable payload, aerodynamics and vehicle body shape, crew size, scientific objectives, general systems and mission tradeoffs, equipment arrangement, stowage requirements, and other factors.

North American Aviation, in an Air Force-sponsored study of crew station design criteria for three types space vehicles, discusses the importance of vehicle body shape in affecting the total vehicle volume and the useful crew compartment volume.[1] They note that "tradeoff decisions must be considered from the standpoint of the overall body shapes with man as one subsystem. The volume which is available for

[1] J. A. Moran and P. R. Tiller, "Investigation of Aerospace Vehicle Crew Station Criteria," Final Report (Dayton, Ohio: Wright-Patterson AFB, Air Flight Dynamics Laboratory, July 1964).

the crewman has a profound effect on the system. Too little volume will adversely affect his effectiveness in the system, while excess volume will penalize the system by increasing weight and cost. The body shape chosen should, therefore, provide sufficient useable volume without jeopardizing the overall vehicle system."[2] Davenport, et al., report a typical growth in capsule structure weight as related to crew volume at 2,000 pounds for each 100 cubic feet of useable volume per man.[3] Weight growth in areas, such as the atmospheric and temperature control systems, thermal control system, and in other areas, was expanded by an increase in crew volume. Crew volume is obviously costly in many ways, and requests for specific quantities receive considerable scrutiny.

Frequent frustration is voiced by those involved in investigation and resolution of manned aircraft anthropometric fit problems, particularly for high-performance aircraft. The most usual complaint is that a cockpit is designed, and the man is "poured into it." The pilot may then have to adjust or compromise to function effectively. Costly and time delaying hardware modifications are the usual alternative. This situation is not unusual for man-machine systems. At the time when preliminary spacecraft system tradeoffs are made, and at the many times during development when the apportionment of S/C volumes are negotiated, the requirement for functional crew volume must be well understood; only then will it be adequately represented and documented.

---

[2] Ibid.

[3] E. W. Davenport, S. P. Congdon, and B. F. Pierce, "The Minimum Volumetric Requirements of Man in Space," Proceedings of American Institute of Aeronautics and Astronautics, Summer Meeting (Los Angeles, California: June 17-20, 1961).

Initially, the Apollo Command Module, for example, had an external size constraint of a symmetrical cone, with a 154" diameter base and height of 133.7". These dimensions included ablative material, a crew compartment pressure shell, and numerous internal and external systems. Overall volume was based on preliminary design effort and an understanding of the space allocations required for the basic systems and subsystems in the CM. The anticipated crew workspace was verified as acceptable at an early date in wooden mockups with subjects wearing the best approximation of Apollo spacesuits. A minimum value for the volume of this crew workspace was never specified. The basic requirement was that necessary workspace would be provided for accomplishing mission tasks by three suited crewmen, of a given size range. Continuous mockup reviews were held to assess the adequacy of the allotted volume. These also served to minimize infringements on these volume requirements. Figure 29 illustrates the effective shape of CM and LM volumes. Values for the internal volumes of the Mercury, and Gemini, Apollo Command Module and Lunar Module Spacecraft and U.S.S.R. Spacecraft are contained in Table 4.

There are numerous factors to be considered when comparing these S/C volumes. The Mercury Spacecraft was a one-man capsule in which the crewman was effectively constrained in a single position. His controls, displays and miscellaneous equipment were located within reach, or otherwise accessible to him. He remained suited for the entire flight. Flight duration was relatively short compared with Gemini and Apollo missions. The Gemini spacecraft was manned by two crewmen, who also were suited for the entire flight with, crew position still basically

Figure 29

NASA-S-71-2303-V

VEHICLE VOLUMES

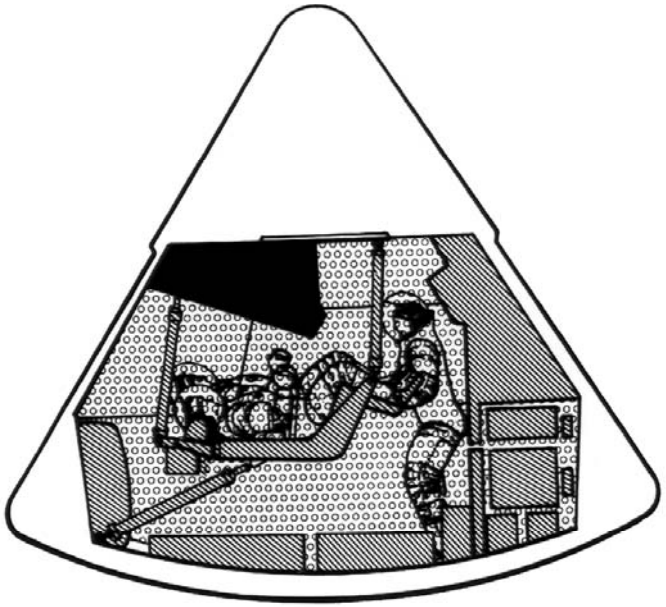

COMMAND MODULE

TOTAL PRESSURIZED VOLUME	- 306 FT^3
CREW, HARDWARE, AND PRESSURIZEABLE VOLUME BEHIND PANELS, ETC.	- 156 FT^3
EFFECTIVE FREE VOLUME	- 210 FT^3

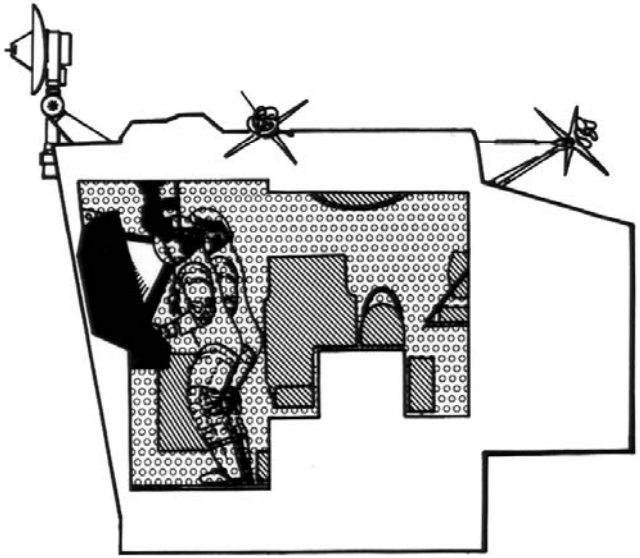

LUNAR MODULE

TOTAL PRESSURIZED VOLUME	- 195 FT^3
CREW, HARDWARE, AND PRESSURIZEABLE VOLUME BEHIND PANELS, ETC.	- 45 FT^3*
EFFECTIVE FREE VOLUME	- 150 FT^3*

*ESTIMATE

Modified from: J. P. Loftus and R. L. Bond, "Crew Tasks and Training, ' Lunar Landing Symposium (Houston, Texas: NASA-MSC, 1966).

Table 4. RELATIONSHIP OF CREW SIZE AND SPACECRAFT VOLUME

Spacecraft	Number of Crewmen	Pressurized Volume, ft^3 (a)	Effective Spacecraft Free Vol. ft^3 (b)	Habitable, Free Vol. per crewman, ft^3 (c)
Mercury	1	58	30	30
Vostok	1	90	75	75
Gemini	2	d 80	d 40	d 20
Voskhod	3	170	140	37
Apollo				
Command Module	3	e 306	e 210	e 70
Lunar Module	2	f 195	f 150	f 75
Soyuz				
Entry Module	3	170	140	107
Orbital Module	3	220	180	
Skylab				
Command Module	3	310	195	
Orbital assembly module, total	c	12,400	11,150	
Multiple docking assembly	0-6	1,150	1,000	g 3,700
Airlock module	0-6	600	450	
Orbital workshop	0-6	10,650	9,700	

[a]Pressurized volumes are derived from design data for U.S. spacecraft and from reports in literature for U.S.S.R. spacecraft.

[b]All effective free-volume estimates are based on geometric analyses.

[c]Assumes equal distribution of volume per crewman.

[d]R. M. Machel, et al., "Crew Station and Extravehicular Equipment," Gemini Mid-program Conference (Houston, Texas: NASA, 1966).

[e]Apollo Operations Handbook, Block II Spacecraft, Vol. I: Spacecraft Description, Apollo Document SID 66-1508 SM2a-03-Block II-1 (Revised: North American Aviation, October 15, 1970).

[f]Lunar Module Data Book, Volume II: Subsystem Performance Data - ECS, SNA-8-D-027II (Revision 2; Grumman Aerospace Corporation, Amendment 70, LED-540-54, NASA contract NAS 9-1100, 6/9/70), pp. 4.31.

[g]Total volume.

Modified from: Joseph P. Loftus, Jr., Rollin M. Patton, and Robert L. Bond, "Crew Functions, United States Manned Spaceflight Program," NASA, in press, 1971.

fixed, but the crew had more mobility in their station. Requirements for ingress and egress for Extra Vehicular Activity and other EVA-related operations, and longer duration missions, placed greater demand on the limited space. An open-hatch condition permitted the additional volume of free space required by EVA operations. Equipment location was still accessible to the crewmen from their seats. Volume requirements for the two-man crew, in this case, would be double that required if the S/C had been singly manned. The effect on the displays and controls design alone, for example, would have been significantly different in the overall crew station. A two-man crew, in lieu of a one-man crew, permits, on the one hand overlap of equipment use and extension of the area accessible from within the primary workstation. On the other hand, too close a proximity is encumbering and life support supplies would be increased.

In Apollo, the three crewmen in the CM have a primary and general control and display workstation for launch, reentry, and other critical mission phases. In addition, there are a separate guidance and navigation workstation, sleep stations, a work management area, and stowage items for mission support fairly widely distributed in areas outside the primary workstation. The mission itself, as noted, requires complete autonomy relative to supplies, etc. The S/C structure in Apollo has to support g-forces resulting from both water and land-landings of up to 78 g's. Parallel side walls inside the CM reflect the need for couch side struts for support during impact, and to permit a range of translation for these struts upon them during impact.

In addition, the volumes listed are predicated on a set S/C configuration at a given time during mission. Such volumes may change drastically during mission or alternate stowage phases when large items are temporarily stowed in the crew compartment. When such items as the probe, drogue, and pressure hatch are stowed in the CM, for example as shown in Figure 30, the available volume is considerably reduced. Likewise, at lunar launch, the previously fairly roomy LM is normally crammed with additional hardware items, leaving little volume for the crew. These volumes are, therefore, difficult to compare or use for generalizing about required volume. In the literature, a number of studies on required volume have been summarized. Restricted volume (confinement) and immobility can result in degrees of psychological and physiological stress, direct physical distress, poor personal relations, and other factors.[4] In 60 studies of confinement under terrestrial and space conditions reviewed by Roth, the relation between volume and mission duration was plotted (see Table 5).[5] This table describes three impairment zones. The upper-band defines a threshold of minimum volume per man which would be acceptable under most circumstances, even when modifying factors are not optimum. The lower-band describes an unacceptable threshold for most circumstances, even if modifying factors are optimum. Between the two bands lies a zone where acceptability depends somewhat on optimum habitability and personal

---

[4] E. M. Roth, ed., Compendium of Human Responses to the Aerospace Environment (Washington, D. C.: National Aeronautics and Space Administration, NASA CR-1205, III, November 1968).

[5] Parts a and b are from T. M. Fraser, "An Overview of Confinement As A Factor in Manned Spaceflights," Proceedings of the NASA Symposium on the Effects of Confinement on Long Duration Manned Space Flights (Washington, D. C.: NASA, Office of Manned Space Flight, November 17, 1966), pp. 1-7.

Figure 30 TEMPORARY STOWAGE OF PROBE, DROGUE, AND PRESSURE HATCH IN CM

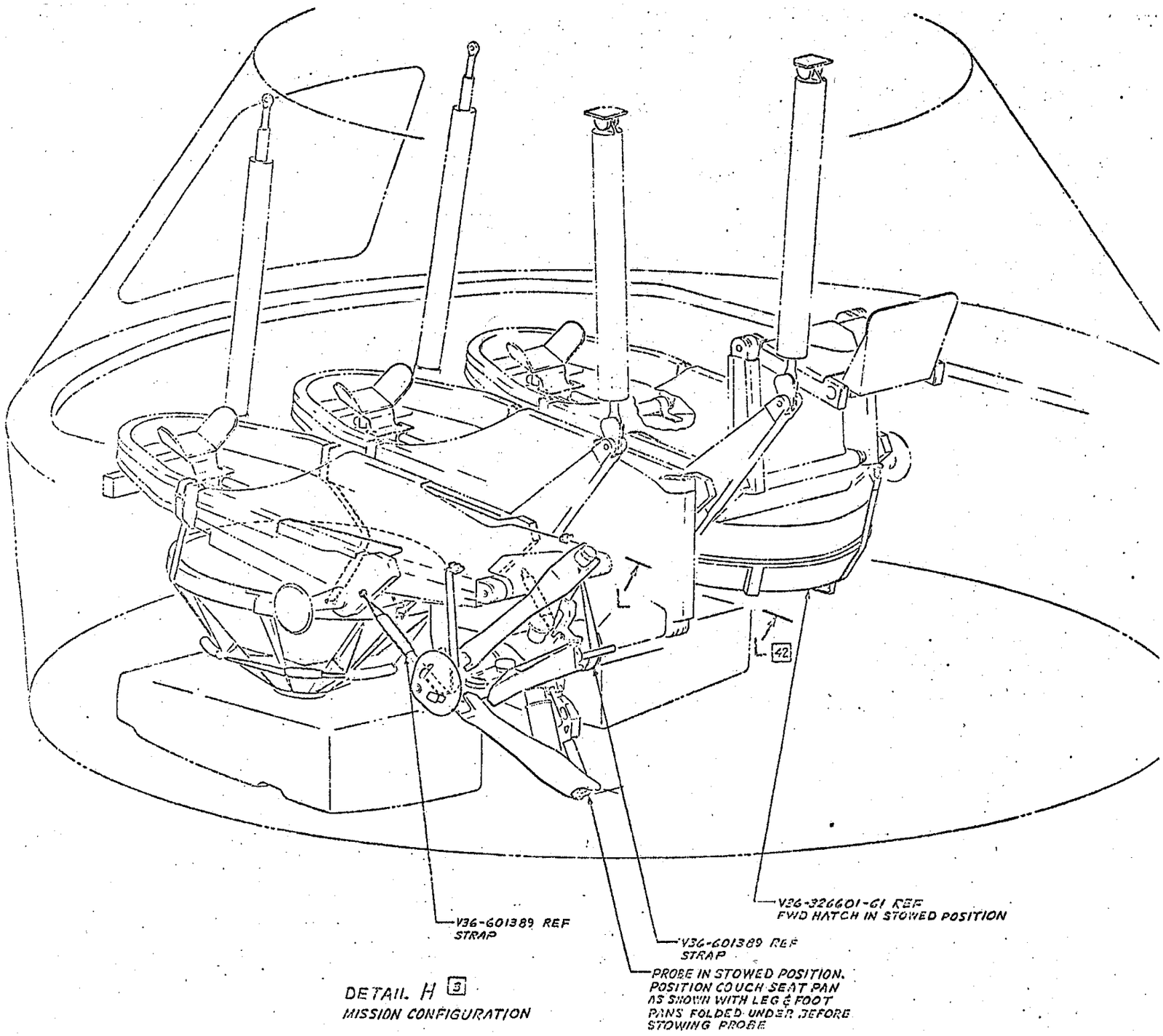

Source: Stowage Installation - Inflight, Crew Equipment, Drawing Number V36-781512 (North American Aviation, Inc., NASA Contract NAS 9-150) Revision B, July 7, 1967.

Table 5 CONFINEMENT STUDIES ON HUMANS

a. Extent of Impairment Resulting from Confinement

Type of Study	Operational Conditions	Volume per man (cu. ft.)	Duration (days)	Impairment[a] Psych	Impairment[a] Physio	References
Simulator Single	SAM one-man	47	7	3	2	AF-SAM-59-101, 1959
	SAM one-man	47	1½	2	1	AF-SAM-60-80, 1960
	Vostok one-man	90	?1	1	1	FTD-TT-62-1619, 1962
Simulator Multi	Lockheed-Georgia OPN-360	183-250	15	2	2	WADD-TR-60-248, 1960
	HOPE II	187	15	2	2	WADD-AMRL-TDR-63-87, 1963
	HOPE III	110	30	2	2	WADD-AMRL-TDR-63-87, 1963
	HOPE IV & V	110	12	2	2	WADD-AMRL-TDR-64-63, 1964
	HOPE VI & VII	187	12	2	2	WADD-AMRL-TDR-64-63, 1964
	Navy ACEL	75	7	2	2	NAMC-ACEL-383, 1958
	Navy ACEL	75	8	2	2	NAMC-ACEL-413, 1959
	N. A. A. conical	67	7	2	2	IAS Meeting, Los Angeles, 1962
	N. A. A. cylindrical	375	7	1	1	AIAA and ASMA Conf., L. A., 1963
	N. A. A. disc	800	4	1	1	AIAA and ASMA Conf., L. A., 1963
	SAM two-man	106	14	2	2	Aerospace Med., 30:722, 1959
	SAM two-man	106	17	2	2	Aerospace Med., 32:603, 1961
	SAM two-man	106	30	2	2	SAM-TDR-63-27, 1963
	Republic	211	14	1	1	RAC-393-1, 1962
	Douglas	250	30	1	1	ASME Conf., Los Angeles, 1965
	GE	215	30	1	1	GE Doc. 64-SD-679, 1964
	Martin Baltimore	133	3	1	1	MAR-ER-12693, 1962
	Martin Baltimore	133	7	1	1	IAS-63-18, 1963
	NASA Ames	61.5	7	2	2	NASA-TN-D-2065, 1964
	WADC long range	140	5	2	2	Aerospace Med., 30:599, 1959
Confined Chamber	U. of Maryland (Single)	1368	152	3	3	Univ. of Maryland, 1963
	U. of Georgia (Multi)	65	3	2	2	GEOU 226-FR, 1963
	U. of Georgia "	52	3	3	2	GEOU 226-FR, 1963
	U. of Georgia "	52	4	3	2	GEOU 226-FR, 1963
	U. of Georgia "	52	14	3	2	GEOU 226-FR, 1963
	U. of Georgia "	39	7	3	2	GEOU 226-FR, 1963
	USNRDL "	117	14	2	2	USNRDL-TR-418, 1960
	USNRDL "	117	5	2	2	USNRDL-TR-502, 1961
	Lockheed-Georgia (Multi)	125	4	1	1	WADD-TR-60-248, 1960
	"Coffin" (Single)	28	7	3	3	Science, 140:306, 1963
Cockpit	F-84	<30	2 1/3	2	2	WADD-TR-55-395, 1955
	WADD capsule	27.5	2	2	1	WADD-ASD-TR-61-577, 1961
Vehicle	APC M59	30	1/6	1	1	AHEL-TM-3-60, 1960
	APC M113	23.3	1/3	2	2	AHEL-TM-17-60, 1960
	APC M113	28	1/2	2	2	AHEL-TM-1-61, 1961
	APC M113	25.5	1	3	?	AHEL-TM-23-61, 1961
	APC M113	25.5	1	3	3	AHEL-TM-7-62, 1962
Submarine	Nautilus	1600	11	1	1	USN Med. Res. Lab. Rept. 281, 1957
	Seawolf	570	60	1	1	USN Med. Res. Lab Rept. 358, 1961
	Nautilus	570	4	1	1	USAF Med. J., 10:451, 1959
	Triton	570	83	1	1	"Unusual Environments and "Human Behavior" 1963
Chair	SAM	<25	4	1	3	Aerospace Med., 35: 646, 1964
Bed	Lankenau	<25	45	1	3	WADD-AMRL-TDR-63-37, 1963
	SAM	<25	28	1	3	Aerospace Med., 12:1194, 1964
	SAM	<25	14	1	3	Aerospace Med., 35:931, 1964
Spacecraft	MA-6	47	1/3	1	1	NASA Doc 398, 1962
	MA-7, 8	47	1/2	1	2	NASA SP-6, 1962
	MA-9	47	1 1/2	1	2	NASA SP-45, 1963
	Vostok I	90	1/2	1	1	FTD-TT-62-1619, 1962
	Vostok II	90	>1	1	2	FTD-TT-62-1619, 1962
	Gemini III	40	1/5	1	1	Gemini Mid-Program Conf. Proceedings, Part 1 & 2 MSC, Houston, Texas, 1966
	Gemini IV	40[b]	4	1	2	
	Gemini V	40	8	1	2	
	Gemini VI	40	1	1	1	
	Gemini VII	40	14	1	2	

a - Impairment classification grades 1, 2, and 3 indicate no impairment, detective impairment, and marked impairment, respectively.

b - Gemini Midprogram Conference, 1966, indicates this volume should be 20 cubic feet per crewman.

Table 5 - continued

b. Free Volume-Duration Tolerance Factors in Confinement

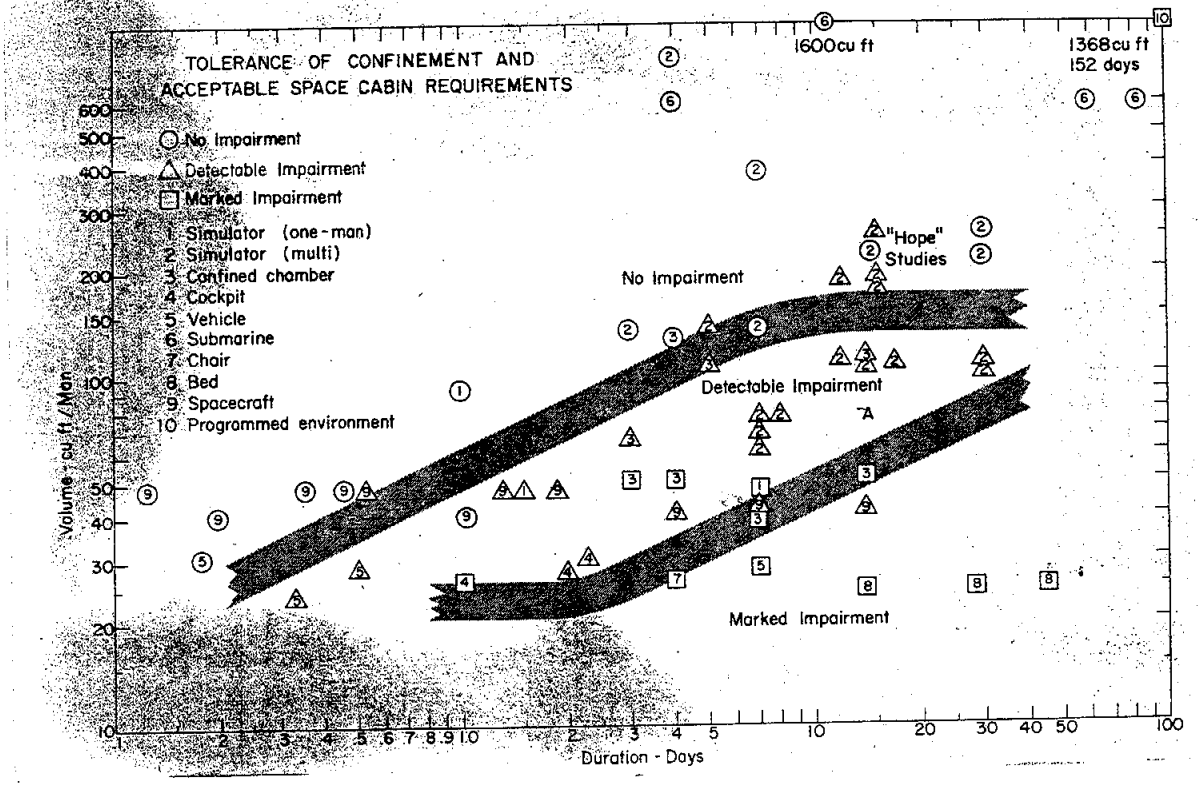

c. Threshold Volume Requirements According to Duration of Mission

Duration (days)	Threshold of acceptable volume - Cubic Feet	Threshold of unacceptable volume - Cubic Feet
1	50	25
2	75	25
3	90	25
4	105	30
5	115	35
6	120	35
7	125	40
10	135	50
20	140	70
30	150	85
>60	?150	?150

Source: T. M. Fraser, "Intangibles of Habitability During Long Duration Space Missions," NASA-CR-1084 (Washington, D. C.: NASA, June, 1968).

factors. Key factors that Roth reports which may alter the curve are motivation, discipline, and experience. These factors undoubtedly affected the Gemini missions reported in Table 5 as having a "detectable impairment" rating.

For missions extending beyond 60 days, Fraser provides a summary of current recommendations and suggests for long-mission durations (400 days) the minimum free volume per-man in a multi-man crew be about 200-250 cubic feet; the acceptable would be about 350-400 cubic feet, and the optimum about 600-700 cubic feet.[6] NASA in one report[7] recommends a "minimum living volume" of 350 cubic feet as a criterion for an earth-orbit space station, with between 9 and 15 crewmen, with resupply and crew rotation capabilities, and revisitation intervals of 3 or 6 months. This volume excludes working quarters, but includes bedrooms, personal storage space, galley, group dining area, and recreation area. In this case, equipment and storage space volume are included in the free volume, and specified volume is only a portion of required crew volume.

There are questionable features of the studies summarized by Fraser and Roth. Some of the facilities used and the work tasks performed during confinement may not be comparable to space flight situations. These studies for the most part assume that weightlessness environment has a negligible effect on the minimum crew volume and confinement. This assumption is questionable in view of orientation flexibility which is available during weightlessness. It is not

---

[6] T. M. Fraser, "Confinement and Free Volume Requirements," Space and Life Sciences, 1 (1968), 428-66.

[7] National Aeronautics and Space Administration, Standards and Criteria, Vol. II: Preliminary Technical Data for Earth-Orbit Space Station (Washington, D. C.: NASA, November 7, 1966).

clear whether some of the free volumes used to comprise the data include the volume of occupants, furniture, or equipment within the confines of the enclosed environment. It is suspected that only total internal volume of the enclosure, chamber, etc., was reported as free volume, instead of actual free volume.

In Davenport, et al., definition of volume is significant in its intent to clarify this area: "By way of definition the terms volume, crew volume or functional volume refer to the volume required by the crew for their essential activities. This is not the same as the total vehicle interior volume. The volume required for work, sleep, personal grooming, exercise, locomotion, and other crew functions is included, but the volume required by life support consummables, crew furnishings, and other equipments, and the unfilled volume lost in corners, narrow spaces, etc., is not."[8]

This definition realistically describes what the crew needs for truly "useable" volume. With this definition, the CM functional crew volume of 210 cubic feet noted would be further reduced, as would perhaps many of the volumes used in the literature. Davenport also points out that unique mission operations, equipment, and other systems constraints may impose specific volumetric requirements, such as long interconnecting passageways between compartments. They indicate such volumes "are not chargeable to man's volume requirement."[9]

---

[8] Davenport, et al., op. cit., pp. 4 and 5.

[9] Ibid., p. 6.

In this case, the arrangement of the S/C interior or general compartment layout required passageways. Regardless which system the passageway volume is accountable to, the crew station designer has to determine the appropriate volume or vehicle configuration required for the passageway in that vehicle.

We have so far discussed functional crew volume, which may vary for S/C type and missions, and which is generally difficult to specify. Gross estimates of this volume, if intended to serve some design function, have serious shortcomings and limited application. The crew station designer on a given S/C, with defined overall mission goal and activities, crew size, and subsystems, will have to incorporate those volumetric elements which sum to an overall volumetric requirement in the design. It is these individual volumetric requirements which are important, not their total. Their values and shapes are critical in assuring the crewman in his work and living areas will have adequate room to function effectively. Additional requirements beyond the functional ones may be required to satisfy the psychological and physiological factors of confinement mentioned by Roth. Further, controlled research in this area is required to define applicable criteria.

General Equipment Arrangement, Stowage/Compartment Layout, and Habitability

Basic Factors

The major configuration factor in the crew station of the current S/C has been created by requirements for crewmen orientation during high g-forces. These forces, imposed on the crew by launch, abort,

reentry and landing phases, are directed in the most physiologically acceptable direction--transverse. In this direction, the acceleration vector is in a plane perpendicular to the longitudinal axis of the body. As a result, the highest impacts loads are taken by the crewman forced down into his couch, in what is frequently termed an "eyeballs in" condition. This basic crewman orientation also dictates location of attendant critical controls and displays to a proximal position around the crewmen. This configuration trend will change with larger S/C's and varying mission requirements and capabilities.

General and specific equipment arrangement and crew compartment layout are dictated by many interrelated factors. These factors can be grouped into seven basic categories, as shown in Table 6 .

Some of these factors have significant effect on required stowage volume, S/C weight, and crew functional volume. Mission duration alone will significantly affect the amount and weight of food, water, eating facilities, crew equipment quantity and crew command structure, work/rest cycles, suit use, overall stowage volume required, and the numerous other factors listed. If the mission is essentially that of a ferrying vehicle, a different mixture of interrelated factors predominates. A requirement to wear spacesuits in vented and pressurized modes for contingencies will greatly affect the required size of tunnels, hatches, passageways, designs of individual equipment and controls to be operated, as well as their arrangement and general access. Special gas and electrical outlets and environmental control provisions, stowage, and other capabilities or provisions will be required.

Table 6. FACTORS IN GENERAL AND SPECIFIC EQUIPMENT AND CREW COMPARTMENT LAYOUT

1. Mission Related:

- Mission requirements/goals
- Abort requirements
- Contingency requirements
- Mission duration
- Operational requirements/tasks
- Scientific requirements/tasks
- Operations/task criticality and priority
- Operational sequences/timeline integration
- Resupply provisions
- Offloading capabilities
- General Environments, imposed controlled:
  - Structural loads
  - Gravity loads
  - Vibration
  - Temperature
  - Noise
  - Illumination
  - Humidity
  - Ventilation

2. Crew Affected:

- Crew quantity
- Crew command structure/division of responsibility
- Size/anthropometry of crew
- Work-duty/rest cycles
- General communication
  - Crew-to-crew
  - Air-to-ground
- Control/operation manning requirements
  - Information monitoring, visual and auditory
  - Physical movements required
  - Communications, visual or auditory

3. Shirtsleeves and Suited Modes:

- Shirtsleeves
- Partially suited (helmets/gloves off)
- Fully suited, ventilated
- Suited, pressurized
- Suit and suit support equipment donn-doff volume
- Equipment interfaces for suited operations
- EVA requirements of related support equipment

4. Intravehicular Activity, Mobility, Visibility, and Accessability Requirements:

- Shirtsleeves/suited modes
- Detailed task requirements
- Working volume/room required--with and without free orientation
- Visual accessability--with and without free orientation
- Support information or communication
- Translation/restraint aids
- Illumination available

5. Ingress/Egress and Cargo Transfer Requirements and Hardware:

- Requirements:
  - On-the-pad ingress and egress
  - Landing egress
- Crew and/or equipment transfer between S/C--IVA or EVA
- Specific EVA in-flight
- Hardware:
  - Hatches
  - Tunnels
  - Passageways
  - Transfer devices/remote handing
  - Cargo transferred
  - Transfer aids/restraints
  - Lighting

6. S/C Areas by Functional Unit Breakdown:

- Stowage area for equipment, expendables, etc.
- Systems and subsystem installation
- Work/duty station, vehicle management, hardware or subsystems operation
- Rest/leisure
- Recreation
- Exercise
- Sleep station
- S/C records and data management
- Personal area
- Water and food preparation
- Dining area
- Waste management area
- Personal hygiene accommodations
- Donning/doffing stations
- Equipment checkout/repair/maintenance area

7. Equipment/Equipment Layout:

- Overall spacecraft configuration constraints
- Command controls and displays
- Spacecraft subsystem equipment, controls, wiring, etc.
- Crew compartment closeout provisions
- Emergency equipment/controls
- Stowed and installed crew equipment and support provisions:
  - Crew apparel/suits
  - Food, water, and life support expendables
  - Pilot operational equipment
  - Crew equipment
  - Operational and support equipment
  - Hygienical and waste management provisions
  - Docking hardware
- Temporary stowage configurations
- Stowage configuration at various mission phases
- Couches and seating provisions:
  - Couch/seat articulation envelope
  - Couch stroking envelope (landing)
  - Couch/seat stowage
- Maintenance/sparing equipment
- Flammability and materials control
- Worktables

Habitability

Another key objective in the integration of S/C design and layout and the flight crew should be provision for good "habitability."[10] For spacecraft, habitability becomes a measure of the successful blending of man's living, operating, and requirements for well-being with the overall S/C, it's hardware and hardware configurations. Kubis indicates a system is considered habitable if man can function as man within its environmental confines.[11] He describes habitability as four components: physical, physiological, psychological, and social. Current emphasis in spaceflight has been on the physical and physiological areas. For the future, where we will have longer flights and larger space crews, Kubis emphasizes the psychological and social components will demand "very serious consideration." His point is well taken.

One obviously inherent problem of habitability is the lack of objective qualities of the term and the difficulty of establishing measurements. Unfortunately, emphasis on this subject has been mainly related to assuring adequate S/C functional crew volume.

U.S. spaceflight experience has shown that the amount and type of onboard stowage, the adequacy of functional crew volume, and general housekeeping requirements greatly affect the crew's operating efficiency and habitability. Astronaut Cooper emphasized this after completion of the Fourth Manned Orbital Mercury S/C flight:

---

[10] Webster's Third International Dictionary defines habitability as "the state of being habitable." Habitable, in turn, is defined as "the capability of being inhabited," and specifically, for a dwelling is denoted as "reasonably fit for occupation by a tenant of the class for which it was let, or of the class ordinarily occupying such a dwelling."

[11] Joseph F. Kubis, "Habitability: General Principles and Applications to Space Vehicles," in Proceedings of Second International Symposium on Basic Environmental Problems of Man in Space (Paris: June 14-18, 1965).

> On all our flights the cockpits have been cluttered to the point where the space remaining for the astronaut and the equipment with which he must work is very limited and inefficiently arranged. In most cases getting some of the equipment located and moved about provided more exercise than did the special onboard exercise device. Stowage of equipment is a very real problem that too often is not given enough consideration.[12]

On the Apollo 12 Mission, in the CM alone, from 1,100 to 1,200 items stowed onboard were handled or operated by the flight crew. Total operations of this equipment are estimated at 5,000 to 7,000. These items were stowed in approximately 40 stowage compartments, lockers, etc., in the CM or transferred to the CM from the LM. Valuable operating time and effort were spent in locating the equipment, unstowing it, setting it up, and restowing it. Thus, stowage management is important in S/C operation and efficiency. Poor stowage design and crew compartment arrangement result in inefficiency, loss of valuable and perhaps critical mission time, create irritability, and breed discontent among the crew. Additional amount of preflight ground training in this area is required.

Other factors which influence habitability are: the comfort offered by couches, sleep stations, general work areas, etc.; nominal cabin environmental control of temperatures, humidity, and noise; reasonable work/rest cycles; and ease of operation and handling of other equipment and general systems management. Hardware simple for design, easy and straightforward to operate, will enhance habitability. Negative design features found in a S/C serve as examples of detraction from the goal of making the S/C and its operations habitable.

---

[12] Mercury Project Summary including Results of the Fourth Manned Orbital Flight May 15 and 16, 1963, NASA SP-45, National Aeronautics and Space Administration Manned Spacecraft Center Project Mercury, Part 20: "Astronaut's Summary Flight Report," by L. Gordon Cooper, Jr., Astronaut (Houston, Texas: NASA Manned Spacecraft Center) p. 349-58.

Equipment and Stowage Arrangement

"Guiding principles of arrangement," as per McCormick,[13] which should be applied to general location of equipment and specific arrangement of components, are as follows.

1. Importance principle:

   The operational importance, or how much performance of the activity with the hardware component or system is vital or of relative importance to achievement of system's objectives, mission, or scientific goals. A listing should be made of such objectives by priorities.

2. Frequency-of-use principle:

   This refers to how much the system or components are used.

3. Functional principle:

   Grouping or arrangement according to the function of the components or system.

4. Sequence-of-use principle:

   Sequences or patterns of relationship that typically or frequently occur during use of components or system. In flight, such sequences may also be dictated by mission phases and operational timelines.

5. Location-of-use principle:

   This category is additional to the four described by McCormick. It involves the location where components are used or assembled for use. This principle is particularly important in stowage management, i.e., items which are primarily used in one area should be stowed in close proximity if possible.

To begin with general equipment arrangement/layout, it is necessary that sufficient basic requirements be defined in areas such as mission objectives and duration, size of crew, basic S/C subsystem concept

[13] Ernest J. McCormick, Human Factors Engineering (3rd ed.; New York: McGraw-Hill, 1970), pp. 415-48.

definition, and overall constraints. During the initial phase of the Apollo Spacecraft Redesign Effort in 1967, requirements such as that listed below were sent to the Apollo contractor for implementation.[14] The crew compartment interior size and subsystems were basically defined at this stage, and the contractor was designing an Apollo S/C configuration for a Block I earth-orbiting mission concept and a Block II lunar-landing mission concept.

Crew Compartment Modifications:

1. Maintain clear crew accessability in the lower equipment bay and center aisle.

2. Equipment location shall reflect sequence, frequency-of-use, and use location.

3. Equipment required for emergency return or entry shall be accessible to pressurized crewman.

4. Standard mission duration reflected in stowage of lithium-hydroxide cannisters and other consumables shall be 11 days.

5. Design for stowage from baseline list (provided with the direction).

6. Use all available volume for stowage--all containers to be standard subassembly of S/C--whether full or not.

7. Use prepackaging where possible for all containers.

8. Configuration of stowage to be primarily based on lunar mission concepts.

9. Design for use of current unitized couch.

10. Stowage to be outside of maximum attenuation envelope of stroked couch/crewman assembly.

11. Stowage to be added or deleted per basic crew compartment configuration as agreed to and documented by NASA and contractor. (Provided in a referenced set of meeting minutes.)

---

[14] Letter PM5-L693-67-BG52-267, to North American Aviation, Inc., Space and Information System Division, Downey, California, from NASA Manned Spacecraft Center Contracting Officer, Apollo C&SM Procurement Section Subject: Contract NAS 9-150, Block II Crew Compartment Modifications, March 20, 1967, written by Jerry R. Goodman.

Task Analysis and Detailed Requirements

Given some basic definitions of requirements and general application of the guiding principles' arrangement, application of task analyses by the link approach described by Woodson and Conover should be considered, especially for large space station types of S/C.[15] This approach provides for arrangement of components (man-machine) based on the visual, auditory, and control links between them and an analysis of the task to be performed.

Additional detailed task analyses, such as that recommended by the NASA George C. Marshall Space Flight Center,[16] should be sufficiently thorough to determine the following:

1. Specific points where the operation is carried out.
2. The approximate body positions usually assumed to perform the operation.
3. The space and clearance reqruiements necessary to accommodate the body positions and movements required by the operation.
4. The requirements for access or passage to the work point.
5. The size and weight of tools and other equipment which will be carried to the work point.
6. Environmental conditions which require protective garments and devices.
7. Space requirements for the manipulation of the items involved in the operation, e.g., fasteners, tools, modules, covers, and test instruments.

---

[15] Wesley E. Woodson and Donald W. Conover, Human Engineering Guide for Equipment Designers (3rd ed.; Berkeley: University of California Press, 1970), pp. 2-158-60.

[16] Standard Human Engineering Design Criteria, MSFC-STD-267A (Huntsville, Alabama: George C. Marshall Space Flight Center, National Aeronautics and Space Administration, September 23, 1966), para. 5.5.2.1.1 "Decision Factors," pp. 213-14.

8. Light and space requirements to enable crewman to see and control manipulations.

9. Electrical, chemical, thermal, or mechanical hazards which require additional clearances for safety.

10. Passage through the space of other personnel, equipment, vehicles, or loads not involved in the specific operation of that work point.

11. Reductions of useable space by doors, shelves, covers, and other protuberances opening into the workspace, as well as reductions from test equipment, tool boxes, workstands, or other hardware temporarily stowed or brought into the area.

Crew Size/Anthropometry, Mobility, and Visibility Requirements

Crew Size/Anthropometric Criteria for Spacecraft Design

It is essential basic anthropometric criteria be established early in the S/C development and be updated and checked throughout the program. Percentiles of a given population is the usual method for defining such criteria. In the Apollo Program, initial specifications for spacecraft design used Air Force dimensions.[17] The CSM technical specifications for crew size and number read as follows:

> The CSM design parameters shall accommodate three crew members between the 10th and 90th percentile, as defined in WADC-TR 52-321, Anthropometry of Flying Personnel, for the following dimensions: weight, standing height, sitting height - erect, buttock-to-knee length, knee height (sitting), hip breadth (sitting) shoulder breadth (bideltoid), and arm reach from wall. All other body dimensions shall fall within the 5th and 95th percentiles as defined by WADC-TR 52-321. Percentiles for body dimensions undefined by applicable documents will be estimated by appropriate statistical and anthropometric methods.[18]

---

[17] H. T. E. Hertzberg, G. S. Daniels, and E. Churchill, Anthropometry of Flying Personnel-1950, WADC Technical Report 52-321 (Ohio: Wright Air Development Center, Wright-Patterson AFB, September, 1954).

[18] CSM Technical Specification Block I, SID 63-313 (Rev. ed.; Downey, Calif.: North American Aviation, February 22, 1965), NASA Contract NAS 9-150, paragraph 3.4.1.2.3.1.

These criteria were appropriate at the start of the Apollo Program, but had inherent fallacies and later created design problems. This issue merits careful attention by human factor engineers and S/C designers--whose natural tendency is to look for textbook-type values on anthropometric data. Nine major points to emphasize on this are discussed below:

1. Anthropometric data must be representative of the population using the equipment, i.e., the astronauts in this case. Morgan et al. (1963), recommends a minimum of 50-100 persons for a statistical sample "large enough to yield reliable results that are reproducible from one sample to another".[19] At the start of the Apollo Program only a few astronauts were in the program, thus precluding establishment of astronaut-tailored anthropometric standards.

   Use of the Anthropometry of Flying Personnel data seemed appropriate since the astronauts were Air Force or other military service pilots. However, the design of a spacecraft which unknown astronauts would fly years later further frustrated establishment of astronaut-tailored criteria. Later new astronauts were brought into the program, and death or job changes revised the astronaut population. Thus the design was made for a relatively small, unknown and changing group.

[19] C. T. Morgan, et al., Human Engineering Guide to Equipment Design (New York: McGraw-Hill Book Company, 1963), p. 491.

In reviewing the population from which the Air Force data were drawn, less than 50 percent of the sample represented pilots--the balance were other flying personnel, i.e., flight engineers, gunners, etc.[20]

Astronauts need to be more representative of this pilot group than of other flying personnel. Navy pilots, which the astronaut corps also draws on, in some cases are significantly different from comparable Air Force pilot measurements. For example, U. S. Navy aircraft pilots' 5th and 95th percentile standing heights are 66.3 and 74.1 in., compared with Air Force flight pilot dimensions of 65.2 and 72.6 in.[21] With the flux of civilian pilots and scientists to the astronaut ranks, establishing anthropometric criteria for a truly representative astronaut population become even more suspect and difficult. Further discussion as to the relevancy of the Air Force data to the astronaut population will be made below.

2. Population from which dimensional data are established will change and anthropometric criteria must be continuously checked and revised.

Bennett, et al., who discuss the growth in population of army flying personnel in 1961, indicate that "the whole defense establishment of tomorrow is going to have to provide more space in all man-machine systems for taller

[20] Anthropometry of Flying Personnel-1950, op. cit., p. 105.

[21] Morgan et al., op. cit. p. 509.

and larger operators."[22] A comparison of the 1950 Air Force data, with recent 1967 Air Force data, reveals some significant dimension changes between the 1950 and 1967 Air Force population. For example, the 1967 5th and 95th percentile dimensions exceed comparable 1950 dimensions as follows: standing height by .7 in. and .8 in.; weight by 7.5 lbs. and 10.2 lbs.; shoulder breath (bideltoid) by .9 in. and .7 in.; and sitting height-erect by .9 in. and .8 in.[23]

3. Individual astronaut dimensions will vary over time.

Changes in weight or muscle development, which normally occur for individual astronauts, necessitate a program of ongoing measurements at least every two years. Dimensions such as hip breadth, sitting height, are particularly sensitive to aging and general physical condition.

Difficulties experienced with obtaining these data are discussed in another point listed below.

4. Do not design for the "average man" or for only specific "percentile men." Also, do not accommodate only the smallest and largest of the ranges adopted, but combinations of these.

Many documents and books discussed the inherent problem of using an average man in systems design. Criteria such as design for the 5th to 95th percentile are often misleading

---

[22] Edward Bennett, James Degan, and Joseph Spiegel, Human Factors in Technology (New York: McGraw-Hill Book Company, 1963), p. 157.

[23] Personnel Subsystems Handbook, AFSC DH-1-3 (Rev. ed.; Ohio: Air Force Systems Command, Wright-Patterson AFB, January 1, 1970), pp. 1-7.

for those unfamiliar with anthropometry. Small, medium, large, or 5th, 50th and 95th percentile manikins perpetuate the assumption that people are usually small, medium, or large. The critical point is that a person varies in body dimensions, frequently over a wide range. For example, the data below on Astronaut John Young reveals a wide range for the eight critical dimensions specified in the NASA CSM design parameters quoted earlier.

Dimensions	Measured equivalent percentile per WADC-TR 52-321[24]
Weight	65
Standing height	48
Sitting height--erect	65
Buttock-to-knee length	60
Knee height (sitting)	50
Hip breadth (sitting)	87
Shoulder breadth (bideltoid)	98
Arm reach from wall	15

Thus, the 95th percentile man, or any percentile man, is as illusory as the average man; a 95th percentile man must be 95th percentile for every dimension.

[24] Measurements, taken by Air Force specialists and NASA-MSC personnel, Dec. 7, 1962.

Such a man would be huge, and resemble a gorilla in bulk and body proportions.

Given that a person usually has a variety of percentile values for body dimensions, various combinations of specific high-and-low percentile dimensions may be as critical as using only the extreme dimensions. For example, changing the dimensions of A, B, C, D, and E in the side view of Figure 31 for different combinations of 5th and 95th percentile values would produce many combinations of reach and visual field capabilities, and most probably require seat adjustment for surfaces 1, forward or backward, and 4, upward or downward. Suppose the body dimensions for A, B, D and E were the 95th percentile and the body was moved backwards. If dimension C was a 5th percentile value, surface 7 would be difficult to reach without bending forward, and surface 6 even more difficult to reach.

If the same man had 5th percentile dimensions for A, B, D, and E, but had a 95th percentile dimension C, a different situation would exist. When consideration of body breadth is added, the motion and vision range of the seated man are more complex (see view looking downward, Figure 31).

Consider, for example, the following combinations of F and G, and C: F and G equal to 5th percentile, and C equal to 5th percentile; F and G equal to 95th percentile, and C equal to 5th percentile; F and G equal to the 5th percentile

Figure 31 SEATED CREWMAN

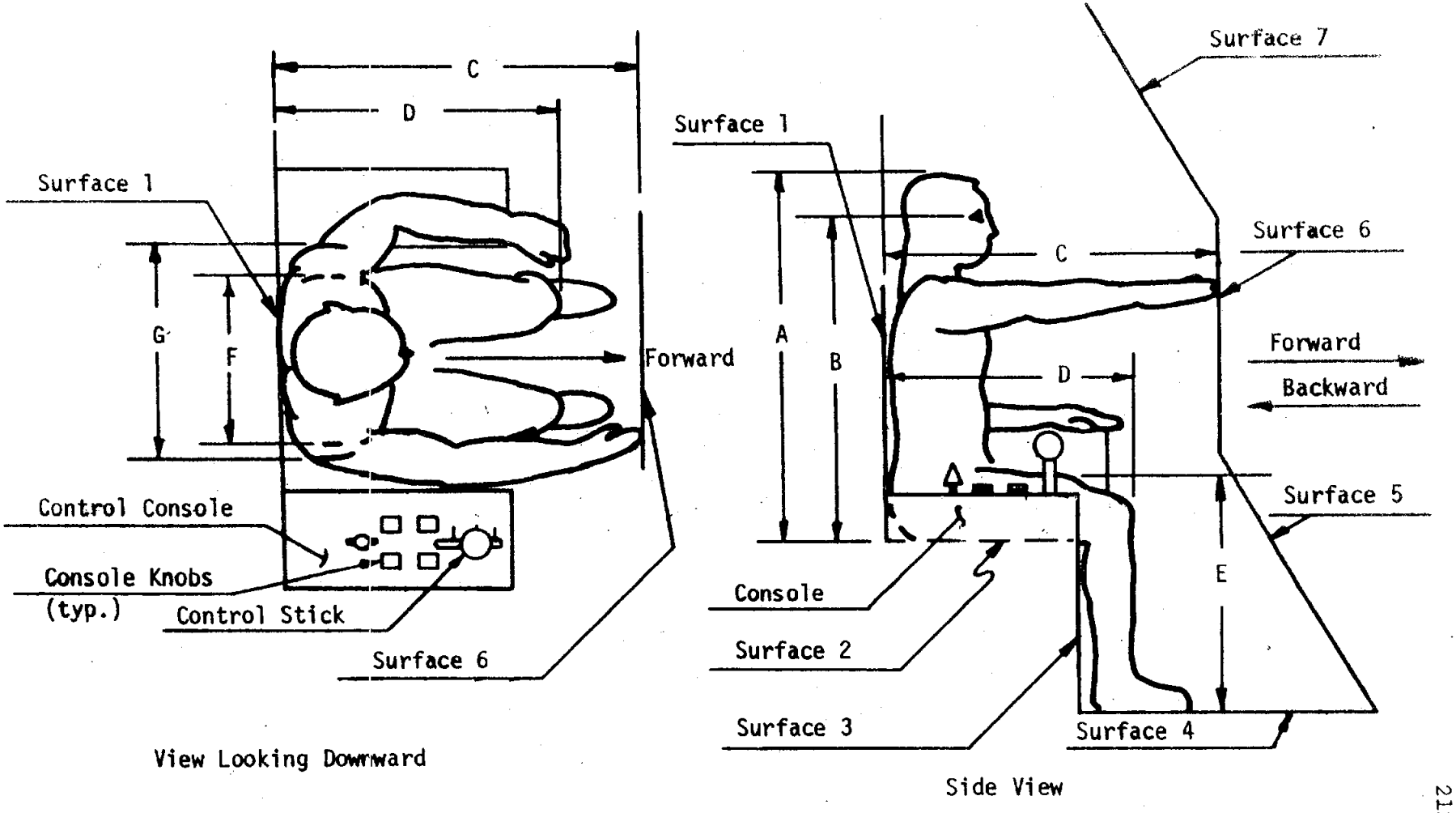

and C equal to the 95th percentile; and F and G equal to the 95th percentile and C equal to 95th percentile. Access to console knobs and lever, control stick, and areas on surfaces 6 and 7 would vary greatly. Such capabilities are even further complicated when one considers the range in dimensions of the arm segments from the shoulder to the elbow, and from elbow to the fingertips. Thus, the combination of varying body lengths, widths, breadths, etc., is a complex matter meriting consideration.

5. Care is needed in working the anthropometric criteria and in selecting percentile ranges. These criteria should be a "guide," with flexibility to exceed limits where it can be readily accommodated, or is justified by circumstances.

The original NASA anthropometric criteria for the eight body dimensions (as per the 1950 Air Force data) state that the CSM shall accommodate between the 10th and 90th percentiles. However, when comparing these criteria with actual dimensions taken from the astronauts, six of the eight dimensions are the 10th and 90th percentiles. Table 7 summarizes these data, gives equivalent astronaut "high" and "low" percentiles per Air Force criteria, and indicates the amount one limit was exceeded in pounds or inches. However, it is not known how many of these astronauts were beyond the specified ranges. This information is, of course, important in assessing the "degree" of incompatibility with the basic criteria.

Table 7

AIR FORCE DATA AND ASTRONAUT ANTHROPOMETRIC MEASUREMENT COMPARISON

No.	Dimension[1]	Anthropometric Data Values per Air Force Data[1]					Astronaut Data[2, 3]				Equivalent % (Approximate) Per Air Force Data[1]		RESULT
		5%	10% *	90% *	95%	Mean	No. of Observations	Measurement Range Low	High	Mean	Low	High	
1	Weight, lbs.	132.5	138.3	192.6	200.8	163.66	31	140.00	199.00	163.94	12.0%	94.0%	
2	Standing height, inches	65.2	66.0	72.2	73.1	69.11	36	66.42	72.21	69.71	13.5%	90.0%+	
3	Sitting height - erect, inches	33.8	34.3	37.6	38.0	35.94	28	34.53	38.54	36.38	13.8%	97.8%	.94" > 90%
4	Buttock-to-knee length, inches	21.9	22.3	25.0	25.4	23.62	23	22.64	24.92	23.78	15.0%	88.6%	
5	Knee height (sitting), inches	20.1	20.4	23.0	23.3	21.67	21	20.39	22.83	21.87	10.0%-	87.0%	
6	Hip breadth (sitting), inches	12.7	12.9	15.1	15.4	13.97	27	13.39	15.71	14.35	25.0%	97.0%	.60" > 90%
7	Shoulder breadth (Bideltoid), inches	16.5	16.8	19.1	19.4	17.88	28	14.09	20.75	18.72	<1.0%	>99.0%	1.65" > 90%, 2.71" < 10%
8	Arm Reach from wall, inches	31.9	32.5	36.7	37.3	34.59	9	32.20	36.50	33.60	7.5%	87.5%	

* NASA Specified Limits. Range to be accomodated to lie within 10% to 90% dimensions

SOURCES:

1. H.T.E. Hertzberg, G.S. Daniels, Aero Medical Laboratory and E. Churchill, Anthropometry of Flying Personnel-1950 (Wright Air Development Center, Wright-Patterson AF Base, Ohio, September 1954), WADC Technical Report 52-321

2. Dimensions 1 through 7 only: E. M. Roth, ed. Compendium of Human Responses to the Aerospace Environment (Washington, D.C.: National Aeronautics and Space Administration, NASA CR-1205, III, November 1968), pp. 16-7 through 16-15, using data by W.E. Fedderson, J. Reed, National Aeronautics and Space Administration, Manned Spacecraft Center, Houston, Texas. Unpublished data, 1967.

3. Dimension 8 only: National Aeronautics and Space Administration, Manned Spacecraft Center, Houston, Texas. Unpublished data, December 1962.

It is known, however, from data previously taken on the 16 original astronauts in 1962, that ten of these astronauts were out of the 10th to 90th percentiles for at least one of the eight defined dimensions. Eight of the 16 astronauts exceeded the 90th percentile for shoulder breadth (bideltoid), alone.[25] In comparing the astronaut and Air Force means on these eight dimensions, the astronaut mean value generally exceeds that of the Air Force population. It is obvious that the specified range on these dimensions is restrictive and needs expansion.

In assessing those NASA criteria, which establish body dimensions between 5th and 95th percentile as per Air Force data, similar inconsistencies are found. For the following critical dimensions, astronaut measurements exceed the 95th percentile dimension limit: thigh clearance (sitting); popliteal height (sitting); elbow-elbow breadth; hip breadth (standing); chest breadth; chest depth; and waist depth. The number of astronauts exceeding limits is not known.

Recent Air Force data indicate that the general trend in anthropometric dimensions, based on a 1967 survey of Air Force officer flying personnel, is for dimensions to

---

[25] Measurements taken December 7, 1962, op. cit.

increase, as might be expected from point 2.[26] A full assessment of these data should be made to verify whether the 1967 Air Force population is representative of the astronaut population. It may prove to be with specific limitations.

The generally accepted range of design percentiles is the 5th through 95th percentiles, or to accommodate 90 percent for given dimensions.[27] The Air Force's Crew Stations and Passenger Accommodations Handbook recommends that more than 90 percent of the flying personnel be accommodated, whenever possible.[28] Morgan et al., recommend accommodation of at least 90 percent, and that designers strive for 98 percent, if possible.

These authors also state that percentiles serve the following purposes: (1) they afford a basis for estimating the proportion of a group accommodated or inconvenienced by any specific design; (2) they permit selection and accurate

---

[26] Personnel Subsystems Handbook, op. cit., Subnote 3.1(1), Chapter 2, Section 2B, pp. 1-7.

[27] Military Specification, MIL-STD-1472, "Human Engineering Requirements for Military Systems, Equipment and Facilities," March 29, 1968, p. 74; Ernest J. McCormick, Human Factors Engineering, op. cit., p. 390; Wesley E. Woodson and Donald W. Conover, Human Engineering Guide for Equipment Designers, op. cit., pp. 5-15; E. Bennett, et al., Human Factors in Technology, op. cit., p. 250; and Personnel Subsystems Handbook, op. cit., p. 1.

[28] Crew Stations and Passengers Accommodations Handbook, AFSC DH-2-2 (Rev. ed.; Ohio: Air Force Systems Command, Wright-Patterson AFB, May 1, 1971), Chapter 2, Section 2A, p. 1.

use of test subjects; and (3) they aid in selection of equipment users or operators.[29] These purposes are generally correct for our applications, although the first perhaps requires more study because of the issues discussed; namely, the basis for estimating the proportion of a group accommodated or inconvenienced when considering percentiles being only applicable to the specific dimension under question.

For example, assume the standard range of 5th and 95th percentile is our criterion. If we use this criterion for height we accommodate 90 percent of the population. If we use it for shoulder breadth, we also accommodate 90 percent. The key question should not be how much of the population is being accommodated by these two dimensions, but how many individuals are accommodated out of the population, considering both dimensions. In the larger sense, with these criteria, it is important to know how many individuals are not accommodated and by what specific dimensions. This is particularly critical for crew station design purposes, especially because of the limited crewmen who fly or have to be accommodated (future crews or backup crews). Theoretically, the S/C should be able to accommodate all astronauts, or 100 percent of the user population.

---

[29] Morgan, et al., op. cit., p. 492.

Fortunately, not all dimensions taken, such as the 1950 Air Force survey, are critical to crew station design. While certain dimensions may be critical to a couch design, for example, others may be critical to design of a lightweight headset or oxygen face mask (emphasis on gross body dimensions as opposed to head dimensions). The couch, headset, or face-mask designer, who is looking for critical dimensions for a design, should comprehend the variability of body dimensions and capacities, and should have access to pertinent anthropometric criteria.

In some cases, the physical difference between a hardware item accommodating the full range and 90 or 98 percent of the range is slight, and the design may readily accommodate the full range without much difficulty or compromises in weight, complexity, and so forth. In certain situations, special hardware tailoring to accommodate a "freak" dimension may be advantageous, especially if this dimension is considerably lower than the 1st or 5th percentile value or higher than the 95th or 99th percentile. Plotting the critical anthropometric data, in the form of "adjustability curves" as shown in Figure 32, is a good way to understand the adjustability (in inches) required to accommodate various percentiles. These curves allow assessment of the accommodation reached by various percentile ranges. <u>If we can reasonably define the astronaut population, or population criteria, then accommodating the full population is certainly recommended.</u> <u>Exceptions can be made where such compliance is unduly compromising</u> to the design,

Figure 32 PERCENTILE CURVE FOR SITTING HEIGHT (A USAF FLYING PERSONNEL POPULATION SHOWING ADJUSTABILITY REQUIREMENTS FOR PERCENTILES OR PERCENTILE RANGES)

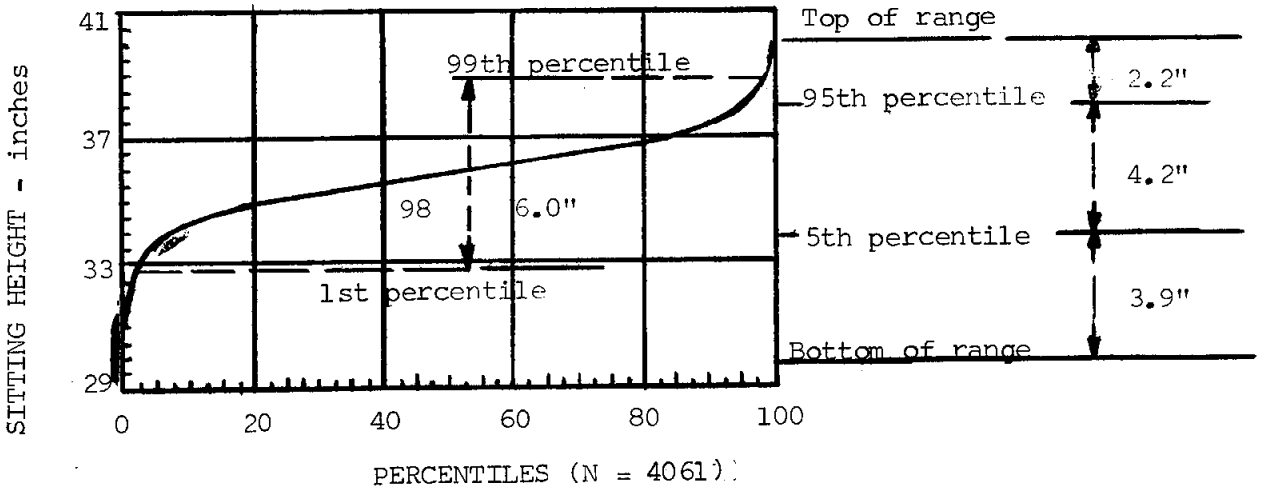

Source: Paul Webb (ed.), Bioastronautics Data Book, NASA SP-3006 (Washington, D. C.: NASA Scientific and Technical Information Division, 1964), p. 242. Adapted from H. T. E. Hertzberg, "Some Contributions of Applied Physical Anthropology to Human Engineering," WADD TR 60-19 (Ohio: Wright Air Development Center, Wright-Patterson AFB, September, 1954).

function or use of the hardware or systems. Freak dimensions may fall in such a category; however, such exceptions should be individually reviewed.

A conservative estimate for apparel may increase the capacity to accommodate a wider dimensional range. If, however, the item designed is basically compromised by providing adjustment for the full range of dimensions, then the number of crewman inconvenienced and its severity must be estimated: from awkward or annoying, to intolerable.[30] There may be alternative solutions which should be reviewed. Factors such as the frequency of use, the criticalness of the hardware whose use is impaired, and the effects on system or subsystems operations should be considered. Special tailoring, as noted above, may be an acceptable alternative.

6. Since, the body criteria refer to nude dimensions, consideration for wearing apparel and space suits has to be included. Further, determination of the effects of hardware attached or strapped to crewmen in working positions should be made.

These considerations, especially if suits are used, may require dimensions far exceeding the nude criteria and affect specific design details. When space suits are used be careful not to assume that suited dimensions, motion capabilities, and visibility are in anyway related to normal body anthropometric measurements or capabilities.[31]

---

[30] Morgan, et al., ibid., p. 499.

[31] Suited dimensions and use will be discussed later.

7. Dynamic as well as static dimensions should be considered.

So far, we have discussed only static body dimensions. Dynamic measurements are those with the body in various working positions: kneeling, crawling, prone position, functional arm reach (including range of reach capability in various limb positions), overhead reach, and others.[32] Forces that the body can apply in various positions are also included in this category. In this application, no correlation should be assumed between suited and normal body dimensions or capabilities.

8. Check the body dimension data used.

A wide variety of measurements exist reflecting the different needs of the anthropometrists, human factors personnel, and various designers (aircraft, spacecraft, automobile, space suits, architectural, etc.). Subtle differences in what appear to be similar dimensions may go unnoticed. Dimensions of the same body taken by different personnel may vary considerably. Well-trained personnel, using established and documented measurement techniques should make all anthropometric measurements. In the past, astronauts have endured a multitude of designers each seeking anthropometric data for his own use.

---

[32] Morgan, op. cit., pp. 543-50.

Furthermore, years of experience in S/C development have brought the need for an increasing number of different measurements. A compiled definition of body dimension criteria is needed which will satisfy the basic needs of various designers in the program. If these anthropometric design criteria are to be related to the Air Force, or other established agencies doing anthropometric surveys, there should be agreement on the dimensions to be taken, the method of definition, and provisions for structuring surveys to incorporate such measurements.

Measurements of the astronauts should be documented with anthropometric criteria in a formal document and periodically updated. Such rigor may ensure that design personnel are supplied with improved criteria and data, and would minimize astronaut time now spent on measurements.

9. Use three dimensional mockups to verify accessibility of controls, displays, and other hardware. Use subjects representative of the variety of dimensions of the user population. Use small and large subjects and people with various body and limb sizes. Have them wear apparel and suits representative of nominal and emergency conditions. Verify the capability to reach, see, or operate all controls and displays and other

hardware, as required, during such nominal and emergency conditions.[33]

Examples of Problems

The following are examples of anthropometric problems encountered during the Apollo Program which led to the guidelines outlined above.

1. The normal Apollo space suit helmet would not accommodate Astronaut Frank Borman because of his relatively large head; special, enlarged helmet was made for him.
2. Some astronauts could not fit their hand comfortably through the Apollo suit wrist disconnects, causing a modification for a larger size ring.
3. There was a hammock which served in the LM as rest/sleep for the Commander on Apollo 12 and subsequent missions. Its length was satisfactory for Apollo 12 and 14 Astronauts Conrad and Shepard, but was too short for the Apollo 13 Commander, Astronaut Lovell, whose height is about 70.8 inches. The flight hammock was modified at KSC for LM-7 (LM for the Apollo 13 mission) to accommodate this larger crewman.[34]

---

[33]The references used in this portion of the thesis should be read by those in spacecraft design. Until the NASA anthropometric data can be updated and compiled, judicious use of these references is recommended, heeding the cautions already mentioned. The following are highly recommended for designing adjustability and the functional use of dimensional criteria for design decisions. Morgan, et al., Ibid., Chap. 11, pp. 485-570. Richard G. Domey and Rosse A. McFarland, "The Operator and Vehicle Design," in E. Bennett, et al., Human Factors in Technology, op. cit., Chap. 14, pp. 247-67; and H. T. E. Hertzberg, "Dynamic Anthropometry of Working Positions," in Human Factors. 2, 4 (August, 1960) 147-55.

[34]Configuration Control Board Meeting CCBD Number OL0054A, "Commander's Hammock Modification" (Houston, Texas: NASA-MSC, January 1, 1970).

4. There were problems with the couch design on Apollo 8 and subsequent missions: a number of astronauts had difficulty reaching the translational handcontroller during launch conditions. Figure 9, page 22, shows the subject controller as item 4. The basic problem was the controller support did not shorten enough to allow adequate room to grip the controller.

An investigation revealed that the armrest was designed to accommodate the 5th to 95th percentile in the "forearm grip length." Since this dimension was not specifically taken or documented in the 1950 Air Force survey, the data were interpolated from related data in that report. This brought a 5th and 95th percentile values of 13.4 and 15.4 inches, respectively. At least five astronauts had dimensions equal to or less than this 13.4 inch length. With a suit on during normal launch conditions, the additional thickness under the elbow precluded use of the controller by crewmen measuring 13.4 inches (at 5 percent).

Fortunately, the couch armrest adjustment was provided by a keyway slot in the armrest extension, which was easily modified by extending the slot an additional .75 inch. This allowed the armrest to be shortened to a forearm grip length less than the interpolated zero percentile value.

This example illustrates a number of problems related to the nine points discussed above. For example, one point emphasized was that subtle differences may exist in what appear to be similar dimensions. Some dimensional data related to this illustration were taken in 1962 by Air Force anthropometrists

and NASA representatives. The figure used to illustrate what the dimensions were showed the same "forearm grip length" discussed above as dimension "D" in Figure 33(a). Military Specification, MIL-STD-1472 and the Air Force's Personnel Subsystems Handbook, both use an "elbow-grip length" as defined by dimension "V", Figure 33(b). Note the subtle difference where the dimension begins near the elbow.

Figure 33. ARM DIMENSIONS

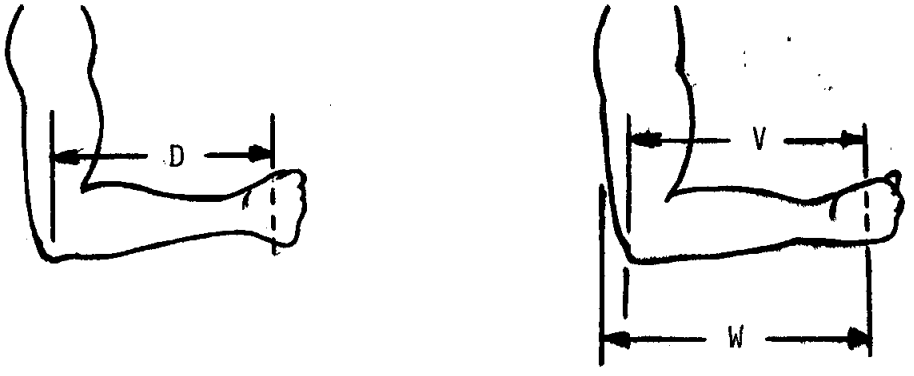

(a) Forearm grip length Source: Unpublished data of measurements, op. cit.

(b) Elbow-grip length (V) and undesignated dimension (W). Source: Military Specification, MIL-STD-1472, op. cit., pp. 76 and Personnel Systems Handbook, op. cit., p. 2.

To add another confusing factor in anthropometric semantics, the NASA astronaut data cited in Table 7 uses "length of the forearm to grip".[35] No sketch is available to compare this undoubtedly similar dimension with those in Figure 33(a) and (b). In addition, consider this dimension to be closer to that denoted by "W", since it is more representative of the actual distance between the hand grip and the back of the elbow area

[35] E. M. Roth (ed.), op. cit., pp. 16-12.

or upper arm, as the arm rests on a flat surface. In view of the confusion about such a dimension, it is best to leave this undefined.

5. A cabin dump valve located to the left of the commander on a side panel was supposedly reachable during early design phases of the CM. However, during the S/C 101 Crew Compartment Stowage Review, December 4-8, 1967, the commander could not reach this valve when in the suit, in a ventilated mode, and restrained in the couch by the harness (launch type condition). Photo 18 shows a suited crewman reaching as far as possible toward the valve. Because of this incompatibility, a dog-leg extension knob was added to the old valve knob shown in Photo 19. This extension allowed the suited crewman to reach and operate the valve.

What was acceptable in shirtsleeves, proved unacceptable in the latest configuration space suit. This problem might have surfaced earlier if the contractor had flight representative suits during the S/C's development. Unfortunately, the suits used for Apollo were being developed during this time, and the flight configuration was not available until late in S/C development.

Photo 18. Suited Crewman (Pressurized) Reaching for CM Cabin Repressurization Knob

Photo 19. CM Cabin Repressurization Control

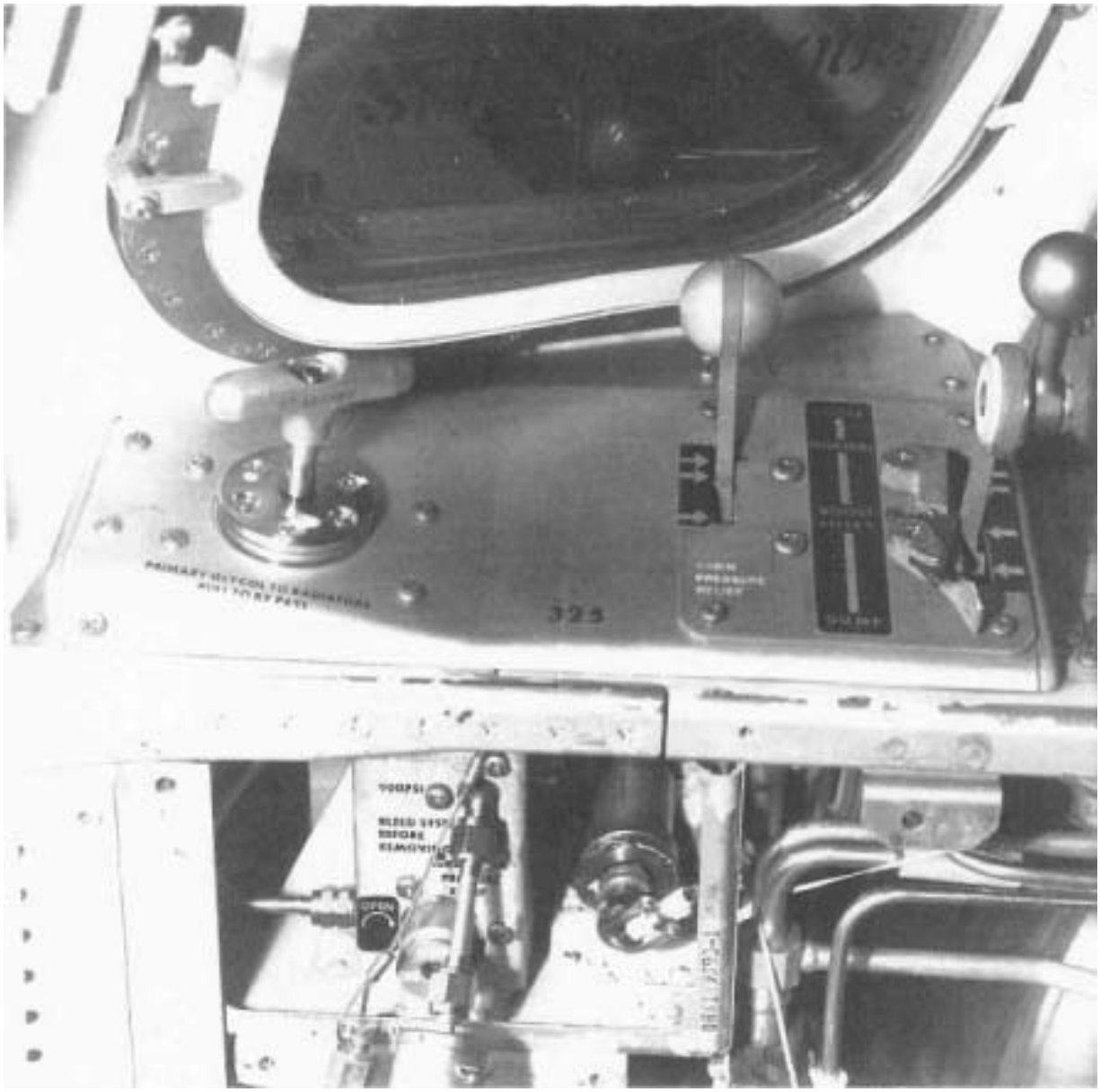

6. Anthropometric problems in S/C design started earlier than the Apollo Program, as indicated in the following excerpt from a Project Gemini Report:

> Gemini originally was designed to accommodate a 75 percentile man in the sitting position. It was then learned that some second generation astronauts, although six ft. or under, were greater than 75 percentile in sitting height. In addition, some of these individuals grew up to two in. when torso length was measured lying on their backs, simulating a weightless condition. For this reason it was determined that more height in the crew area was required. However, since external geometry as well as seat configuration was fixed, the obvious solution was outruled. The egress kit containing oxygen was cut 1.75 in. by making the part a machining rather than containing bottles. In addition the hatch was internally 'bumped' in the region of the helmet area to give the astronauts additional room above their heads. An additional .75 in. was gained in this manner and proved to be a great aid for ingress from EVA.[36]

This information reveals several factors:

(a) The dimension of a 75th percentile man in the sitting position is 36.8 in. according to the 1950 Air Force data. Of the original 16 astronauts, four exceeded this dimension and one matched it. Thus, the original design appears to have ignored four to five of the sixteen astronauts--quite a number. The addition of .75 in. to the 36.8 in. value for the 75th percentile gives a total sitting height of 37.55, which is equivalent to a 90th percentile sitting height. These

---

[36] P. W. Malik and G. A. Souris, Project Gemini, A Technical Summary, NASA CR 1106, Contract NAS 9-170, (Houston, Texas: NASA, June 1968), p. 173.

percentiles are much less than those recommended and discussed already.

(b) The criteria stated do not account for the additional height required due to suited conditions, although it is possible the meaning of a 75 percentile man as stated, is a suited, 75th percentile suited crewman. A pressurized suit, as required during an EVA, will add appreciably to the effective sitting height dimension, creating even more of a dimensional problem. The criteria used therefore require clarification.

(c) It is obvious that the measurement of sitting height, while sitting erect was not applicable to the S/C configuration which was designed for prelaunch, launch, entry and impact with the g-force vector in a transverse direction. The basic nude and suited dimensions should have been taken with the use orientation of the crewmen lying on their backs. Since the restraint harness may have held the crewmen tightly in their seats during these conditions, it is entirely possible that an unrestrained suited crewman under zero gravity conditions could have a larger dimension than the normal restrained sitting crewman. In addition, I suspect that a sitting up crewman in a pressurized suit at one-gravity conditions may help hold down the sitting height dimension due to his own weight holding, in effect, the suit down. It is probably

the combination of these two effects plus perhaps additional suit ballooning in the buttocks area which created such a large dimensional difference between the two positions. In such cases, dimensions should have been taken initially in both positions to ensure S/C compatability.

The anthropometric measurements now taken should include dimensions for reclining personnel since these body dimensions will normally differ from values taken in an upright position. If suits are also used in these positions, then measurements taken should also include suited measurements.

Clothing Effects on Size

Most of the previously cited literature and other information adequately cover this aspect of anthropometric design.

Suit and Suited Capabilities

As noted, it is important not to assume that suited dimensions, motion capabilities, and visibility are in any way correlated to normal nude body measurements. Suited dimensions mobility and visibility are dependent on the following factors:

1. Type and design of suit.

The Apollo spacesuit comes in intravehicular and extravehicular configurations. Fittings on these suits are different in location and amount. Also, the extravehicular garment has a number of extra bulky layers of insulation and other materials

required for lunar surface operations. The suits used for the Mercury and Gemini Programs were substantially different than the Apollo suit in components, basic design features, and capabilities. Suit configuration within these programs and for Apollo frequently varied to incorporate provisions required by different mission requirements, necessary changes, and improvements developed to enhance suited crewmen capability.

The physical construction and configuration of the suit may vary considerably depending on the type suit and mission to be performed. The Apollo, for example, has bearings in some joint areas, special cabling in the shoulder, hand, and crotch areas, and is generally tailored to fit the astronauts. Others, such as the Air Force's A/P22S-2 full-pressure suit, have entirely different construction--fittings attached to the suit, mobility joints, physical dimensions, and mobility/visibility capabilities. These suits are for the Air Force flight population, and come in eight standard sizes. Suits can be designed for both seated or upright positions. Designs for both positions tend to compromise the capabilities of each.

2. Suit use modes (pressurization)

If a suit is worn in a "vented" condition (negligible pressure difference between inside and outside of the suit), with the suit providing body cooling and oxygen for breathing (if the helmet is on or the visor is closed), then the suit dimensions are entirely different than when a slight to 3.7 or

5.0 psig pressure differential exists. The suit size and its mobility and capability vary with pressure. This size change with pressure varies for different suits. The volume used by a crewman in an unpressurized, and especially a pressurized suit, is substantially more than that of a nude or normally cloth individual. Photos 20, 21 and 22 illustrate the room taken by the Apollo suit. Fixed hard points, such as helmet rings, wrist disconnects, joint bearings etc., vary a negligible amount with increase in internal suit pressure. The angle of the helmet ring, relative to the suit, and the positions of joint bearings and wrist disconnects, may vary significantly.

Without exception, a suit used in a vented condition is smaller and easier to move in and about than when it is pressurized to 3.7 to 5.0 psig. Generally, all "soft" suit sections tend to become rounded when pressurized. Arm sections and other sections may extend in length when pressurized. Some joints elongate more circumferentially and longitudinally than others.

3. Suit mobility

The amount of mobility offered by the vented, slightly pressurized and fully pressurized suit varies considerably. In some suits, a slight internal pressure will make some joint movements easier than when the suit is not pressurized. A good deal of space suit development effort centered on

Photo 20. Suited CM Crewmen in Launch Position (Ventilated suit Pressure)

Photo 21. Suited CM Crewmen in Launch Position (Sui Pressure 3.7 PSIG)

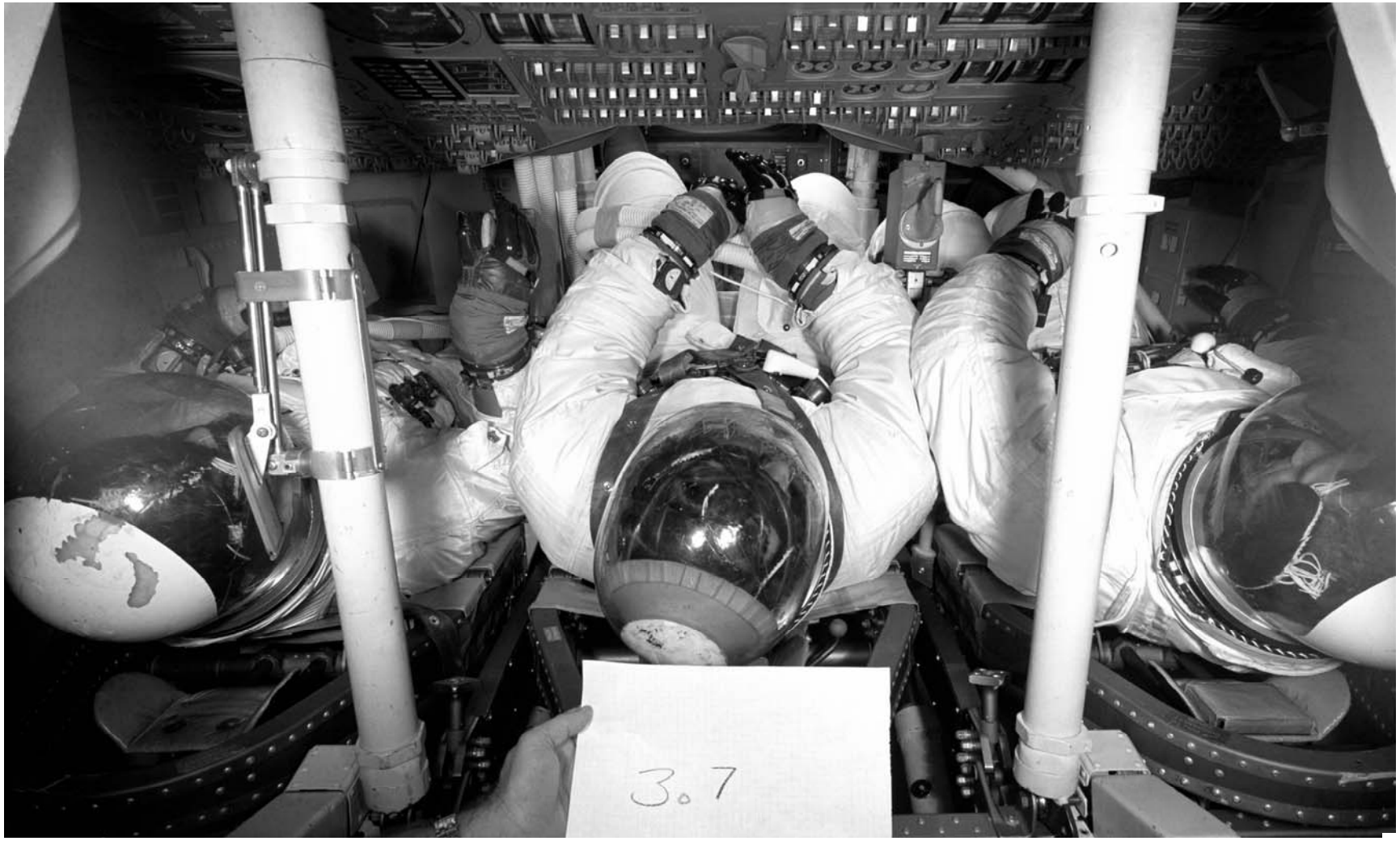

Photo 22. Suited CM Crewman in Lower Equipment Bay, View Between Couch Foot Struts

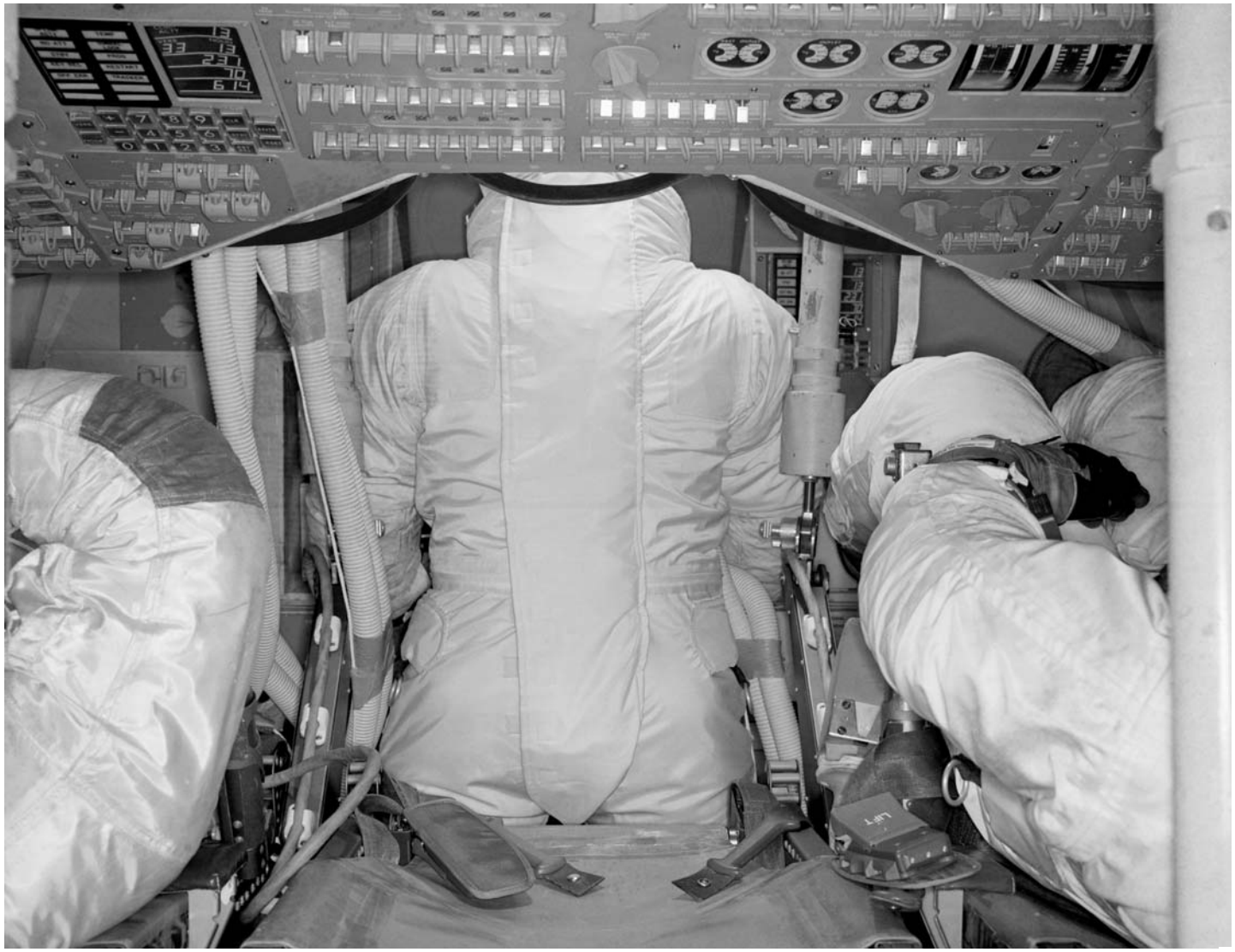

design of improved joints for the various moving body joints. Some joints, when pressurized, exhibit a natural neutral position which they will tend to return to. Others tend to remain in the position to which they are set, except when near the full range of joint movement.

The man in a pressurized suit has to exert forces on the suit depending on the joint's design, and bend of the suit joint. When the joints are bent to their fullest, the material in the joint area may bunch up and limit the joint's bending range. The mobility of a suit joint and its range of motion depend on it's basic design. Some motions in one plane may be substantially easier and different in range than those applied in another. Some joints are easier to bend at earth gravity because the crewman's weight aids in bending.

4. Suited position and man's location in the suit

The size of certain suit parts vary when the crewman is seated or standing. The crewman's position within the garment will usually vary considerably between these two positions. Movement of the joints will normally produce a size variation in some related parts of the suit. A tightly "cinched-up" harness over the suit, particularly one tightened before pressurized, will ease some of the load induced by the internal pressure and may affect the suit shape and its "ballooning."

At one g or greater, the man will sink into the suit in the downward g-force direction. In zero gravity, the crewman

in a pressurized suit may be able to take advantage of this condition to maintain a fixed position within the now enlarged suit. He may be able (if the fit is not too tight in some areas) to move his body somewhat within the pressurized vessel. He may also be able to do this at one-gravity conditions, but to a lesser extent.

Suited Dimensions

Unfortunately, there is little published information on the size and mobility capabilities of the latest ventilated and pressurized Apollo space suits. Figure 34 summarizes the general dimensions of a pressurized extravehicular-type Apollo suit sized to fit a 5 1/2-foot crewman. The approximate dimensions of large size EVA type glove (in inches) pressurized to 3.75 psi is provided below:[37]

EVA GLOVES (95 percentile)

Circumference	11.2
Finger diameter	1.0 ea.
Width-- including thumb	4.5
Width-- fingers only	4.2
Finger length	3.25
Depth through palm	2.0
Wrist disconnect diameter	4.0
Length-- overall	17.0
Length-- to wrist disconnect	10.5

[37] North American Rockwell Letter 69MA10112; from E. E. Lane, Manager, Apollo CSM Associate Contractor Administration, Space Division, Downey, California to ITEK Corporation, Lexington, Mass., October 16, 1969, Figure 2 of which documents information verbally received for International Latex Corporation, March 7, 1969.

Figure 34 TYPICAL PGA DIMENSIONS (PRESSURIZED) FOR A 5 1/2-FOOT TALL CREWMAN

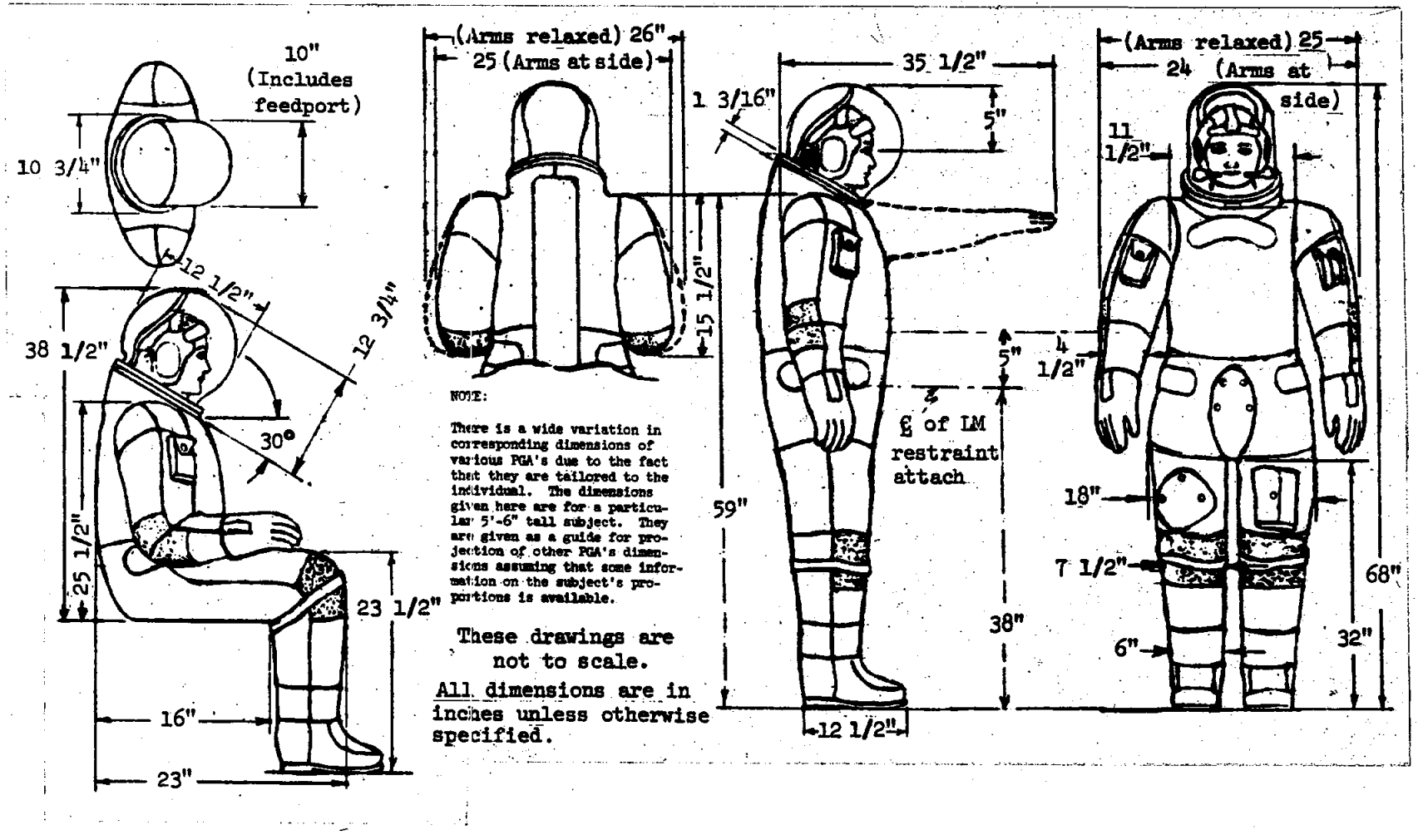

Source: CSM/LM OPERATION DATA BOOK, Vol. IV: EMA Data Book, SNA-8-D-027 (IV) (Revision 2; July 7, 1971), p. 2.2-2.

This information is but a portion of that needed by S/C designers. Since the Apollo suit is probably most representative of what will be worn in future missions, a complete anthropometric survey of various size Apollo suits should be made similar to that performed by the Air Force.[38] Intravehicular and extravehicular suit configurations, as well as kneeling, crawling, and other possible positions should be included in such a survey.

Suited Mobility Values

The most recent published data on Apollo suit mobility are from 1966.[39] Since then, the suit evolved to a flight configuration and several basic revisions to the suit have been made. The preliminary design goal information presented below constitutes an update of these 1966 data. These data too should be replaced with those of actual Apollo suits in a mobility survey such as that discussed for dimensional data.

Figures 35 through 37 provide terminology and definitions for the mobility performance data provided in Tables 8 through 11. Again, these data must be used with caution since they are "design goal" information, and not actual data.

---

[38] Milton Alexander, J. W. Garrett, and M. P. Flannery, Anthropometric Dimensions of Air Force Pressure-Suited Personnel for Workspace and Design Criteria (Ohio: Aerospace Medical Research Laboratory, Aerospace Medical Division, Air Force Systems Command, Wright-Patterson AFB, August, 1969), report AMRL-TR-69-6.

[39] Roth, op. cit., Chapter 16.

Figure 35 TERMINOLOGY AND DEFINITIONS FOR DESCRIBING THE MOBILITY OF THE PRESSURE GARMENT ASSEMBLY

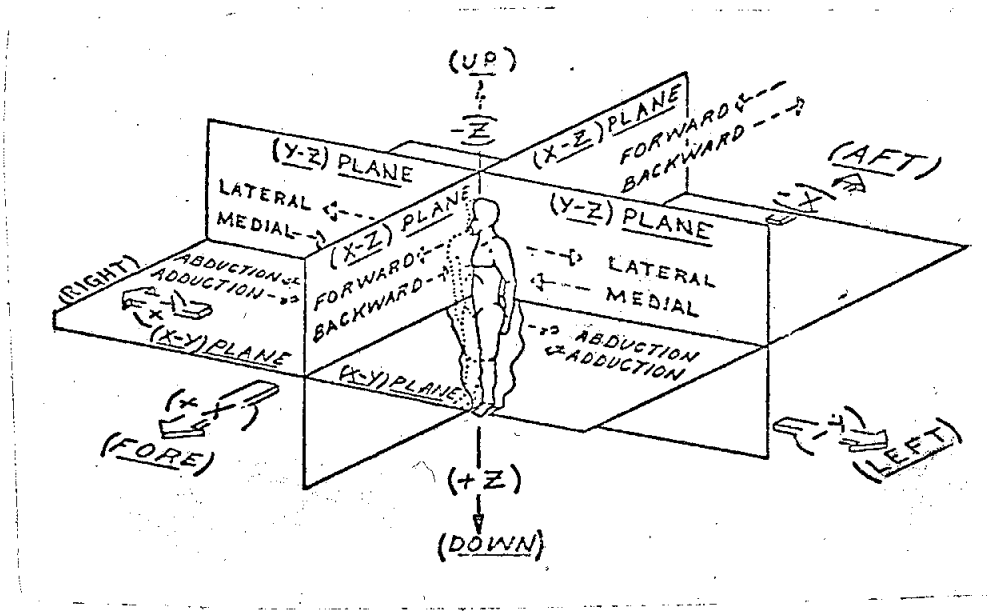

Plane Definitions:

a. (Y - Z Plane) - Frontal Plane

b. (X - Z Plane) - Sagittal Plane

c. (X - Y Plane) - Transverse Plane

Type of Limb Movement Terms:

a. Flexion - Bending or decreasing the angle between parts of the body.

b. Extension - Straightening or increasing the angle between parts of the body.

c. Stretch - Lengthening of body part.

d. Rotation - Revolution about the axis of a body part.

e. Pronation - face down.

f. Supination - On back or Face up.

Direction of Limb Movement Terms:

a. Forward = +X Direction

b. Backward = -X Direction

c. Upward = -Z Direction

d. Downward = +Z Direction

e. Right = +Y Direction

f. Left = -Y Direction

g. Lateral = Away from (X-Z) plane (in Y-Z plane)

h. Medial = Toward (X-Z) plane (in Y-Z plane)

i. Abduction = Away from (X-Z) plane (in X-Y plane)

j. Adduction = Toward (X-Z) plane (in X-Y plane)

Source: E. M. Roth (ed.), Compendium of Human Responses to the Aerospace Environment, op. cit., pp. 16-14, Figure 16-18; Adapted from: W. J. VanDyke, "Performance/Design and Product Configuration Requirements, Extravehicular Mobility Unit for Apollo Block II Missions, Master End Item Specification," NASA-EMU-CSD-A-096 (Houston, Texas: NASA-MSC, January, 1966).

Figure 36 ELEMENTARY BODY MOVEMENTS

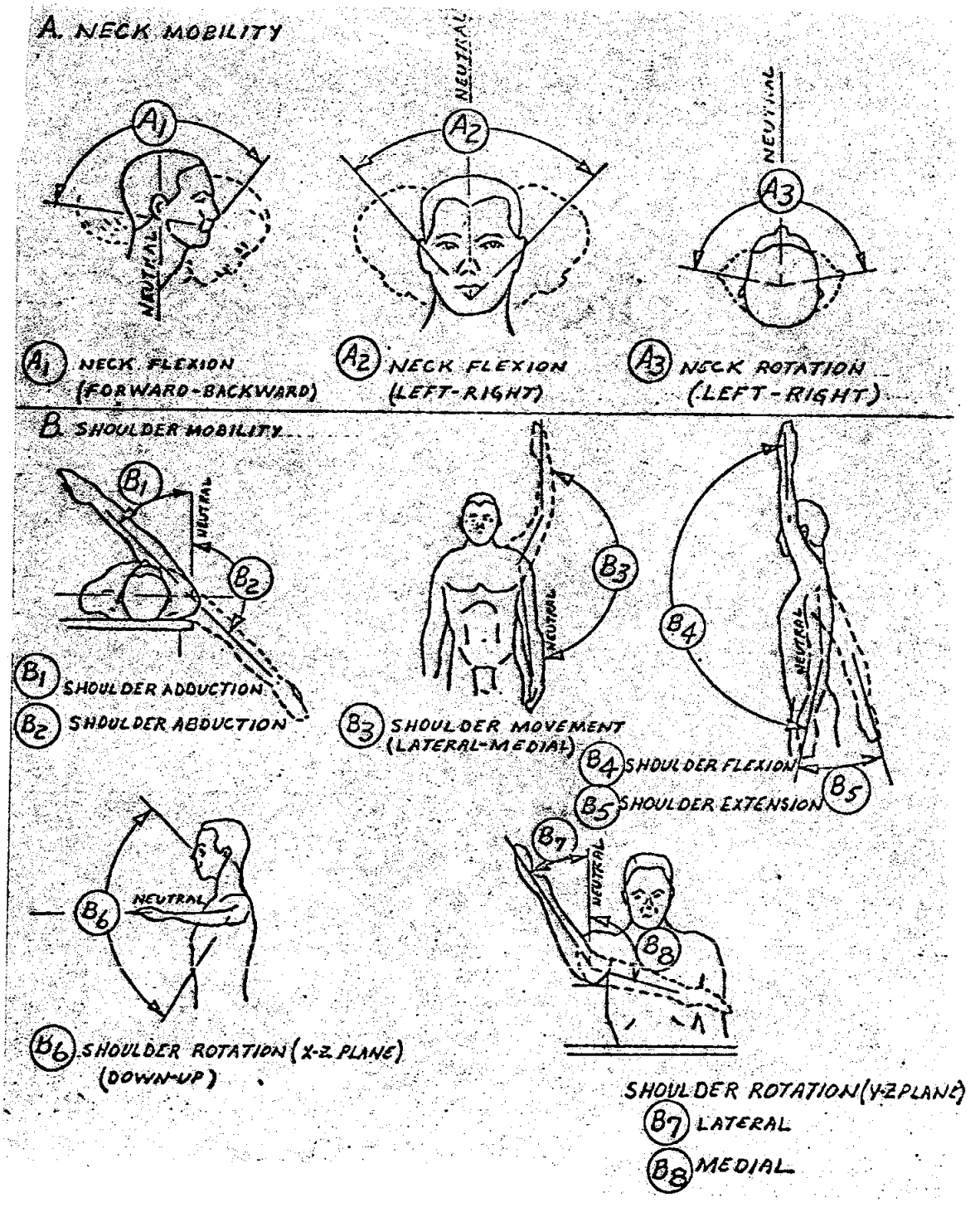

Source: "Performance and Interface Specification for LEM Excursion Module, Government Furnished Crew Equipment," LSP-340-8 (Bethpage, N. Y.: Grumman Aircraft Engineering, May 5, 1966), pp. 19-22.

Figure 36, continued - 2

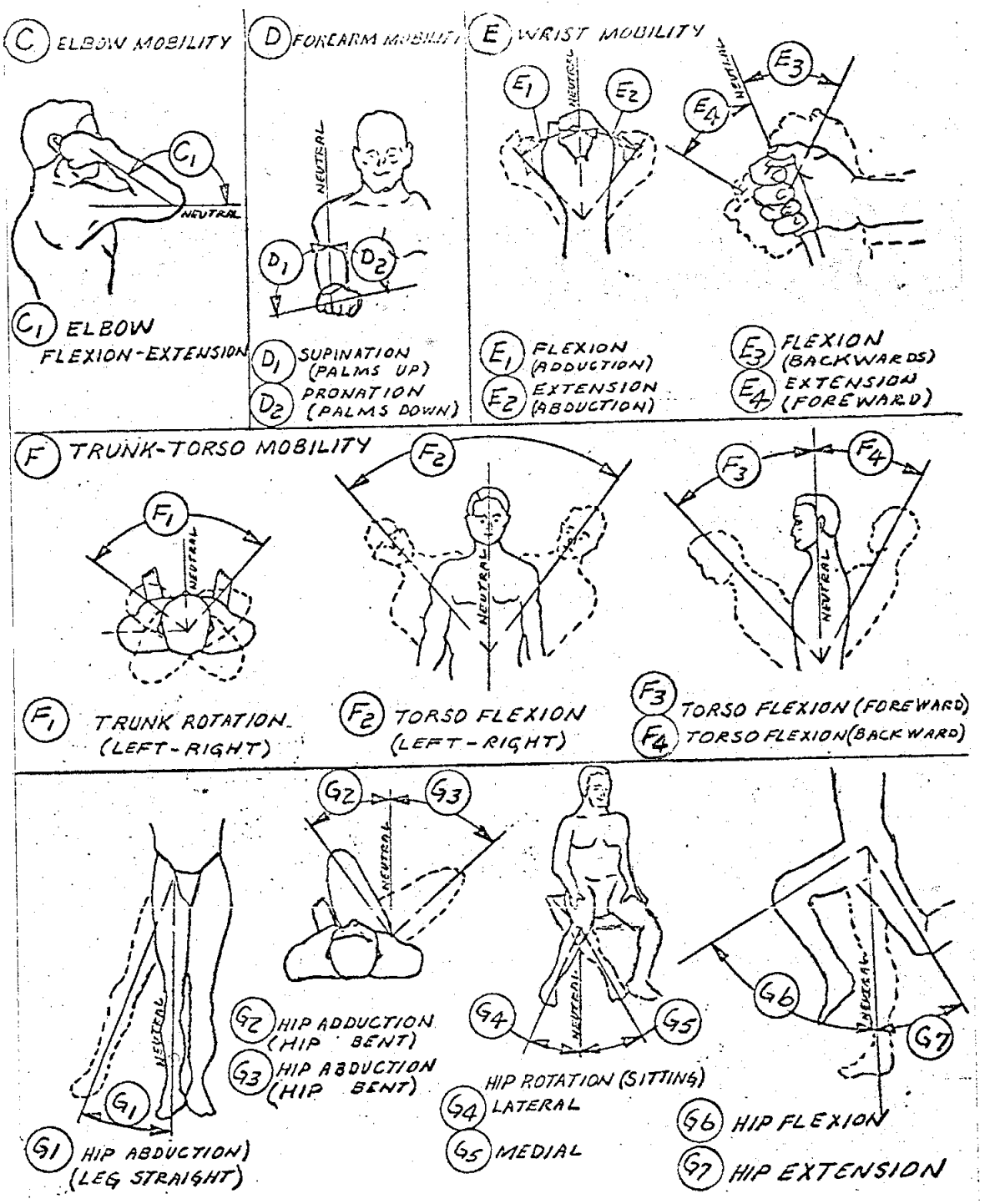

Figure 36, continued - 3

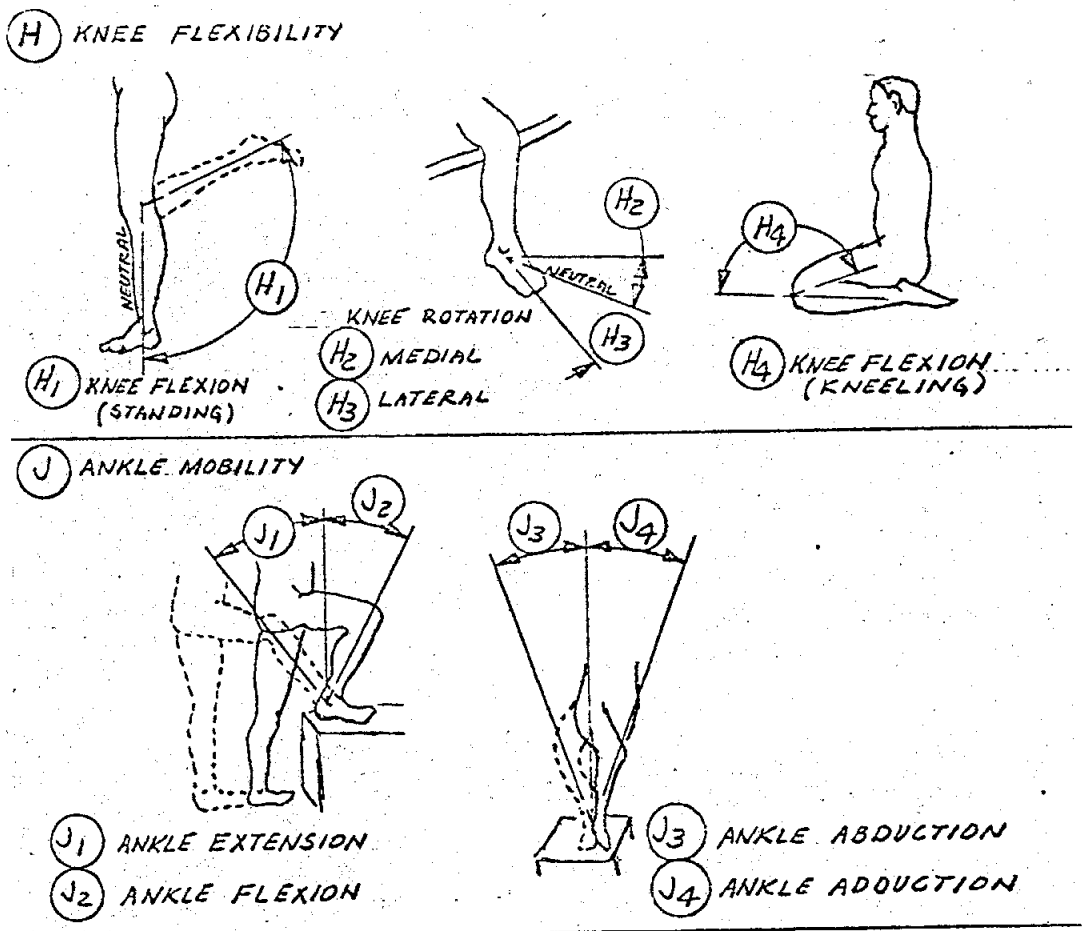

RELATED DEFINITIONS:

1. JOINT "NEUTRAL" POSITION - THE NATURAL OR CENTRAL POSITION OF A JOINT.

2. SUIT JOINT "EQUILIBRIUM" POSITION - THE SUIT JOINT POSITION TO WHICH THE SUIT WILL "SPRING TO" OR "SEEK" WHEN VENTILATED OR PRESSURIZED WHEN NO FORCE IS BEING EXERTED BY THE CREWMAN IN THE SUIT.

Figure 37 BASIC HAND-FINGER TASKS

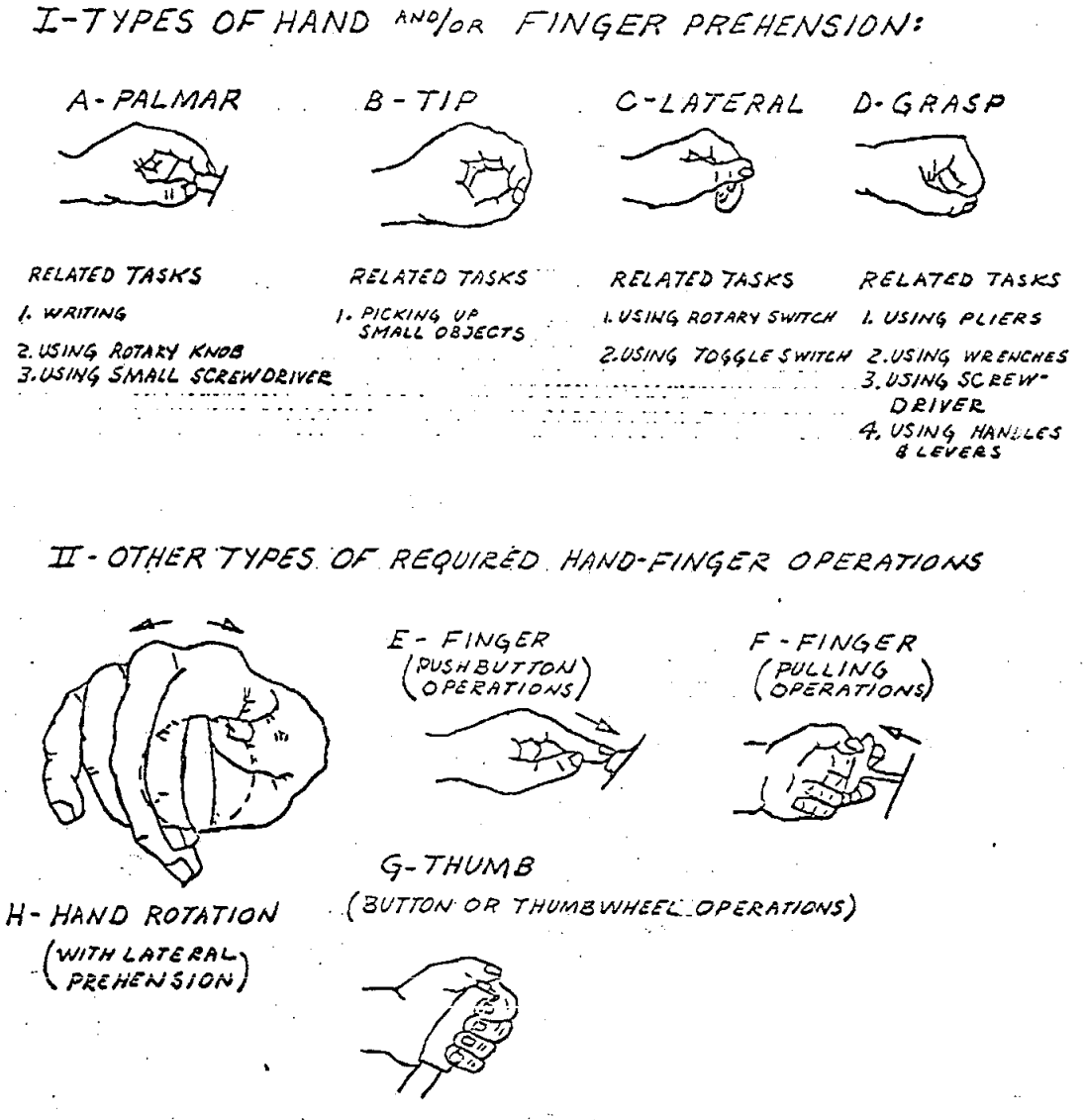

Source: "Performance and Interface Specification for LEM Excursion Module, Government Furnished Crew Equipment," LSP-340-8 (Bethpage, N. Y.: Grumman Aircraft Engineering, May 5, 1966), pp. 19-22.

Table 8

MAXIMUM PERFORMANCE REQUIREMENTS FOR THE ELEMENTARY BODY MOVEMENTS, INTRAVEHICULAR AND EXTRAVEHICULAR MODE, VENTED OR AT 3.75 ± 0.25 PSIG

MOVEMENTS	RANGE OF MOVEMENTS (Degrees)	MAXIMUM TORQUE GOALS (In-pounds)
a. Neck Mobility		
1. Flexion (forward-backward)	135	12
2. Flexion (left-right)	30	12
3. Rotation (left-right)	140	12
b. Shoulder Mobility		
1. Adduction	60	12
2. Abduction	95	12
3. Shoulder Movement Lateral-Medial	155	12
4. Flexion	150	12
5. Extension	35	12
6. Rotation (X-Z Plane) Down-up	140	12
Rotation (Y-Z Plane)		
7. Lateral Rotation	35	12
8. Medial Rotation	100	12
c. Elbow Mobility		
1. Flexion - Extension	115	12
d. Forearm Mobility		
1. Supination (Palms up)	145	2.5
2. Pronation (Palms down)	25	2.5
e. Wrist Mobility		
1. Extension (forward)	56	2.5
2. Flexion (backward)	57	2.5
3. Flexion (adduction)	42	2.5
4. Extension (abduction)	30	2.5

Source: "Contract End Item Detail Specification (Prime Equipment), Performance/Design and Product Configuration Requirements, CEI No. 3001B, Specification No. CP 3001, A7LB Pressure Garment Assembly with Integrated Thermal Meteroid Garment for Apollo Extravehicular Mobility Unit," NASA Contract NAS 9-6100 (Rev. A.; Dover, Del.: ILC Industries, Inc., Jan. 30, 1970), pp. I-49 thru I-54.

Table 8 continued--

MAXIMUM PERFORMANCE REQUIREMENTS FOR THE ELEMENTARY BODY MOVEMENTS

INTRAVEHICULAR AND EXTRAVEHICULAR MODE, VENTED OR AT 3.75 ± 0.25 PSIG

MOVEMENTS	RANGE OF MOVEMENTS (Degrees)	MAXIMUM TORQUE GOALS (in-pounds)
f. Trunk-Torso Mobility		
1. Trunk Rotation (left-right)	5	24
2. Torso Flexion (left-right)	35	24
3. Torso Flexion (forward)	130	24
4. Torso Flexion (backward)	25	24
g. Hip Mobility		
1. Abduction (leg straight)	20	24
2. Abduction (hip bent)	5	24
3. Abduction (hip bend)	15	24
4. Rotation (sitting): Lateral	30	24
5. Rotation (sitting): Medial	30	24
6. Flexion	90	24
7. Extension	20	24
h. Knee Mobility		
1. Flexion (standing)	110	12
2. Rotation (medial)	15	12
3. Rotation (lateral)	15	12
4. Flexion (kneeling)	140	12
j. Ankle Mobility		
1. Extension	45	36
2. Flexion	45	36
3. Abduction	25	36
4. Adduction	25	36

Table 9

PERFORMANCE REQUIREMENTS FOR COMPLEX BODY MOVEMENTS, INTRAVEHICULAR, FINGER, HAND, AND WRIST (CREW DUTY RELATED)

Movements or Operations		Performance Criteria	Intravehicular Wear Test Conditions 0.18 psig	3.5-4.0 psig
a. Palmar	1.	Write legibly with pencil	x	x
	2.	Operate .375" dia rotary knob	x	x
	3.	Utilize small screwdriver	x	x
b. Tip Prehension		Pick up small objects such as: Small Screws	x	x
c. Lateral Prehension		Operate 2 and 3 position spacecraft toggle switches:		
	1.	Vertically	x	x
	2.	Horizontally	x	x
d. Grasp	1.	Use a screwdriver	x	x
	2.	Use pliers	x	x
	3.	Use crescent wrench	x	x
	4.	Use socket wrench	x	x
	5.	Use hand-controller	x	x
e. Finger: Pushbutton Ops.		Operate Pushbutton within panel of pushbuttons	x	x
f. Finger: Pulling Ops	1.	Operate T-handle control	x	x
	2.	Operate D-handle control	x	x
	3.	Operate ring handle control	x	x
g. Thumb	1.	Operate thumbwheel	x	x
	2.	Operate button on control handle	x	x
h. Hand Rotation		Operate discrete position rotary switch	x	x
i. Wrist Movements	1.	Move wrist side to side while opening and closing fingers	x	x
	2.	Move wrist up and down while opening and closing fingers	x	x
j. Whole hand Movement		Hold hand at any desired position	x	x

* Intravehicular wear = CWG and PGA or LCG and PGA

x - Required

Table 10

PERFORMANCE REQUIREMENTS FOR COMPLEX BODY MOVEMENTS

INTRAVEHICULAR, FINGER, HAND AND ARM (PGA RELATED)

PERFORMANCE CRITERIA	INTRAVEHICULAR WEAR * TEST CONDITIONS 0.18 psig (suit ventilation only)			@ 3.5 to 4.0 psig		
	CM Couch Pos.	CM Vert. Pos.	LM Vert. Pos.	CM** Couch Pos.	CM Vert. Pos.	LM Vert. Pos.
Reach and satisfactorily operate the following:						
a. Helmet Ring Disconnect	x	x	x	N/A	N/A	N/A
b. EV Visor (Positioning)	N/A	N/A	x	N/A	N/A	x
c. EV Visor Attachment	N/A	N/A	x	N/A	N/A	x
d. Medical Injection Fitting	x	x	x	x	x	x
e. PLSS Controls and Attachments	N/A	N/A	x	N/A	N/A	x
f. OPS Controls	x	x	x	x	x	x
g. Gas Disconnects	x	x	x	x	x	x
h. WMS Disconnects	x	x	x	x	x	x
i. Multiple Water Disconnect	x	N/A	x	N/A	N/A	x
j. Electrical Disconnect	x	x	x	x	x	x

* Intravehicular Wear - CWG + PGA or LCG + PGA

** Provided there is no interference from the restraint harness.

Legend: X - Required

NOTE: The performance required in this table shall apply at pressures up to 4.0 psig.

Table 11

TOTAL BODY MOBILITY REQUIREMENTS

INTRAVEHICULAR AND EXTRAVEHICULAR

Performance Criteria	Extravehicular	Intravehicular
a. At 1/6 "g" pressurized to 3.75 ± 0.25 psig		
1. Climb ladder at slopes up to 27° with rungs spaced every 10 inches.	x	N/A
2. Remove equipment from LM with LM at 27° position.	x	x
3. Crouching in a deep knee bend for three minutes.	x	x
4. Kneeling on one knee for five minutes and working in kneeling position.	x	x
5. Crawling forward five feet, then backward to starting point.	x	x
6. Getting to, and up from, the supine and prone positions (unassisted) within 30 seconds.	x	x
7. Pickup and carry 2nd astronaut.	x	N/A
8. Walking erect on 3° inclined plane at 3 mph for 10 minutes; jumping over small crevices; taking long strides.	x	N/A
9. Bending over to reach and pick up small objects on ground without kneeling.	x	N/A
10. Operate PLSS and OPS controls.	x	x
11. Moving from standing erect to sitting position unassisted (suit adjustments are permissible).	x	x
12. Lift without squatting	x	x
13. Donning extravehicular wear while pressurized, with assistance as necessary. This equipment includes: (a) EV Gloves (b) PLSS (c) SLSS (d) Slip-on Lunar Boots (e) LEVA	N/A	x

Table 11 continued--

Performance Criteria	Extravehicular	Intravehicular
14. Reach forward while in kneeling position and torque at distance obtained.	x	x
15. Crawl face down through LM access hatch.	x	x
16. Bend down in LM and shut and lock LM hatch.	N/A	x
17. Operate overhead hatch	N/A	x
18. Change LiOH canisters.	N/A	x
19. Handle equipment in torso-bent position in restricted area.	N/A	x
b. At zero "g" pressurized to 3.75 ± 0.25 psig		
1. Operate EV transfer equipment	x	N/A
2. Handle equipment and carry out tunnel transfer	N/A	x
3. Handle OPS in CM.	N/A	x
4. Work at AOT in LM and G & N station in CM	N/A	x
5. Handle PLSS in LM.	N/A	x
6. Access to CM lower equipment bay and capability to handle equipment	N/A	x
7. Capability to carry out couch operations in CM.	N/A	x
8. Capability to carry out free space transfer.	x	N/A
9. Perform manual locomotion and body positioning using handrails.	x	N/A
10. Operate LEVA.	x	N/A
11. Open and close LM and CM hatches.	N/A	x

Examples of Problems

The following are examples of anthropometric problems encountered on suited dimensions and mobility during the Apollo Program:

1. In Figure 20, PGA-CM Foldable Couch Envelope ICD, notes numbers 6 and 8 provide for design to accommodate a 10th to 90th percentile crewman in the following areas: heel restraint interface (Section F-F); suit helmet headrest, (Section E-E); and in general couch PGA operations. References to such percentiles appear frequently in other design documents, but there are several drawbacks to these criteria:

   (a) There is not necessarily any relationship between suit size and body dimensions. In fact, the suit uses one or more standard sizes in as many hardware designs as possible. The helmet (with the exception of the large helmet for Frank Borman noted above), comes in one size to accommodate a wide variety of head dimensions. The helmet shape, size, and neck ring, and its suit counterpart, are fixed. The suit heel restraint is also fixed so all suit heels mate with the couch and are interchangeable. The couch restraint dimensions are fixed, with tolerances, as noted in Figure 20.

   (b) These criteria are basically in error because they didn't request suit dimensions related to 10th to 90th percentiles for the eight body dimensions, and the general 5th to 95th percentile for all other dimensions.

(c) A 10th or 90th percentile suit is as difficult to define and as inane as the 10th or 90th percentile man. Such requests are only effectual when they are based on data from representative suits.

2. Photos 20, 21 and 22 show that the Apollo suits use a good deal of the CM free volume. Initially, the CM contractor, as part of the requirements for the Performance and Interface Specifications, defined the maximum size of the Apollo Pressure Garment Assembly (suit) size as follows:

> With a crewman in a pressurized and ventilated pressure garment assembly, fully restrained in the Command Module couch under the effect of a sustained acceleration of 5 g eyeballs in, the following exterior dimensions shall not be exceeded:
>
> (a) across shoulders - 24 inches
> (b) across elbows - 24 inches
> (c) across knees - to be determined
> (d) crown-rump length - 39 inches
> (e) buttock-knee length - 25.3 inches[40]

The above criteria were predicated on the existing distance between centerline of each of the three adjacent crewmen in the crew couch of 24.5 inches. The distance between the centerline of the vertical "X-X" struts shown in Photo 22 is also 24.5 inches.

Figure 34 shows how these dimensions were generally exceeded in the Apollo suit. For the same conditions noted by the CM contractor, the suit contractor now specifies the following dimensions:

---

[40] "GFE Crew Equipment Performance and Interace Specification," SID 64-1345, NASA Contract NAS 9-150 (Rev. A; Downey, Calif.: North American Rockwell Corporation, Space Division, Jan. 1, 1968), p. 17.

(a) Across shoulder--26 inches

(b) Across elbows--28 inches

(c) Across knees--18 inches[41]

Inconsistencies between the S/C contractor's early requirements and the suit contractor's dimensions are understandable when one looks at the point of view taken by each contractor and at the overall program objectives. Early in the Apollo development, the suit contract was given the S/C contractor's requirements for interfaces as design requirements. Since the Apollo space suit was under development and fairly flexible in design, and the S/C design configuration had some size and dimensional limits, it was appropriate to impose reasonable S/C dimensional limits and constraints on the suit development.

During 1964-1965, suit mockup evaluations revealed something shocking--the suits, especially pressurized ones, were too large for optimal operation in the CM. Extensive effort was put into reducing shoulder and elbow widths to CM requirements. Unfortunately, the requirements imposed by other CM operations (i.e., pressurized docking tunnel operations and reaching various controls), by LM operations, and lunar surface operations created suit mobility requirements which dictated shoulder and elbow joint width that

[41] "Contract End Item Detail Specification (Prime Equipment), Performance/Design and Product Configuration Requirements," CEI 3001B, Specification No. CP 3001, A7LB Pressure Garment Assembly with Integrated Thermal Meteroid Garment for Apollo Extravehicular Mobility Unit, NASA Contract NAS 9-6100, (Rev. A; Dover, Del.: ILC Industries, Inc., January 30, 1970) pp. I-27.

still exceeded CM criteria. It was not recognized enough that the suit being developed was the prime piece of lunar surface hardware; it served, in effect, as the third vehicle in the Apollo Mission. With the emphasis being one of "let's get flying and operational"--it was understandable that, although the suit was used primarily as a backup system on the CM and LM, it was developed to satisfy vehicle integration goals.

Later, the bulkiness and inconvenience during suited operations was accepted as a livable condition for vehicle operation. If the Apollo had required any long term depressurized operations, the overall crew effectiveness and mission goals would have been severely compromised by these suited discomforts and constraints. An Interface Revision notice to the Couch ICD shown in Figure 20 reads: "with three suited, pressurized (3.75 psig) crewmen in the CM couches, there is a maximum interference of 3 1/2 inches at the elbows between adjacent crewmen".[42]

3. Dimensions of suits vary with each custommade suit. As with nude anthropometric data, common and understood measurements should be made. This is important because of two features peculiar to suit measurement:

[42] Interface Revision Notice No. 9315 to ICD MH01-21020-116, PGA-CM "Foldable Couch Envelope," NR/ILCI/NASA (Rev. A; Downey, Calif.: North American Aviation, March 13, 1970).

(a) The suit shape when unpressurized, or at vented pressure, changes considerably when pressurized. Previously used benchmarks, e.g., those established at the widest point in the shoulder or elbow areas may be inapplicable.

(b) For example, measurements can be made with the subject relaxed, or straining to hold elbows in. The shoulder width and elbow-to-elbow width vary depending on the condition. The mission time available for such straining may determine whether the data are germane.

4. The 24-inch value discussed above, as the CM contractor's maximum shoulder and elbow width for the suit, is stringent in view of the elbow-to-elbow width of 19.8 inches for a 95th percentile nude crewman. This leaves 4.2 inches in each crewman's suit for ballooning in the chest area, and on both sides of the elbow. Even winter flying gear has a 4.4 inch increment over the nude dimensions.[43]

This discussion reiterates the need for a survey of Apollo suit sizes, capabilities, etc. Such information would help alleviate the problem of imposing suit size and mobility judgments on the S/C designers, whose time would be better spent in accommodating known capabilities and criteria.

---

[43] Morgan, et al., op. cit., p. 507; data from A. Damon, "Effect of Flying Clothing on Body Measurements of Army Air Force Flyers," Rept. ENG-49-695-32 (Ohio: USAF Aero Medical Lab, Wright-Patterson AFB, 1943).

Crew Compartment Closeout Provisions

Within the interior crew compartment pressure shell, there is a large amount of equipment, literally miles of electrical wiring, various runs of tubing, miscellaneous fittings, and numerous other items. These items are susceptible to damage unless protected, and present protrusions or snagging hazards to the crewman. Such damage could be caused by the ground crew, the flight crew during checkout, or the flight crew in flight. Provision for covering or otherwise guarding these hazards is required. Where possible, these should be metallic closeout panels or covers, acceptable substitutes are discussed below.

Closeout Panels or Provisions

Use of closeout panels or other protective provisions shall be implemented to cover miscellaneous equipment, wiring, tubbing, fittings, and other items distributed in the crew compartment, within the functional crew volume, or in areas accessible to contact by ground or flight crews during checkout.

Closeout panels or cover design shall serve the following functions:

1. Provide a fire abatement panel to isolate the burning equipment, etc., from internal crew compartment.[44]
2. Protect equipment, subsystem components, wire runs, tubing fittings, etc., from damage due to inadvertent abrasion, step or kick loads caused by ground or flight crews during ground operations or flight.

---

[44] Apollo Crew Compartment Design Concept Review No. 2 (Downey, Calif.: North American Aviation, Space and Information Systems Division, April 19-20, 1967), mimeographed.

3. Protect crewmen from potential ignition sources, electrical shocks, sharp edges or protrusions, and snag points.
4. Retain debris or loose equipment which may exist behind the panels--protecting crew compartment from such.
5. Provide barrier to prevent loss of equipment in inaccessible areas behind panel or prevent damage from impact of floating equipment into such areas or equipment.

Additional design criteria are:

1. Where wide expanses of such equipment or other specified items are located, and in areas where feasible, closeout panels shall be designed to provide a smooth surface, faired-in with the adjacent crew compartment structure.
2. Metal or other materials, capable of absorbing kick loads of 50 pounds, shall be used. In areas where earth gravity would provide a standing or working surface during manned S/C checkout, or other ground crew operations, the closeout shall be capable of absorbing 225 pounds without deflection. In other areas where deflection could cause equipment damage, the protections shall be capable of absorbing a 250 pound load. Area of loading shall be equivalent to a standard size shoe heel.
3. In areas inaccessible to the crew, where it is not feasible to use metal or other strong material as closeout material, fabric material may be substituted.

4. Attachment of panels shall be by captive fasteners for quick installation and removal, where needed. Design shall allow easy accessibility for troubleshooting and rework during ground operations.
5. Panels normally requiring inflight removal shall be removable by one-hand operation. Design shall allow accessibility for fire detection, fire fighting, and damage assessment during flight. Appropriate flight tools shall be provided.
6. Panels shall not allow gaps greater than 1/4" with surrounding structure except where ventilation flowthru, etc., are required.

In the Apollo CM, by blocking off the areas behind the panels, the equivalent of an enclosed compartment not to exceed two cubic feet could be provided for fire fighting. Holes in the panels 1/2" in diameter were provided in the panels to fit a special fire extinguisher nozzle. The extinguisher would inject a foam material into the enclosed volume, hopefully extinguishing the fire. An assessment of this requirement should be made to see if it is applicable to the S/C under design. This system was used only in the CM.

Photo 23 shows the left-hand side and the lower equipment bay of the CM with panels installed. In this case, a portion of the panels shown were originally designed and installed as a secondary structure--bearing plates for the crew couch. The fire extinguisher holes were marked by red rings, some of which are visible in the photo. Areas behind the main display console, about half of which is shown in the

Photo 23 CM Left Equipment Bay

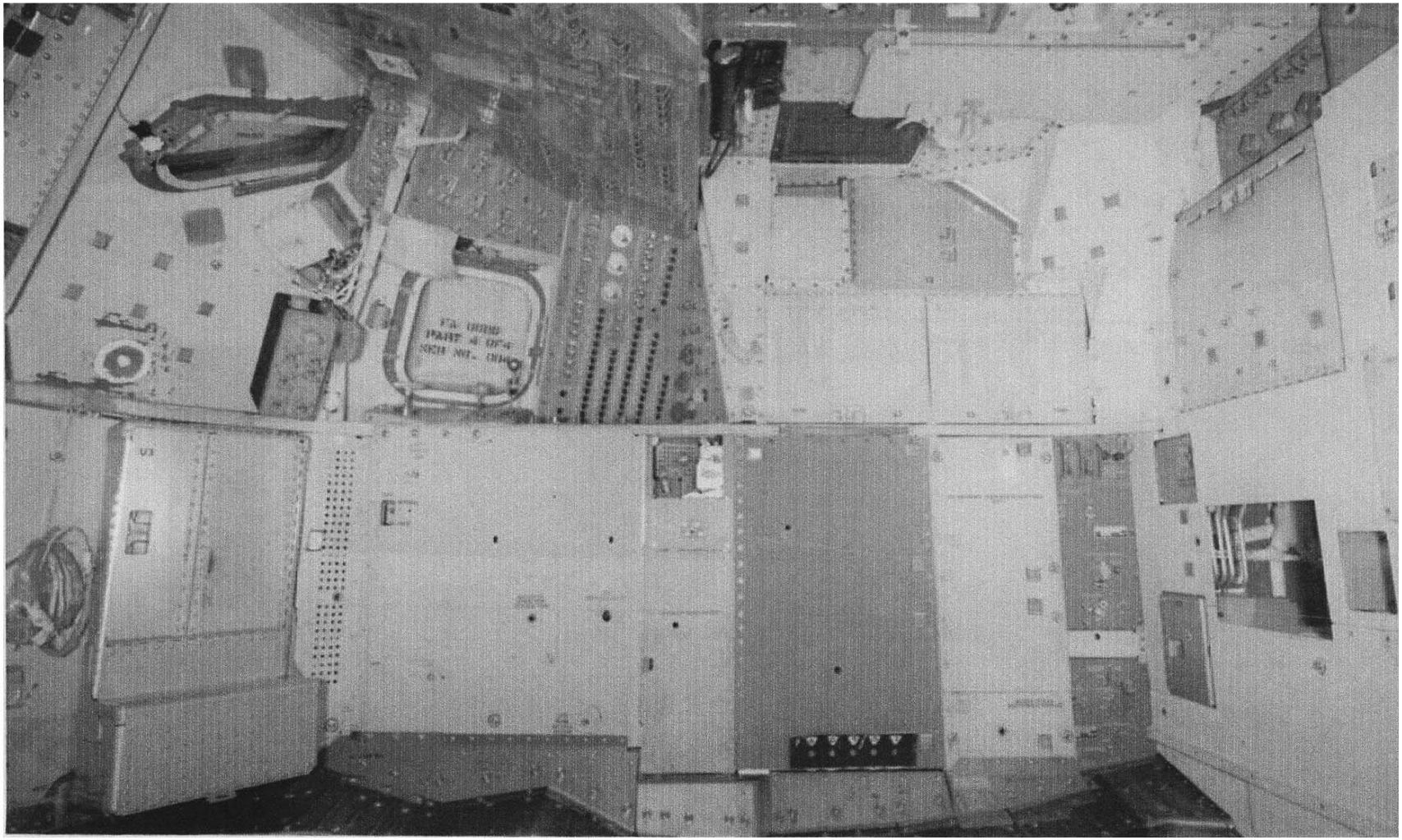

Photo 1: Apollo CM Closeout Panels Shown

upper left-hand portion of the photo, also had holes for use with the fire extinguisher. Photo 24 is a closeup of Photo 23 , showing a fire port clearly, the captive fastners used to remove the panel. Photo 25 shows a plastic closeout panel used at the overhead portion of the LM crew station. In the LM, inaccessible wiring areas, etc., which normally would be covered because of damage potentiality were not covered due to the severe weight margin of the LM. Areas susceptible to damage were appropriately covered.

Although not visible, in Photo 24 , several lengths of water-glycol tubings are covered by the panel, after the panel was conveniently added to the area. If not covered by a panel, the tubing should be either hidden sufficiently, so that accessibility and damage to it is impossible, or it should be protected by a special cover. Photo 26 shows the LM Environmental Control System package with its own protective cover. Photo's 5 thru 9 show that the Russian S/C use a "porolon" material which performs the same function of a closeout as discussed here.

Debris/Equipment Traps and Nets

For inaccessible areas of the LM, where equipment could float, get lost or cause damage, debris netting was used. This netting was attached to the S/C with snaps and removable for access to equipment. Photo 3 shows the netting installed in the left-hand, aft section of the LM.

Compartments built into the S/C and stowage lockers shall be designed to permit no more than an 1/8" gap or hole into inaccessible

Photo 24. CM Close-up View Closeout Panel, Left hand Equipment Bay

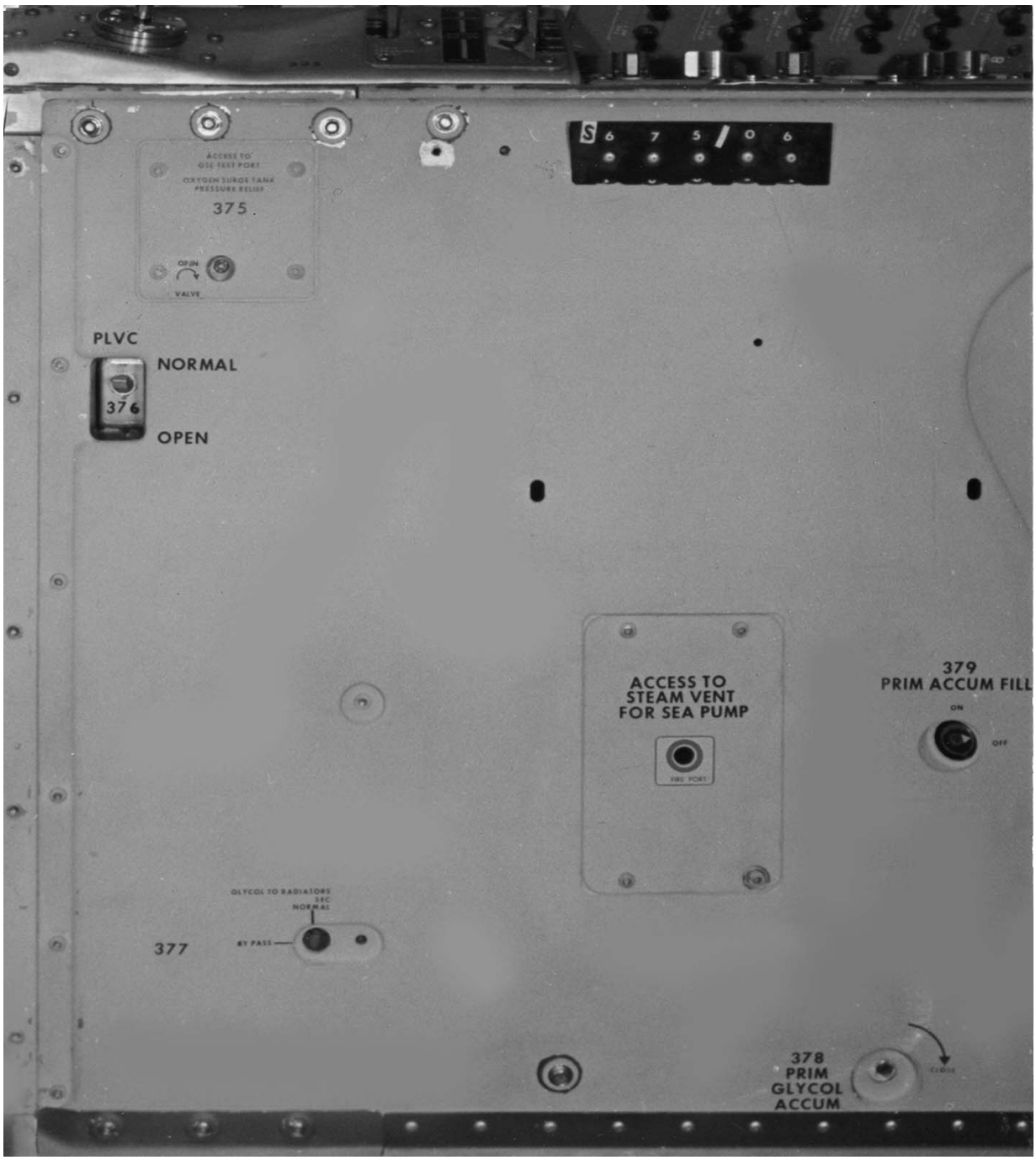

Photo 25. View of Overhead LM Ceiling

Photo 26. LM Environmental Control System, Showing Cover

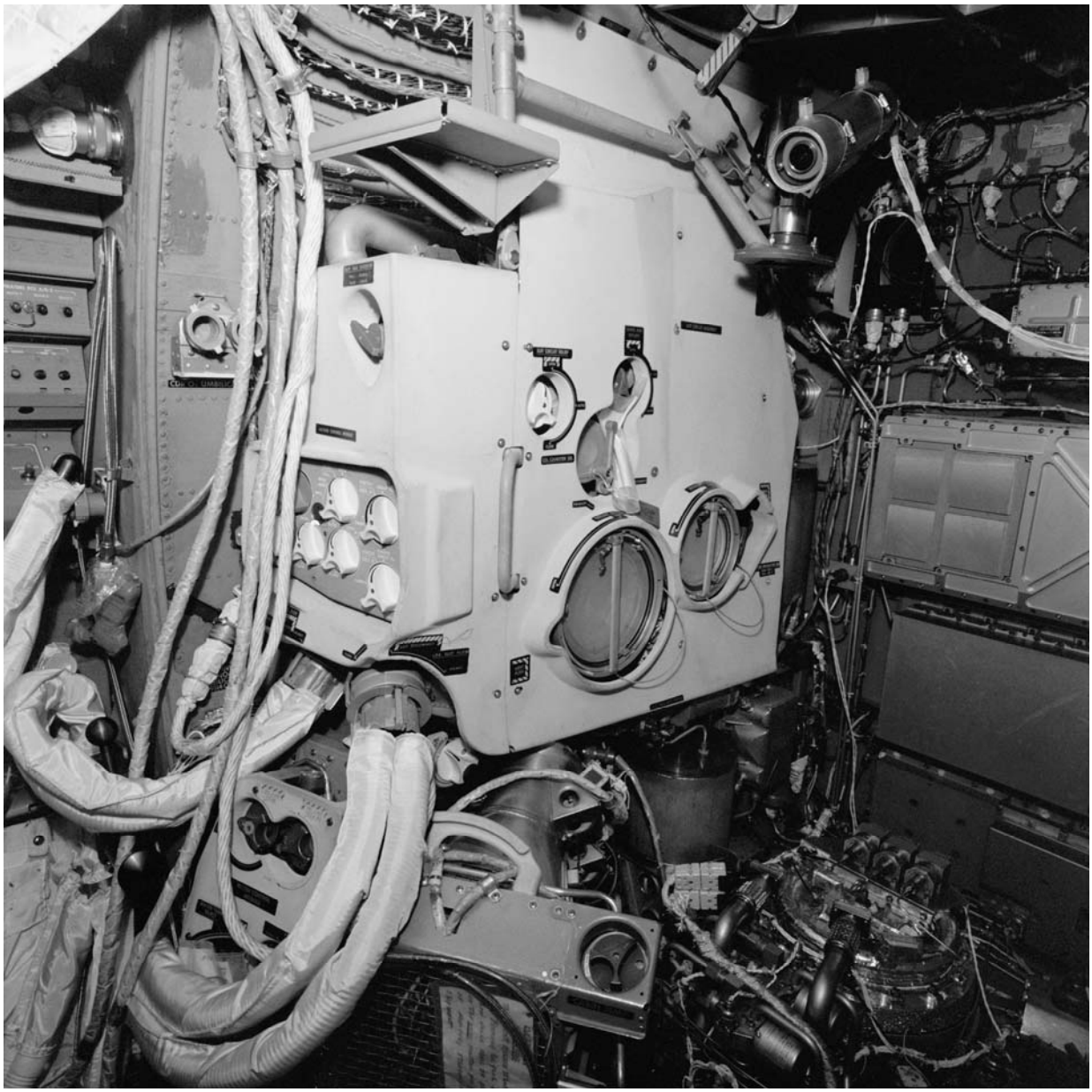

areas. This requirement will prevent loss of small items which might be stowed in the compartments.

In one Apollo CM spaceflight, a loose piece of Velcro apparently became loose and floated into the cabin fan. After that flight, debris guards (screens) were installed over the fan areas. As a result, the NASA Design Standard Bulletin states the following requirement which should be implemented in manned spacecraft:

> Crew compartment ventilating fans shall be protected by screens or other devices to prevent entrance of debris that could damage or jam the fan blades during zero-gravity conditions.[45]

Care should be taken to allow for tool access to parts through the guard, or removal of the guard during flight, if maintenance requirements dictate such access.

Wire/Tubing Protection

As indicated, where feasible, closeout panels may be used to protect exposed tubing and wiring. Where these provisions are not available, or the items are not buried so they are completely inaccessible, special guards or enclosures shall be provided.

Main wire runs shall be completely enclosed in cable trays designed to absorb 225 lbs. without deflection and be faired into the structure as much as possible. Area of load shall be equivalent to a standard size leather shoe heel. Wiring shall allow accessibility for troubleshooting and rework during ground operations, fire detection, fire

[45] Design Standard Bulletin, Serial DS-79 (Washington, D. C.: NASA, June 6, 1969).

fighting, and damage assessment during flight. Appropriate flight tools shall be provided. Consideration of damage assessment accessibility shall allow visual inspection of the damaged area by crew assessment with or without assistance from the ground.[46]

Photo 27 shows a typical CM wire tray run; a S/C wire tray is shown in Photo 28.

Chafe protection shall be provided for wiring and tubing where there is any likelihood of doors or panels abrading them. Nonmetallic chafe protection shall be used where wire chafing might occur.

Windows

Windows may be used interchangeably with viewports, portholes, or illuminators (in some Russian translations, etc.). Other optical devices such as periscopes, sextants and telescopes may, like a window, allow outside views from within a spacecraft.

Current S/C Use/Design

In the United States, the Mercury Spacecraft had one window, the Gemini Spacecraft two, the Apollo CM five and the LM three. The Russian spacecrafts reportedly have had windows as follows: three windows in Vostok S/C; three windows in Voskhod 2; and four portholes in the orbital compartment of the Soyuz.[47] The Apollo CM windows

---

[46] North American Aviation, Space and Information Division, MCR A3834, Rev. 4, June 26, 1967.

[47] William Shelton, Soviet Space Exploration, the First Decade (New York: Washington Square Press Inc., 1968), pp. 125-26; D. Viktozov, In Open Space--Voskhod-2 Spacecraft Design translation of "V Otkrytom Kosmose--Ustroystvo Korablya, "Voskhod-2," Aviatsiya i Kosmonavtika, Vol. 48 (1965), pp. 17-19, NASA TT F-10, 216 (Washington, D. C.: NASA June 1966); and Tass Report: "On the Road to Orbital Stations," Krasnaia Zvezda, No. 269 (13708), Nov. 17, 1968.

Photo 27. Wire Trays Shown in CM Mockup

Photo 28. S/C Wire Tray Shown in Lower Part of Photo

are illustrated in Figure 6:

> Five windows are provided through the inner structure and heat shield of the Apollo CM: two forward viewing and two side observation windows and a hatch window.... The inner windows are made of tempered silica glass with 0.25-inch-thick double panes, separated by 0.1 inch of space, and have a softening temperature point of 2000°F. The outer windows are made of amorphous-fused silicon with a single 0.7-inch-thick pane. Each pane contains an antireflecting coating on the external surface, and has a blue-red reflective coating on the inner surface for filtering out most infrared and all ultraviolet rays. The glass has a softening temperature of 2800°F, and melting point of 3110°F.[48]

The location of the three Lunar Module windows are shown in Figure 11 and Photo 2. Their specific shape and cross section are illustrated in Figures 38a and 38b . These windows are further described:

> Two triangular windows in the front face assembly provide visibility during descent, ascent, and rendezvous and docking phases of the mission. Both windows have approximately 2 square feet of viewing area; they are canted down to the side to permit adequate peripheral and downward visibility. A third (docking) window is in the curved overhead portion of the crew compartment shell, directly above the Commander's flight station. This window provides visibility for docking maneuvers. All three windows consist of two separated panes, vented to space environment. The outer pane is made of Vycor glass with a thermal (multilayer blue-red) coating on the outboard surface and an antireflective coating on the inboard surface. The inner pane is made of structural glass. It is sealed with a Raco seal (the docking window inner pane has a dual seal)

---

[48] Apollo Operations Handbook, Block II Spacecraft, Vol. 1, Spacecraft Description, SM2A-03-Block II-(1) (Downey, Calif.: North American Rockwell Corporation, NASA Contract NAS 9-150, Exhibit I, Paragraph 10.3, 10-15-70), pp. 1-38.

Figure 38 DETAILS OF LM WINDOWS

a. FRONT WINDOW

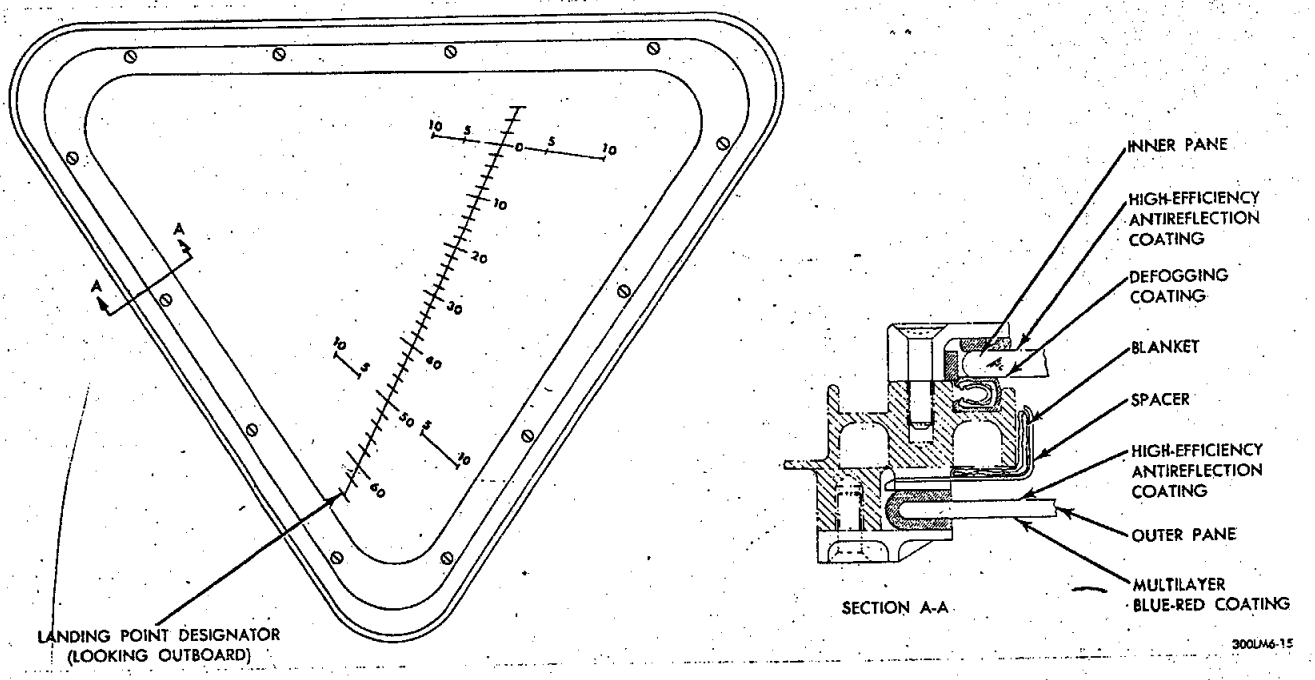

b. DOCKING WINDOW

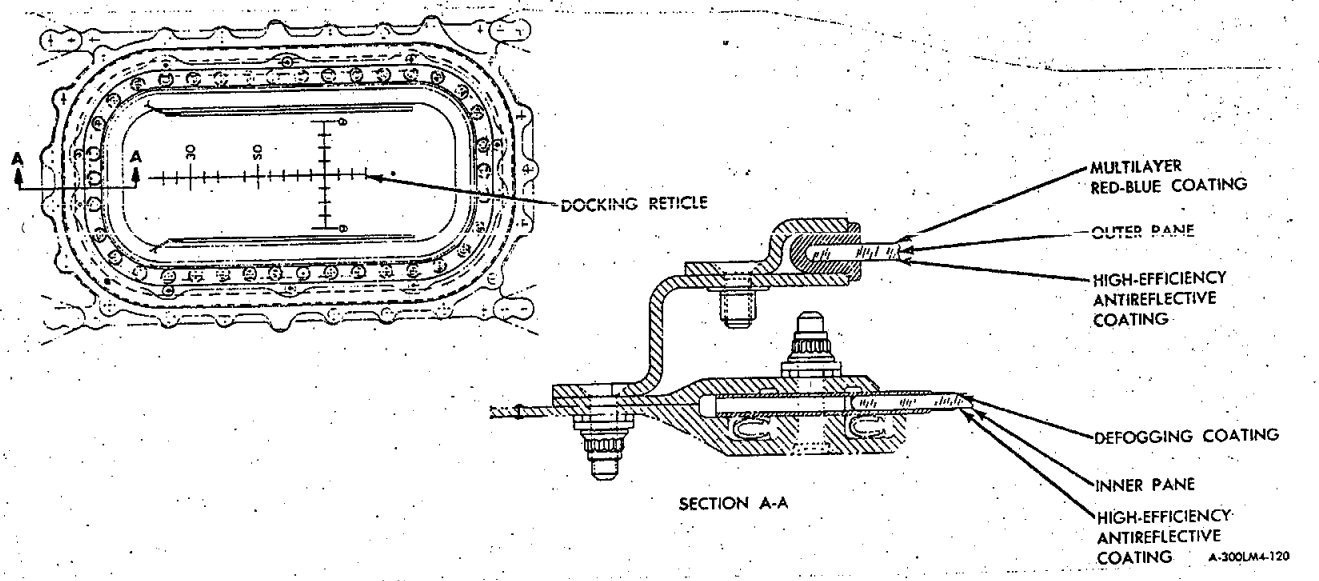

Source: Apollo Operations Handbook, Lunar Module, Vol. I: Spacecraft Description. Apollo Document LMA790-3-LM (Bethpage, N. Y.: Grumman Aerospace Corporation, NASA Contract NAS 9-1100, December 15, 1968), p. 1-11.

and has a defog coating on the outboard surface and an antireflective coating on the inboard surface. Both panes are bolted to the window frame through retainers.[49]

General Functions and Requirements

Windows in spacecraft can serve any of the following functions:

1. As general observation and viewing ports, for use in manned surveillance and reconnaissance, and for taking documentary or technical photographs, motion and television pictures.
2. For viewing during S/C rendezvous and docking sequences which require or provide visual alignment and use of optical alignment devices (i.e., the Apollo CM and LM docking procedures as shown in Fig. 39).
3. When in combination with alignment marks on the windows, they can serve to aid the crew in monitoring entry maneuver, and also function as a visual reference for orientation during a manually controlled entry.[50]
4. For visually examining and photographing mission anomalies, such as those experienced during the Apollo 13 Mission (CSM damage) and the Gemini IX-A Mission (the "angry alligator").

---

[49] Apollo Operations Handbook, Lunar Module, LM-6 and Subsequent, Vol. I: Subsystems Data, Apollo Document LMA 790-3-LM6 and Subsequent (Bethpage, N. Y.: Grumman Aerospace Corporation, NASA Contract NAS 9-1100 9-15-70), pp. 1-10.

[50] Skylab Operations Handbook, Volume 1: Command and Service Description (Downey, Calif.: North American Rockwell Corporation, March 15, 1971), SM 2A-03-Skylab-(1), SD 69-248-1, Contract NAS 9-150, S/A 500.

Figure 39 LM/CMS DOCKING ORIENTATION AND SIGHTING

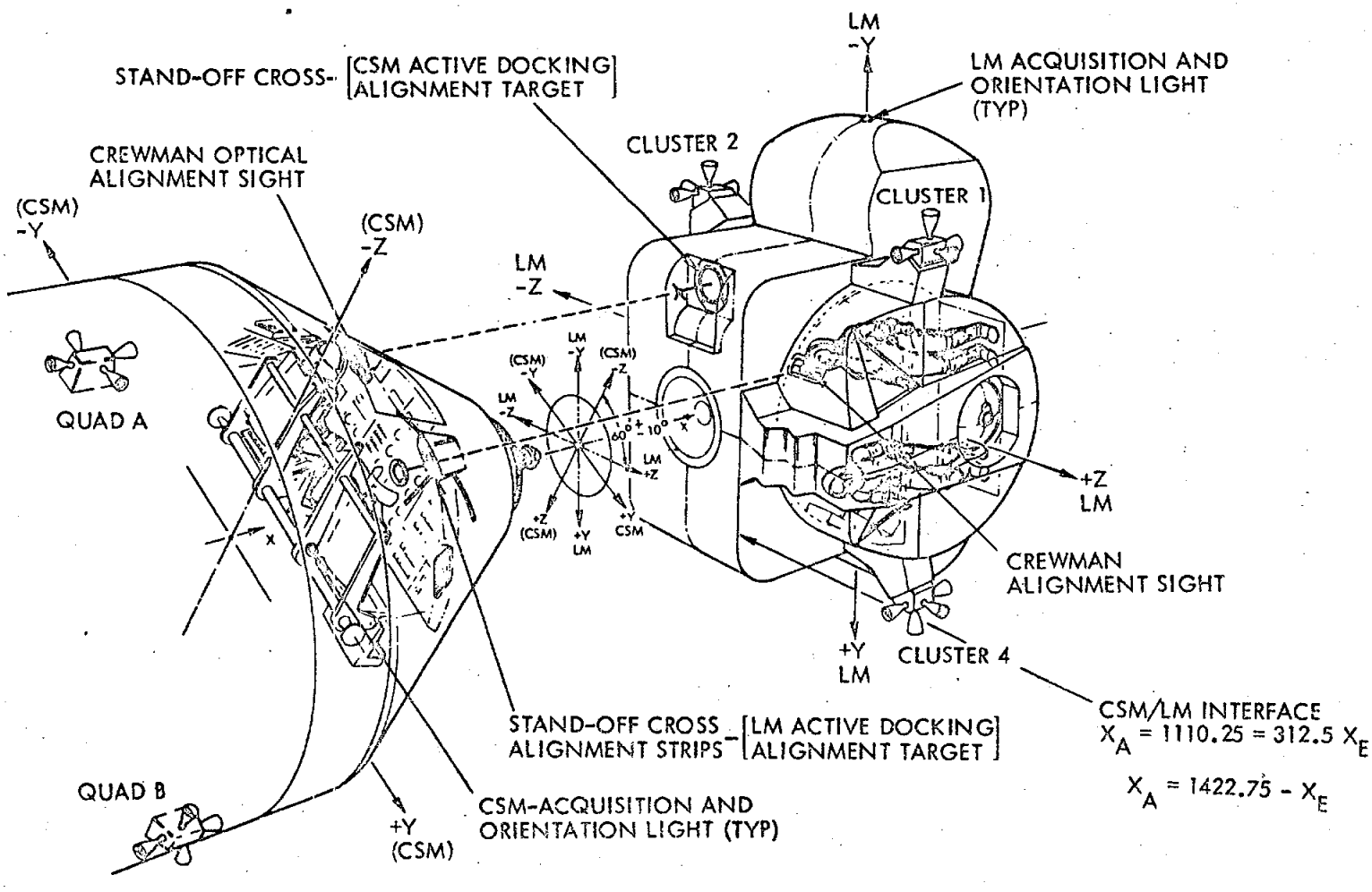

Source: CSM/LM Operational Data Book, Vol. II, LM Data Book, SNA-8-D-027 (II) (Bethpage, N. Y.: Grumman Aircraft Engineering Corporation, Revision 2, July 1971) p. 2-13.

5. For use in performing special experiments, either photographic or for testing visual capabilities (i.e., the Gemini Experiment S-8/D-13, Visual Acuity and Astronaut Visibility).[51]
6. For observing and monitoring the area on which the vehicle is descending and allowing assessment of the descent rate, and otherwise aiding in choice landing site, as in landing the LM on the lunar surface. Figure 40 shows a simulated LM Commander's field of vision through left-hand LM triangular window.
7. For performing manual S/C navigation, as in the Gemini Program and Russian Voskhod flights.
8. For use in visually monitoring crew activities during hazardous ground tests, either with closed-circuit television or visual observers. Windows are also of considerable aid in observing evaluations and testing performed in S/C or S/C configured mockups.
9. For use, after spacecraft landing, of visual signals between ground support crews or postflight rescue swimmers, and flight crew.
10. For use in verifying S/C altitude aborts and deployment of parachutes during entry. Depending on the spacecraft's configuration, mirrors may be required to accommodate the necessary field of view.

---

[51] Seibert Q. Duntley, et al., Experiment S-8/D-13, "Visual Acuity and Astronaut Visibility," Gemini Midprogram Conference Report, Part II Experiments. NASA-MSC (Visibility Laboratory, Scripps Institute of Oceanography, University of California, February 23-25, 1966), pp. 3-1, 3-43.

FIGURE 40

CDR'S WINDOW VIEW FOR APOLLO 14

MPAD 70-107.0 V

(ALTITUDE 6000 FT)

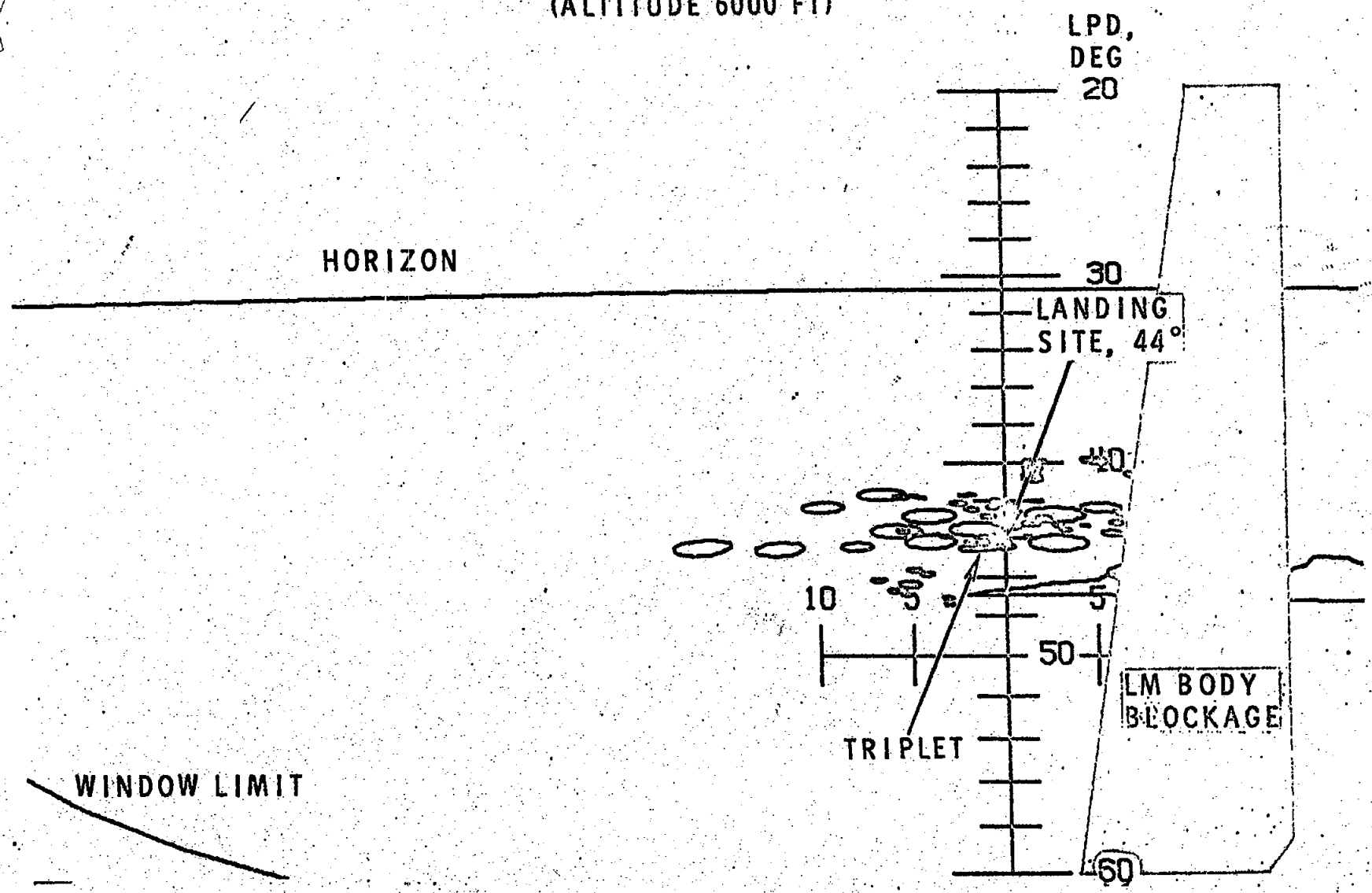

Source: Apollo 14 and 15 Mission Review, (Houston, Texas: NASA-MSC, November 12, 1970).

11. As a general comfort and psychological aid to crewmen by allowing outside viewing.

12. Should the spacecraft allow takeoff and landing similar to current high performance aircraft, then windows (or windshields if feasible) would have to satisfy the attendant visual requirements. In aircraft, such requirements typically entail direct vision much of the time for taking off, navigating, judging altitude, detecting and identifying ground objects, landing and, to some extent, fire control.[52] Spacecraft of this type should offer much greater and unobstructed visual field than currently available.

It would be valuable to compare the amount of visual field available through window areas of known spacecraft, with total viewing space within these spacecraft, but such data are lacking. Chapanis indicates, for example, that in aircraft the pilot of a Super-Constellation can see less than one-eighth of the space around him; the pilot of the DC-7 scarcely one-tenth.[53] The window or windshield area, by itself, is not necessarily a significant measure of the viewing area, since visibility depends on (1) eye height, (2) distance of the eye from the window or windshield, (3) obstruction to vision, (4) light transmission qualities of the windows, and (5) crew position and orientation within the S/C.[54]

---

[52] J. W. Wulfeck, et al., Vision in Military Aviation, WADC Technical Report 58-399, Astia Document No. AD 207780 (Ohio: Wright Air Development Center, Air Research and Development Command, Wright-Patterson AFB, November, 1958), p. 165.

[53] Alphonse Chapanis, Man-Machine Engineering (Belmont, Calif.: Wadsworth Publishing Company, July 1969), p. 4.

[54] Bennett, Degan, and Spiegel, op. cit., p. 258.

Since there are so many spacecraft configurations, and possible type missions and usages, specifications for window/windshields must be developed to meet the design criteria dictated by these factors. The degree of micrometeroid protection or crew viewing position may, for example, influence the window design significantly.

Vision in Military Aviation is an excellent source of general visual criteria, and windshield design requirements for aircraft.[55] Other requirements to be considered are: fields of view, including crew position, restraint and suit wearing mode, and eye position as affected by these factors; optical clarity requirements and characteristics desired; relative area susceptible to micrometeroid contact; effect of window area on structural factors, weight implications, etc.; sealing of windows to prevent contamination of outgassing sealants; heat leak or possible condensation/defogging problems on window structure when open or covered by shades; physiological eye protection from intense direct sunlight; light occlusion requirements and hardware implications; and the potential for internal damage to the window areas through inadvertent crewman contact during activities.

During the Apollo Program, several problems found with windows were:

1. Throughout a number of the Apollo flights, the S/C windows became contaminated and coated to varying extents. An

[55] Wulfeck, op. cit., Military Standard MIL-STD-850A, "Aircrew Station Vision Requirements for Military Aircraft," June 8, 1967, and Military Standard Standard MIL-STD-1472A, "Human Engineering Design Criteria for Military Systems, Equipment and Facilities," May 15, 1970.

analysis of the Apollo 8 contaminants confirmed that outgassing from the RTV sealant compound was the major cause.[56] After the Apollo 12 mission, similar problems were attributed to a concentration of silicone oils higher than expected on the inside surface of the hatch window. These oils were outgassed products from the materials used to seal thermal blankets near the window.[57] Photo 29 shows the hatch window clouded in flight during the Apollo 13 Mission.

2. In addition to the window contamination caused by these compounds, moisture on the windows was a frequent problem. In later missions, an insulation blanket was added to cover windows and surrounding wall areas to prevent condensation.
3. The CM forward viewing windows were critical during rendezvous and docking sequences. The internal spacecraft area immediately surrounding these windows tended to be cluttered with mirrors, miscellaneous brackets, cameras, and other items which obstructed clear use of the window. Designs should ensure access to window areas and preserve the available field of view from the "erosion" which generally results during development.
4. The optical quality of the CM window material, Al-SiO_2, was less than desired for obtaining high quality photographs

[56] Apollo 8 Mission Report, MSC-PA-R-69-1, prepared by Mission Evaluation Team approved by George M. Low, Manager, Apollo Spacecraft Program (Houston, Texas: NASA, MSC, February, 1969), pp. 6-4.

[57] Apollo 12 Mission Report, MSC-01855, prepared by Mission Evaluation Team approved by James A. McDivitt, Manager, Apollo Spacecraft Program (Houston, Texas: NASA, MSC, May, 1971), pp. 14-20 - 14-21.

Photo 29. CM Hatch Window Contaminated During Apollo 9 Mission

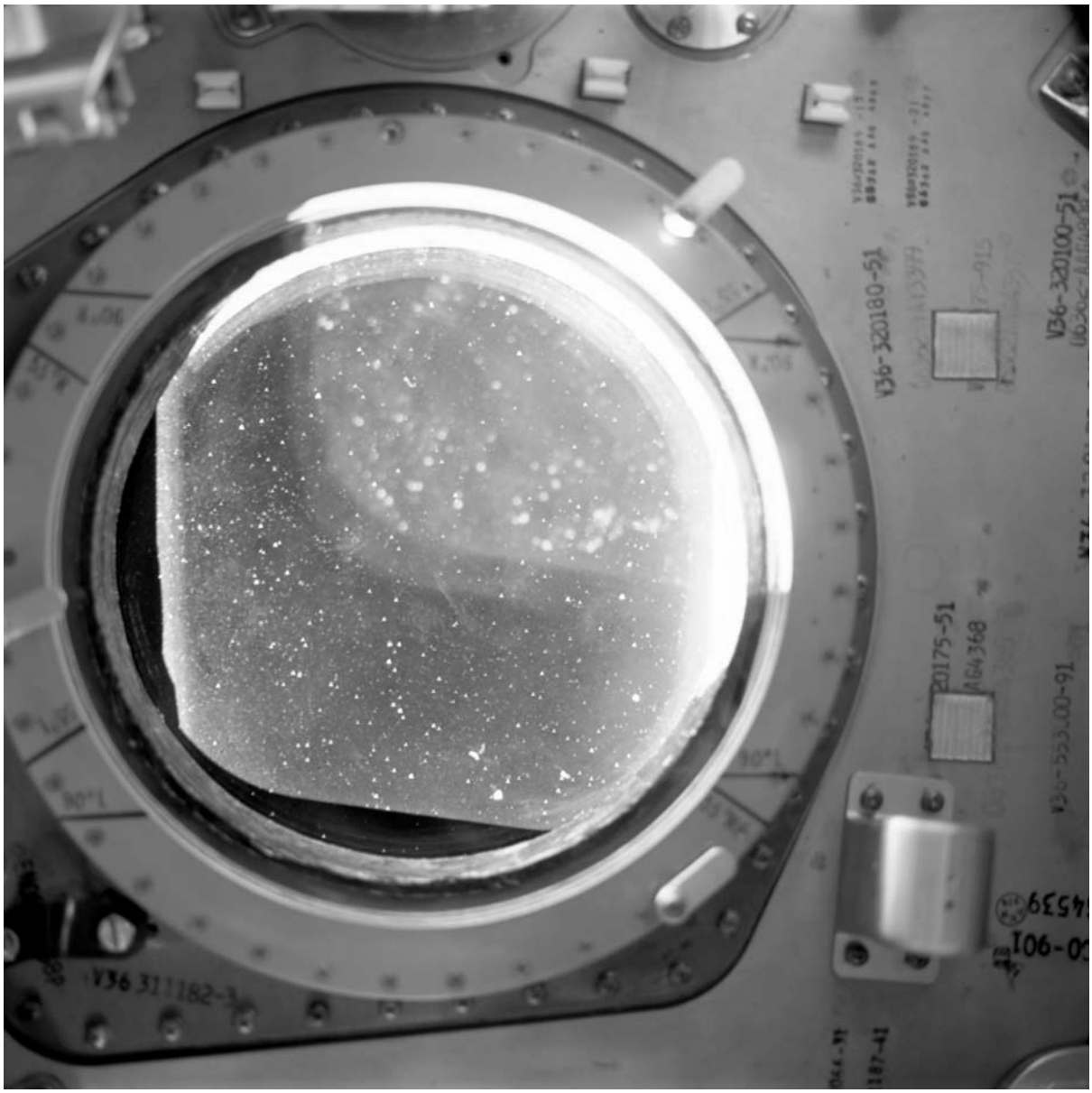

with resolution camera experiments. As a result, there was a proposal to change the hatch window material to quartz on later spacecraft to improve the optical quality and camera focus. In some instances, certain window coatings have been found to interfere with particular types of photographic experiments.

5. Provisions should be made for sealing windows from undesired solar and other external illumination sources. There were continual problems on CM Apollo Missions in maintaining a leak-proof seal on the aluminum shades used to occlude the light. Even small light leaks through these shades are a nuisance, create excessive glare on instruments, as well as visual discomfort.

Sharp Edges, Corners, and Protrusion Hazards

Basic Factors

Sharp corners or edges, burrs, and excessive protrusions on equipment, and on the inside and outside of spacecraft where crewmen may venture, present potential hazards to crewmen and garments. The physiological hazards involved are cuts, abrasions, bruises, punctures, splintering, concussions, lacerations, etc., and potential infections. Snagging may cause physiological damage, throw a person off balance, and cause falls, tear garments, or impede movement. In time-critical cases, such as when evacuating from a hazardous area, impediment of movement could have serious repercussions. Garment tears may be

particularly hazardous for personnel in space suits, or could create ineffectiveness in the suits, thermal insulative barrier, or damage other functional equipment mounted or attached to the garment. Sharp edges and corners can also damage unprotected spacecraft cables, wiring, and other equipment.

Such hazards as these should obviously be avoided by good design--proper precaution should be included in the basic design of equipment and in the general crew station. Design criteria should be readily available or identifiable as standards for structural designers, human engineers, and others dealing with spacecraft design and equipment.

One powerful precedent for designers (industrial designers, architects, and engineers) was found in the Standard Handbook for Mechanical Engineers, the American Standard on Surface Texture, and the American Standard on American Drafting Standards Manual.[58] This precedent is one which calls for smoothing, deburring, etc., of edges and corners only where "essential" to affect the appearance or mechanical performance of the item. Such smoothing processes are expensive and may cause lessening of the proper emphasis on the

[58] Theodore Baumeister (ed.), Standard Handbook for Mechanical Engineers (7th Ed.; New York: McGraw-Hill, 1967); American Standard, Surface Texture, ASA B 46.1 (New York: The American Society of Mechanical Engineers, 1962); USA Standard, Requirements for Sanitation in Places of Employments, USAS Z 4.1, 1968.

machining of surfaces which truly require such processes. Determination of the requirements for such operations is left to the designer.

Specific design requirements for eliminating sharp edges and corners are not available in the industrial, architectural, and engineering literature. Although some references provide for minimization or elimination of protrusions, no specific criteria are available on design guidelines to follow for eliminating these hazards or for making them acceptable.

Standards do exist for many of the items used by industry and consumers, and for aircraft and spacecraft, but contain little information on these hazards. There is a need to determine by means of an extensive research study what specifically is required in the way of radii for edges and corners, minimally acceptable surface roughness values, and maximum allowable shapes for protrusions. Such requirements may vary depending on the application and, perhaps, to what area of the body the hazard is presented (i.e., feet, waist, head, etc.). Physiological damage by the hazards mentioned is affected by other factors such as: the angle at which the object is contacted, the properties of the object hit; and the force with which the object was hit. The research should include the physiological and engineering effects of mechanical surface textures and shapes on allowable skin pressures and loads, in addition to the other factors mentioned.

Examples of Problems

The existence of unacceptable sharp edges, corners, and protrusions in the S/C crew station plagued the CM and LM S/C development as a "generic" problem. Such hazards have also been found to slip into flight spacecraft, despite efforts to avoid them. A list of typical problems found in this area is as follows:

S/C Review or S/C Where Found	Problem/Result	Solution Implemented
Flight S/C prior to CM S/C 108, S/C 108, and S/C 109[a]	Stowage Compartment R-8 where medical kit stowed had sharp edges. Kit torn during flight missions.	None known
CM S/C 104[a]	Stowage Compartment B-2 Protruding spring wire.	RTV compound applied to spring area.
A number of S/C prior to CM S/C 108[a]	Rough protrusions in stowage compartment R-4 (survival kit stowage): (1) Originally, screw heads were protruding into compartment, and kits were torn during removal.	(1) Screws counter sunk
	(2) Sharp edges on latching block of compartment R-4. Kits torn upon removal.	(2) Asbestos and flourel compound applied to edge to smooth it out --Applied on S/C 108 thru 115A.
S/C 101 Delta Phase III CARR	Sharp edges documented on three separate DR's-- "Potential damage PGA gloves	Sharp edges eliminated or caused

[a] Letter PD8/L837-PP5-69-266 to North American Rockwell Corporation, from R. Hood, NASA-MSC, NASA Contract NAS 9-150. Written by PD8, E. Rangel/J. Goodman.

cont.

S/C Review or S/C Where Found	Problem/Result	Solution Implemented
S/C 112 and Subsequent EVA PDR	Numerous sharp edges in Service Module Bay where EVA crewman works	Round corners and edges, add plate to act as a recess into which protruding sharp ends of bolts would be buried, and add cover over hinge fairing to preclude crewman or cable snagpoint.

Recommended Criteria

The criteria recommended below provide a preliminary standard which can be temporarily used until the study discussed above can provide an engineering and physiological basis for a new standard.

Human Engineering Design Criteria for Surface Quality, Edges, Corners, and Protrusions in Equipment or Hardware:

1. Scope: This criterion is to establish minimum requirements and to serve as a general guide to design, fabrication, and installation of spacecraft equipment or hardware which is used by crewmen, or to which crew exposure is likely. It applies to individual hardware items handled by crewmen, as well as "composite" configuration(s) which hardware installation and arrangements present to the human user.

2. Referenced documents:

   a. Human Engineering Design Requirements for AAP Experiments, Drawing Number 10M32447, (Rev. A; Huntsville, Ala.: George C. Marshall Space Flight Center, February 28, 1969), p. 19.

   b. Specification Change Notice Number 58-27a, Engineering Change Proposal Number 13332, May 13, 1970 to SD69-315,

Apollo Lunar Exploration Missions Experiment Instruments Performance and Interface Specification Block II-CSM, December 22, 1969. Prepared by North American Rockwell Space Division, NASA Contract NAS 9-150.

c. USA Standard, Safety Requirements for Floor and Wall Openings, Railings, and Toe Boards, A 12.1 - 1967.

d. Military Standard, Human Engineering Design Criteria for Military Systems, Equipment and Facilities, MIL-STD-1472A, May 15, 1970.

e. Wesley E. Woodson, and Donald W. Conover, Human Engineering Guide for Equipment Designers (1st ed.; Berkeley: University of California Press, 1964.)

f. American Standard, Surface Texture, ASA B 46.1 (New York: The American Society of Mechanical Engineers, 1967).

3. Definitions:

a. For the purposes of this criterion the following commonly used terms may constitute potential hazards if they meet the requirements for "unacceptability" as defined herein:

Sharp edges

Sharp corners

Sharp points

Jagged edges

Snags

Projections

Projecting corners

Projecting edges

Protrusions

Rough surface

Burrs

Fins

Slivers

Splinters

Metal filings

Metal chips

Material Imperfections

b. Edges and Corners[59]

Edge--the meeting of two surfaces not of the same plane;

Corner--the meeting of more than two surfaces not of the same plane.

c. Nomenclature used for Hazards and Means to Preclude them. See Table 12 at end of this discussion for listing of frequently used nomenclature.

4. General requirements:

a. Hardware--All to be physically handled, operated, or otherwise used directly or indirectly by crewmen shall conform to the criteria as specified here.

b. Equipment/hardware configurations--Equipment and hardware installations, layouts, and general configurations to which crewmen are directly exposed, or can be reasonably indirectly exposed to, shall conform to criteria as specified here.

[59] Definition from Human Engineering Design Requirements for AAP Experiments, op. cit..

c. Use environments--Environments to be considered as the following:

(1) One-gravity ground test conditions and spacecraft orientation configurations.

(2) Zero-gravity conditions

(3) Other gravity conditions imposed by mission or which could reasonably be imposed on the crewmen during mission phases (g's imposed by booster separation, docking and undocking, thruster firings, launch and landing).

(4) Maximum crewmen acceleration to be considered during zero-gravity phases of mission shall be six feet per second.

d. Edges, corners, surface quality, and protrusions--All hardware and equipment meeting the description provided by a and b above shall be designed and installed so there are no sharp edges or corners, burrs, fins, rough surfaces, snag points, or other properties which can cause physical injury to crewmen. Properties shall also not induce tearing of crewman apparel or excessive wear during reasonable use and activity.

e. Projections, protrusions, and snagging points--All hardware and equipment conforming to that as noted in paragraphs a and b above shall be designed so there are no protruding/projecting corners, edges, knobs, or other items which could

create snagging, bumping, tripping, or otherwise cause physical injury to persons using or passing by these objects during reasonable use and activity.

(1) Exposed ends of hardware face sheets, metal plates, etc., shall be beveled or rounded to preclude snagging or tripping hazards.

(2) Ends of rails and handbars shall not overhang the terminal posts or uprights where such overhang would constitute a projection hazard, as identified above. If ends to rails and handbars are required, they shall be turned in to the supporting structure or otherwise arranged not to constitute a projection hazard or snag point.

f. Alternate methods of alleviating hazards--If for justifiable reasons, the provisions of paragraphs d and e above cannot be met to protect against the hazards identified, the following alternative means shall be used:

(1) Recess (inset), shield, or otherwise surround the area so human contact is not possible.

(2) Guard or cover the hazardous area with protective shields, guards, padding, etc.

g. Sheet metal and metal trim--Sheet metal edges shall be bent, rolled, bulbed or beaded to eliminate sharp edges. Sheet metal corners shall be welded, soldered, etc., and smoothed to preclude sharp corners or unacceptable protrusions.

h. Frangible materials--Avoid use of fragile materials which will shatter or break in an accident, leaving hazards such as those described above.

5. Specific requirements:[60]

a. Edge and corner radii

Application	Radius in inches outer	Radius in inches inner	Remarks
Exposed edges of sheet metal, flanges, and other hardware	.06	--	
Exposed corners of metal, boxes, equipment, etc.	.50	--	
Access holes, cut-outs, etc.	--	(TBD)[a]	Will vary with material thickness

b. Protrusions

Small protrusions: less than 3/16 inch long, (TBD)[a] inches wide	.06	--	Absolute minimum unless protruding corner is greater than 120 degrees
Large protrusions: greater than 3/16 inches long, (TBD)[a] inches wide	(TBD)[a]		

[a]To Be Determined

continued--

[60]Preliminary version requires study and verification. Includes writer's subjective values, and data from References 2b and 2d above.

Application	Remarks
Screw heads, bolts, nuts, nut plates, excess threads and rivets which can be contacted by crewmen.	All screw and bolt heads shall face outside of hardware, if possible. Where nuts, nut plates and threads are exposed, they shall be securely covered. Recessed heads or use of recessed washers are recommended. Overall height of heads shall be within .125 or covered unless over 7 head diameters apart from center to center. Height of round head or oval head screws is not limited. Screw or bolt heads over .25 deep must be recessed or have fairing over them. Rivet heads shall face out on all areas accessible to crewmen and shall protrude no more than .06 unless spaces more than 3.5 head diameters from center to center. In all exposed areas where upset ends of rivets extend more than, .12, or .5 of upset end diameter if over .12, a fairing shall be installed over them. This applies to explosive, blind or pull rivets, etc. Upset ends of rivets must have edges chamfered 45 degrees or ground to a minimum radius of .06. A maximum gap of .02 will be allowed only between one side of a fastener head and its mating surface. Burrs must be prevented or eliminated. Use of Allen heads is preferred. Torqueset, slotted or Phillips head screws must be covered with tape or other protective materials or be individually deburred prior to flight.

Application	Remarks
	Where bolts, etc., are torgued and inspection performed, the material used to signify that torgue has been applied or that inspection has occurred, shall not itself constitute a sharp edge.
Latching devices	All latching devices shall be covered in a manner that does not allow gaps or overhangs that can catch fabrics, or pressure suit appendages, or shall be designed to prelude catching of fabrics and pressure suit appendages.
	All surfaces and edges shall be smooth, rounded and burr free.
Lap joints in sheet metal mismatching of adjacent surfaces	All surfaces shall be mated within .03 of flat surface at edges, or shall be butted or recessed. All exposed edges must be smoothed and radiused .06 minimum (as above), chamfered 45 degrees, or covered with an appropriate material to protect the crewman, his PGA gloves, or apparel.
Sheet metal structure, box and cabinet three-plane intersecting corners	Spherical welded or formed radii are required unless corners are protected with covers.

c. Surface quality--the surface roughness height (in micro-inches) of materials shall not exceed a maximum of 125 micro-inches.

Table 12. NOMENCLATURE USED FOR HAZARDS AND MEANS TO PRECLUDE THEM

Types of hazards and nomenclature used for them	Machining or manual finishing used to preclude hazards	Round edges/corners finishing callouts	Methods of protection or guarding for protrusions, sharp edges and corners
Sharp edges	Lapping	Break sharp edges	Inset items
Sharp corners	Burnishing	[illegible] not to [illegible] radius	Set flush with surface
Sharp points	Polishing	Finish all over	Cover with insulation
Jagged edges	Grinding	Rough finish	Pad edges or corners
Snags	Chamfer	File finish	Guard the area
Projecting corners	Filing	Deburr	Wear protective clothing
Projecting edges	Sheet metal rolling	Remove burrs	Ends turned into the supporting structure so as to not constitute projection hazard
Protrusions	Turning	Scrape	
Protruding edges	Milling	Grind smooth	
Sharp projections	Buffing	Lapped or lapped flush	
Rough surface	Superfinishing	None	
Burrs	Hand Chase	Polish	
Fins	Sandblast	Buff	
Slivers		Burnish	
Splinters		Hand chase	
Metal filings		Superfinish	
Injurious imperfections		No sharp edges	
		No pointed corners	
		Fillets (inside radius)	
		Rounds (outside radius)	
		Round all edges	
		Bevel edges	
		Wire brush	
		Corners welded and ground smooth	
		Dress smooth	
		Grind smooth	
		Grind perfect	

CHAPTER III

RECOMMENDATIONS AND CONCLUSIONS

This thesis presents a framework for a crew station handbook and includes samples of the broader areas which such a handbook should cover. The completed sections of this thesis serve as extensive treatments of the topics covered. The content of the individual sections of Chapters I and II varied with my experience and knowledge.

Chapter I presented the basic tools and concepts for crew station management and control. New contracts for programs involving a Crew Station should contain these essentials in the Contract Statement of Work i.e.: specified general contract effort; a management and control function and organization by the contractor; specifications as definitive in requirements as possible and desireable; provisions for stowage lists, stowage drawings, and serialization of equipment; generation and maintenance of performance and interface specifications and ICD's; and provisions for use of mockups, flight crew participation, and Crew Station Reviews, such as those described.

The experiences gained and problems encountered in areas such as ICD's, as described in the text, serve to emphasize poor tendencies or shortcomings, thereby be of use to those using the handbook. Effective ICD approaches should be considered for similar circumstances. The essentials of the CSR's should be maintained, and specific program management attention and support given to the crew station, as a major subsystem of the S/C.

In Chapter II several aspects of the crew station's general internal layout/configuration were discussed. The crew station engineer should be certain that the crew functional volume requirements are satisfied for the individual task and subsystem operations. It is recommended that the data available on crew functional volumes required for suit donning, sleep stations, and other crew station areas be compiled by NASA, and defined in the handbook. These definitions should include the mission or operational constraints, etc., which may influence the degree of generality of the data. Such qualified data may be better than no data.

For crew size and anthropometry, a review of the anthropometric data and criteria for S/C design is needed and should be undertaken by NASA as soon as possible. Agreement with the U.S. armed forces, who gather and use anthropometric data is recommended to clarify the nomenclature and specific's of measurements taken. If NASA chooses to use Air Force or Navy data in the makeup of its design criteria, then definitive lines of communication should be set up for routine exchange of data. NASA should establish a set of formal anthropometric criteria in a special document instead of the current procedure of updating by letter. The content of this formal document should be made with the contractors and others who use the data.

Measurements should be taken on a range of Apollo flight suits; the number and type measurements should be studied before beginning tests of the actual Apollo suits mobility ranges, reach envelopes, etc., in various suited conditions should also be made, and the data documented. Results of the above should be published, and updated as required, in the handbook.

For crew compartment close out provisions, the data provided should be used as design requirements in S/C design.

I recommend completion of research or tests on the physiological effects of sharp edges, protrusions, etc., so the preliminary criteria in this thesis are substantiated, and otherwise completed. It then should be incorporated into the handbook and used as a design requirement for all S/C contractors.

In later chapters of the handbook outline, as shown in Table 1, more detailed experience and requirements can and should be documented. In human factors, hard and fast requirements are difficult to establish because it is a generally subjective field. I strongly believe, however, that we should document our experiences, problems, etc., in as many areas as possible, even if these cannot be assimilated into requirements. By documenting such experiences and problems insight for those working in the area can be offered. Completion of the chapter on lessons learned should offer valuable examples of generic problems which have occurred in crew station reviews and other experiences. Chapanis in Systems Psychology discusses the reluctance of industrial and government organizations to describe poorly designed systems or failures:

> Consultants to industrial and government organizations often see systems that were badly designed from a human factors standpoint. However, government and industrial security usually discourages disclosure of such cases. Although the motivations are understandable enough, such policies are unfortunate, because one can learn a great deal from failures.
>
> Nevertheless, it is sometimes possible to study systems that have been constructed and put into operation--and have failed. Although this is after-the-fact evidence, it at least provides the human factors scientist with some basis for argument. We need a systematic collection of instances of this kind.[1]

[1] Alphonse Chapanis, "Human Factors in Systems Engineering," in Systems Psychology, Kenyon B. DeGreene, ed. (New York: McGraw-Hill, 1970), pp. 73.

I recommend the compilation of the crew station handbook be completed as outlined in Table 1. This task should be undertaken by personnel with a good deal of applied crew station experience and expertise. This thesis should be distributed to appropriate NASA personnel and contractors, for additions, clarification, or modification. It should also be sent to the Air Force, Navy, and others involved in crew station criteria or handbook preparation.

Furthermore, I recommend this thesis be sent to NASA's Office of Technology Utilization so its contents may be reviewed for applicability from a standpoint of general industrial technology and useage.

BIBLIOGRAPHY

Abstract of Unified Hatch CDR, Phase II. Downey, Calif.: North American Rockwell, Space and Information Systems Division, November 14-15, 1967.

Alexander, Milton; Garrett, J. W.; and Flannery, M. P. Anthropometric Dimensions of Air Force Pressure-Suited Personnel for Workspace and Design Criteria. Ohio: Aerospace Medical Research Laboratory, Wright-Patterson Air Force Base, August, 1969.

Apollo Crew Compartment Design Concept Review No. 2. Downey, Calif.: North American Rockwell, Space and Information Systems Division, April 19-20, 1967.

Apollo Configuration Management Manual. NHB 8040.2. Washington, D. C.: National Aeronautics and Space Administration, January, 1970.

Apollo 8 Mission Report. MSC-PA-R-69-1. Prepared by Mission Evaluation Team Approved by George M. Low, Manager, Apollo Spacecraft Program. Houston, Texas: National Aeronautics and Space Administration, Manned Spacecraft Center, February, 1969.

Apollo 12 Mission Report. MSC-01855. Prepared by Mission Evaluation Team Approved by James A. McDivitt, Manager, Apollo Spacecraft Program. Houston, Texas: National Aeronautics and Space Administration, Manned Spacecraft Center, March, 1970.

Apollo 14 Mission Report. MSC-04112. Prepared by Mission Evaluation Team Approved by James A. McDivitt, Manager, Apollo Spacecraft Program. Houston, Texas: National Aeronautics and Space Administration, Manned Spacecraft Center, May, 1971.

Apollo Operations Handbook, Block II Spacecraft. Vol. I: Spacecraft Description. Apollo Document SID 66-1508 SM2a-03-Block II-1. Revised. Downey, Calif.: North American Rockwell, Space and Information Systems Division, October 15, 1970.

Apollo Operations Handbook, Lunar Module, LM-6 and Subsequent. Vol. I: Subsystems Data. Apollo Document LMA 790-3-LM6 and Subsequent. Bethpage, N. Y.: Grumman Aerospace Corporation, NASA Contract NAS 9-1100, September 15, 1970.

Apollo Program CSM J-Series Missions Integration Plan. SID 69-430, CCA 3355. Downey, Calif.: North American Rockwell, Space and Information Systems Division, NASA Contract NAS 9-150, March 1, 1970.

Apollo Program Specifications, J-Missions. SE 005-001-1. Revision C. Washington, D. C.: National Aeronautics and Space Administration, April 1, 1970.

Apollo Spacecraft Program Configuration Management Manual. SB07-C-001. Houston, Texas: National Aeronautics and Space Administration, Manned Spacecraft Center, December 15, 1967.

Baumeister, Theodore, ed. Standard Handbook for Mechanical Engineers. 7th ed. New York: McGraw-Hill, 1967.

Belayayev, P. I. "Flight of the 'Voskhod 2'." Translated by National Aeronautics and Space Administration. Paper presented at the XVI International Astronautics Congress, Athens, September 13-18, 1965. Washington, D. C.: National Aeronautics and Space Administration, October, 1965.

Bennet, Edward; Degan, James; and Spiegel, Joseph. Human Factors in Technology. New York: McGraw-Hill, 1963.

Chapanis, Alphonse. Man-Machine Engineering. Belmont, Calif.: Wadsworth Publishing Company, 1969.

_____. "Human Factors in Systems Engineering," in Systems Psychology. Edited by Kenyon B. De Greene. New York: McGraw-Hill, 1970.

Command and Service Module End Item Specification. SID 64-1237, Block I, CCA 797. Downey, Calif.: North American Rockwell, Space and Information Systems Division, NASA Contract NAS 9-150, April 18, 1966.

Command and Service Module Technical Specification. SID 63-313, Block I. Revised edition. Downey, Calif.: North American Rockwell, Space and Information Systems Division, NASA Contract 9-150, February 22, 1965.

Command and Service Module/Lunar Module Operational Data Book. Vol. IV: EMU Data Book. SNA-8-D-027. Revision 2. July 7, 1971.

"Commanders Hammock Modification." Configuration Control Board Meeting RECP No. 0L0054A. Houston, Texas: National Aeronautics and Space Administration, Manned Spacecraft Center, January 11, 1970.

"Contract End Item Detail Specification (Prime Equipment), Performance/Design and Product Configuration Requirements, CEI 3001B, Specification No. CP 3001, A7LB Pressure Garment Assembly with Integrated Thermal Meteroid Garment for Apollo Extravehicular Mobility Unit." Revision A. Dover, Del.: ILC Industries, NASA Contract 9-6100, January 30, 1970.

Cooper, Gordon, Jr. "Astronauts Summary Flight Report," in Mercury Project Summary Including Results of the Fourth Manned Orbital Flight May 15 and 16, 1963. NASA SP-45, Project Mercury. Houston, Texas: National Aeronautics and Space Administration, Manned Spacecraft Center, Part 20, October, 1963.

"Crew Integration Plan for Skylab." Prepared by Crew Station Branch, Flight Crew Support Division. Revision A. Houston, Texas: National Aeronautics and Space Administration, Manned Spacecraft Center, October, 1970.

Crew Stations and Passengers Accommodations Handbook. AFSC DH-2-2. Revised edition. Ohio: Air Force Systems Command, Wright-Patterson Air Force Base, May 1, 1971.

Damon A. "Effect of Flying Clothing on Body Measurements of Army Air Force Flyers." Report ENG-49-695-32. Ohio: Aerospace Medical Research Laboratory, Wright-Patterson Air Force Base, 1943.

Davenport, E. W.; Congdon, S. P.; and Pierce, B. F. "The Minimum Volumetric Requirements of Man in Space," Proceedings of American Institute of Aeronautics and Astronautics, Summer Meeting. Los Angeles, Calif.: June 17-20, 1961.

Design Standard Bulletin. Serial DS-79. Washington, D. C.: National Aeronautics and Space Administration, June 6, 1969.

"Details of the Flight of the 'Vostok'." Translated by J. W. Palmer from Pravda. London: Royal Aircraft Establishment, May, 1961.

Domey, Richard D., and McFarland, Rosse A. "The Operator and Vehicle Design," in Edward Bennett, et al., Human Factors in Technology. New York: McGraw-Hill, 1963.

Dreyfuss, Henry. Designing for People. New York: Paragraphic Books, 1967.

Duntley, Seibert A., et al. "Experiment S-8/D-13, Visual Acuity and Astronaut Visibility," Gemini Midprogram Conference Report. Part II: Experiments. Houston, Texas: National Aeronautics and Space Administration, Manned Spacecraft Center, February 23-25, 1966.

Elements of Design Review for Space Systems. NASA SP-6502. Washington, D. C.: National Aeronautics and Space Administration, Office of Technology Utilization, 1967.

Fraser, T. M. "An Overview of Confinement as a Factor in Manned Spaceflights," Proceedings of the NASA Symposium on the Effects of Confinement on Long Duration Manned Spaceflights. Washington, D. C.: National Aeronautics and Space Administration, Office of Manned Space Flight, November 17, 1966.

_____. "Confinement and Free Volume Requirements," Space and Life Sciences, 1 (1968), pp. 428-66.

_____. "Intangibles of Habitability During Long Duration Space Missions," NASA-CR-1084. Washington, D. C.: National Aeronautics and Space Administration, June, 1968.

_____. "The Effects of Confinement as a Factor in Manned Space Flight," NASA-CR-511. Washington, D. C.: National Aeronautics and Space Administration, July, 1966.

Gatland, Kenneth. Manned Spacecraft. The Pocket Encyclopedia of Spaceflight in Color. New York: Macmillan, 1967.

Hertzberg, H. T. E. "Dynamic Anthropometry of Working Positions," Human Factors, 2, 4 (August 1960), 147-55.

_____. "Some Contributions of Applied Physical Anthropology to Human Engineering," WADD TR 60-19. Ohio: Wright Air Development Center, Wright-Patterson Air Force Base, September, 1954.

_____; Daniels, G. S.; and Churchill, E. Anthropometry of Flying Personnel-1950. Technical Report 52-321. Ohio: Wright Air Development Center, Wright-Patterson Air Force Base, September, 1954.

Human Engineering Design Criteria for Military Systems, Equipment and Facilities. Military Standard MIL-STD-1472, Washington, D. C.: Government Printing Office, March 29, 1968.

Human Engineering Design Requirements for AAP Experiments. Revision A. Huntsville, Ala.: George C. Marshall Space Flight Center, February 28, 1969.

Human Engineering Requirements for Military Systems, Equipment, and Facilities. Military Specification MIL-H-46855, Washington, D. C.: Government Printing Office, March 29, 1968.

Kubis, Joseph F. "Habitability: General Principles and Applications to Space Vehicles," Proceedings of Second International Symposium on Basic Environmental Problems of Man in Space, Paris, June 14-18, 1965.

Loftus, J. P., Jr., and Bond, Robert L. "Crew Tasks and Training," Lunar Landing Symposium. Houston, Texas: National Aeronautics and Space Administration, Manned Spacecraft Center, 1966.

Loftus, Joseph P., Jr.; Patton, Rollin M.; and Bond, Robert L. "Crew Functions, United States Manned Spacecraft Program." Houston, Texas: National Aeronautics and Space Administration, Manned Spacecraft Center, in press 1971.

Lunar Module Data Book. Volume II: Subsystem Performance Data-ECS. SNA-8-D-027II. Revision 2, Amendment 70, LED-540-54. Bethpage, N. Y.: Grumman Aerospace Corporation, NASA Contract NAS 9-1100, June 9, 1970.

Lunar Module Performance and Interface Specification, Block II. SID 62-1244C. Downey, Calif.: North American Rockwell, Space and Information Systems Division, NASA Contract NAS 9-150, July 15, 1968.

Machel, R. M., et al. "Crew Station and Extravehicular Equipment," in Gemini Midprogram Conference. Houston, Texas: National Aeronautics and Space Administration, Manned Spacecraft Center, 1966.

McCormick, Ernest J. Human Factors Engineering. 3rd ed. New York: McGraw-Hill, 1970.

Malik, P. W., and Souris, G. A. Project Gemini, A Technical Summary. NASA CR 1106. Houston, Texas: National Aeronautics and Space Administration, Manned Spacecraft Center, NASA Contract 9-170, June, 1968.

Meister, David. Human Factors: Theory and Practice. New York: Wiley-Interscience, 1971.

_____; Rabideau, Gerald F. Human Factors Evaluation in System Development. New York: John Wiley & Sons, 1965.

Moran, J. A., and Tiller, P. R. "Investigation of Aerospace Vehicle Crew Station Criteria: Final Report." Ohio: Air Flight Dynamics Laboratory, Wright-Patterson Air Force Base, July, 1964.

Morgan, C. T., et al. Human Engineering Guide to Equipment Design. New York: McGraw-Hill, 1963.

North, W. J. "Crew Station Design and Operation," in Manned Spacecraft Engineering Design and Operation, eds. Paul E. Purser, Maxime A. Faget, and Norman F. Smith. New York: Fairchild Publications, 1964.

"Performance and Interface Specification for LEM Excursion Module, Government Furnished Crew Equipment," LSP-340-8. Bethpage, N. Y.: Grumman Aerospace Corporation, May, 1966.

Personnel Subsystems Handbook. AFSC DH-1-3. Revised ed. Ohio: Air Force Systems Command, Wright-Patterson Air Force Base, January 1, 1970.

Rogers, Jon G. "Simulation in the Development of Space Hardware," Human Factors Society Bulletin, XIII, 1 (January 1970).

Roth, E. M., ed. Compendium of Human Responses to the Aerospace Environment. NASA CR-1205, Vol. III. Washington, D. C.: National Aeronautics and Space Administration, November, 1968.

Shelton, William. Soviet Space Exploration, The First Decade. New York: Washington Square Press, 1968.

Skylab Operations Handbook. Vol. I: Command and Service Description. SID 69-248-1 SM2a-03-Skylab-1. Downey, Calif.: North American Rockwell, Space and Information Systems Division, NASA Contract NAS 9-150, S/A 500, March 15, 1971.

Skylab Program Configuration Management Plan. MSC-01160A. Houston, Texas: National Aeronautics and Space Administration, Manned Spacecraft Center, Skylab Program Office, October 1, 1970.

Standards and Criteria. Vol. II: Preliminary Technical Data for Earth-Orbit Station. Washington, D. C.: National Aeronautics and Space Administration, November 7, 1966.

Standard Human Engineering Design Criteria. MSFC-STD-267A. Huntsville, Ala.: George C. Marshall Space Flight Center, September 23, 1966.

U. S., Senate, Committee on Aeronautical and Space Sciences. Soviet Space Programs, 1962-1965: Goals and Purposes, Achievements, Plans, and International Implications. Washington, D. C.: Government Printing Office, December 30, 1966.

Van Dyke, W. J. "Performance/Design and Product Configuration Requirements, Extravehicular Mobility Unit for Apollo Block II Missions, Master End Item Specification," NASA-EMU-CSD-A-096. Houston, Texas: National Aeronautics and Space Administration, Manned Spacecraft Center, January, 1966.

Viktozov, D. In Open Space--Voskhod-2 Spacecraft Design. Translation of "V Otkrvtom Kosmose--Ustroystvo Korabyla, 'Voskhod-2'," Aviatsiya i Kosmonavtika, Vol. 48 (1965), pp. 17-19. NASA TT-F-10, 216. Washington, D. C.: National Aeronautics and Space Administration, June, 1966.

Webb, Paul, ed. Bioastronautics Data Book. NASA SP-3006. Washington, D. C.: National Aeronautics and Space Administration, Scientific and Technical Information Division, 1964.

Woodson, Wesley, E., and Conover, Donald W. Human Engineering Guide for Equipment Designers. 3rd ed. Berkeley: University of California Press, 1970.

Wulfeck, J. W., et al. Vision in Military Aviation. WADC Technical Report 58-399, Astia Document No. AD 207780. Ohio: Air Research and Development Command, Wright-Patterson Air Force Base, November, 1958.

Zvezda, Krasnaia. "On the Road to Orbital Stations," Translated by Morris D. Friedman. TASS Report No. 269, November 17, 1968.

APPENDIX A

PORTIONS OF APOLLO 9 MISSION AS 504, CM 104/LM 3 STOWAGE LIST

NATIONAL AERONAUTICS AND SPACE ADMINISTRATION

APOLLO STOWAGE LIST
MISSION AS 504 CM 104/LM-3

APOLLO 9

MARCH 4, 1969

FINAL RELEASE

THIS ISSUE DOCUMENTS THE AS-FLOWN CONFIGURATION.

FOR INFORMATION CONTACT ASPO, GFE OFFICE
PF3/J. W. THOMPSON 483-5411

MANNED SPACECRAFT CENTER HOUSTON, TEXAS

308

INFORMATION SHEET FOR COMPOSITE APOLLO STOWAGE LIST

The attached composite Apollo Stowage List is a complete CM/LM Crew Equipment Stowage List compiled for the appropriate Apollo mission identified on the document.

To provide understanding of the complete document, the following explanation is offered. The Apollo Stowage List is broken down as follows:

LIST A - CM LAUNCH STOWAGE LIST

Sec 1 - Stowed Operational GFE
Sec 2 - Crew Apparel
Sec 3 - Stowed Operational CFE
Sec 4 - Stowed Experimental GFE

LIST B - LM EARTH LAUNCH STOWAGE LIST

Sec 1 - Stowed Operational GFE
Sec 2 - Not Applicable
Sec 3 - Stowed Operational CFE
Sec 4 - Stowed Experimental GFE

LIST C - CM-LM TRANSFER LIST

Sec 1 - Stowed Operational GFE
Sec 2 - Crew Apparel
Sec 3 - Stowed Operational CFE
Sec 4 - Stowed Experimental GFE

LIST D - LM LUNAR LAUNCH STOWAGE LIST

Sec 1 - Stowed Operational GFE
Sec. 2 - Crew Apparel
Sec 3 - Stowed Operational CFE
Sec 4 - Stowed Experimental GFE

LIST E - LM-CM TRANSFER LIST

Sec 1 - Stowed Operational GFE
Sec 2 - Crew Apparel
Sec 3 - Stowed Operational CFE
Sec 4 - Stowed Experimental GFE

LIST F - CM ENTRY STOWAGE LIST

Sec 1 - Stowed Operational GFE
Sec 2 - Crew Apparel
Sec 3 - Stowed Operational CFE
Sec 4 - Stowed Experimental GFE

Stowage List item number identifiers are assigned using appropriate numerical numbers preceeded by a responsible MSC division or Contractor code.

SUPPLYING DIVISION CODE

A - Flight Crew Support Division
B - Crew Systems Division
C - Biomedical Research Office
D - Space Physics Division
E - Instr & Elect Sys Div
F - Structures & Mechanics Div
G - Lunar Surface Project Office
H - Guidance & Control Division
I - Not used
J - Earth Resources Div
O - Other (Contractors)

NOTE: If unit weight stated is estimated, * will appear ahead of weight entry.

ITEM NUMBER CODE

Sec I
0100 to 0199 CM Stowed Operational GFE
1000 to 1999 LM Stowed Operational GFE

Sec II
0200 to 0299 Crew Apparel

Sec III
0300 to 0399) CM Stowed Operational CFE
6300 to 6399)
3000 to 3999 LM Stowed Operational CFE

Sec IV
0400 to 0499 CM Stowed Experimental GFE
4000 to 4999 LM Stowed Experimental GFE

COMAT STATUS CODE

A - Approved
P - Pending Approval
O - Open (no COMAT submitted)
M - Metal (no COMAT required)
W - Waived

MISSION AS 504 CM 104 AND LM-3 DATE 03-04-69

LIST A CM LAUNCH STOWAGE LIST

SEC 1 STOWED OPERATIONAL GFE

ITEM NUMBER	PART NUMBER	NOMENCLATURE	STOWAGE LOCATION	UNIT WEIGHT	QTY/ SC	GFE/ CFE	COMAT
A 0100.	SEB33100100-203	CAMERA,16MM DATA AQUISITION	1-B8/1-B3	1.70	2		O
A 0101.	SEB33100125-205	MAGAZINE,16MM DATA ACQUISITION	5-A7/1-B3/5-B8 3-16MM FILM BAGS(A7)	.97	14		A
A 0102.	SEB33100023-204	LENS,18MM	B3	.56	1		A
A 0103.	SEB33100078-202	LENS,75MM	B3	.53	1		A
A 0104.	SEB33100038-301	POWER CABLE,DAC	1-B8/1-B3	.23	2		A
A 0105.	SEB33100056-208	LENS,5MM WITH COVER	B3	.68	2		A
A 0106.	SEB33100051-204	MIRROR,RIGHT ANGLE 16MM CAMERA	B3	.16	1		A
A 0107.	SEB33100029-205	CAMERA,70MM HASSELBLAD W/80MM LENS	B3	1.90	1		A
A 0108.	SEB33100068-203	MAG,70MM FILM CASSETTE TYPE	4-A7/1-B3	1.59	5		A

LIST A CM LAUNCH STOWAGE LIST

SEC 2 CREW APPAREL

ITEM NUMBER	PART NUMBER	NOMENCLATURE	STOWAGE LOCATION	UNIT WEIGHT	QTY/ SC	GFE/ CFE	COMAT
A 0200.	SEB12100033-201	SUNGLASSES	SUNGLASS POUCH	.06	3		A
A 0201.	SEB12100034-203	POUCH,SUNGLASSES	ON PGA	.05	3		A
A 0202.	SEB12100039-002	CHRONOGRAPH	ON WATCHBAND	.13	3		A
A 0203.	SEB12100030-202	WATCH BAND	ON PGA	0.02	3		A
A 0204.	SEB12100051-204	PENS,DATA RECORDING	ON CREW	.05	3		A
A 0205.	SEB12100082-301	PEN,MARKER	ON CREW		3		
A 0206.	SEB12100081-301	PENCIL	ON CREW		4		
A 0207.	SEB33100047-302	SLIDERULE	ON CREW		1		
A 0208.	SEB12100085-301	BAG,MOTION SICKNESS	PGA POCKET		3		

LIST A CM LAUNCH STOWAGE LIST

SEC 3 STOWED OPERATIONAL CFE

ITEM NUMBER	PART NUMBER	NOMENCLATURE	STOWAGE LOCATION	UNIT WEIGHT	QTY/ SC	GFE/ CFE	COMAT
0 0307. 3	V36-601415	WRENCH,END-TOOL F			1	C	
0 0307. 4	V16-601531	TORQUE SET DRIVER,TOOL R			1	C	
0 0307. 5	V36-601410	DRIVER,U JOINT-TOOL V			1	C	
0 0307. 6	V36-601311-21	TETHER			1	C	
0 0307. 7	V36-601417-101	POUCH			1	C	
0 0307. 8	V36-553C07	JACK SCREW			3	C	
0 0307. 9	V16-601133-21	DRIVER,TOOL L			1	C	
0 0308.	V36-601421	BOX,SANITATION SUPPLY STOWAGE-AFT	R10	1.70	1	C	
0 0309.	V36-782031	BOX,EVA CAMERA EQUIP STOWAGE-FWD	R10		1	C	

LIST B LM LAUNCH STOWAGE LIST

SEC 1 STOWED OPERATIONAL GFE

ITEM NUMBER	PART NUMBER	NOMENCLATURE	STOWAGE LOCATION	UNIT WEIGHT	QTY/ SC	GFE/ CFE	COMAT
B 1013.	A6L-201C00-09	EV VISOR ASSY.	IN HELMET STOWAGE BAG	4.40	2		O
B 1014.	A7L-203C25-01	GLOVES,EV	IN HELMET STOWAGE BAG	2.69	2		A
B 1015.	A7L-203C25-02	GLOVES,EV	IN HELMET STOWAGE BAG	2.69	2		A
B 1016.	A6L-503000-05	KIT,EMU MAINTENANCE	IN CDRS HELMET STOWAGE BAG	.40	1		A
B 1017.	A6L-505C00-02	FITTING,PURGE	IN THE HELMET STOWAGE BAG	.55	2		A
B 1021.	SV723426-1	ATTACH STRAP,OPS/PGA	UNIV. TV BRKT CONT. ON LMP COLD RAILS		1		
B 1022.	SV723409-1	ATTACH STRAP,OPS/PGA	UNIV. TV BRKT CONT. ON LMP COLD RAILS		1		
B 1023.	SEB12100084-301	EYEPATCH	FLIGHT DATA FILE		1		
C 1000.	14-0121	LM FOOD ASSY(2MAN DAYS)	2 MAN DAYS (3 PKG A, * B, + C) IN RHSSC	3.60	1		A

LIST C CM TO LM TRANSFER LIST

SEC 2 CREW APPAREL

ITEM NUMBER	PART NUMBER	NOMENCLATURE	STOWAGE LOCATION	UNIT WEIGHT	QTY/ SC	GFE/ CFE	COMAT
B 0204. 1	SHB42100121-201 OR*	*-202 HARNESS,AXILLARY			2		
B 0204. 2	SHB42100120-203 OR*	HARNESS,STERNAL *-204			2		
B 0204. 4	104230/103080	CONDITIONER,IMPEDANCE			2		A
B 0204. 5	104220/103070	CONDITIONER,EKG SIGNAL			2		A
B 0204. 6	104240/103110 OR	104840 POWER SUPPLY, DC-DC CONV.			2		A
B 0205.	SDB42100059-202	SCISSORS	ON PGA	.53	1		A
B 0206.	14-0108-02	UCTA	ON CREW	.43	2		A
B 0207.	ACR-FA-5	PENLIGHTS	ON PGA	.34	2		A
B 0208.	SEB13100084-202	ASSY,BIO BELT	ON CREW	.50	2		A
C 0200.	N/A	CEPACOL	16-CDR PGA/16-LMP PGA		32		

MISSION AS 504 CM 104 AND LM-3 DATE 03-04-69

LIST E LM TO CM TRANSFER LIST

SEC 1 STOWED OPERATIONAL GFE

ITEM NUMBER	PART NUMBER	NOMENCLATURE	STOWAGE LOCATION	UNIT WEIGHT	QTY/ SC	GFE/ CFE	COMAT
A 1005. 1	SKB32100014-301	CHECKLIST,LM EVA	R2		1		
A 1005. 3	SKB32100015-301	CHECKLIST,LM RENDEZVOUS ACTIVATION	R1		1		
A 1005. 5	SKB32100017-301	PROCEDURES,LMP RENDEZVOU	R3		1		
B 0111.	A6L-400000-09	GARMET,LIQUID COOLING	ON CREW	4.60	1		A
B 0118.	A6L-501000-02	FECAL CONTAINMENT SUBSYSTEM	ON CREW	.50	2		A
D 0100.	RFB-OP-4-2-001	METER,RADIATION SURVEY	G+N SIGNAL COND. PANEL LEB ON BRKT	1.58	1		A
D 1000.	SEB12100045-302	DOSIMETER,PASSIVE RADIATION	TAPED TO FILM MAG-A5		1		

LIST F CM ENTRY STOWAGE LIST

SEC 1 STOWED OPERATIONAL GFE

ITEM NUMBER	PART NUMBER	NOMENCLATURE	STOWAGE LOCATION	UNIT WEIGHT	QTY/ SC	GFE/ CFE	COMAT
A 0100.	SEB33100100-203	CAMERA,16MM DATA AQUISITION	1-B8/1-B3	1.70	2		
A 0101.	SEB33100125-205	MAGAZINE,16MM DATA ACQUISITION	5-A7/1-B3/5-B8 3-16MM FILM BAGS(A7)	.97	14		A
A 0102.	SEB33100023-204	LENS,18MM	B3	.56	1		A
A 0103.	SEB33100078-202	LENS,75MM	B3	.53	1		A
A 0104.	SEB33100038-301	POWER CABLE,DAC	1-B8/1-B3	.26	2		A
A 0105.	SEB33100056-208	LENS,5MM WITH COVER	B3	.68	2		A
A 0106.	SEB33100051-204	MIRROR,RIGHT ANGLE 16MM CAMERA	B3	.16	1		A
A 0107.	SEB33100029-205	CAMERA,70MM HASSELBLAD W/80MM LENS	B3	1.90	1		A
A 0108.	SEB33100068-203	MAG,70MM FILM CASSETTE TYPE	4-A7/1-B3	1.59	5		A

APPENDIX B

SAMPLE STOWAGE LIST REVISION NOTICE

APOLLO STOWAGE LIST REVISION NOTICE
MISSION AS 504 CM 104/LM-3

MARCH 4, 1969

FOR INFORMATION CONTACT ASPO, GFE OFFICE
PF3/J. W. THOMPSON 483-5411

MANNED SPACECRAFT CENTER HOUSTON, TEXAS

LIST A CM LAUNCH STOWAGE LIST

SEC 1 STOWED OPERATIONAL GFE

ITEM NUMBER	PART NUMBER	NOMENCLATURE	STOWAGE LOCATION	UNIT WEIGHT	QTY/ SC	GFE/ CFE	COMAT	CHANGE-REASON	CHG-DATE
*A 0107.	SEB33100029-205	CAMERA,70MM HASSELBLAD W/80MM LENS	B3	1.90	1		A	REMOVED OPT P/N-206 TO DOCUMENT AS FLOWN P/N	3-04-69
*A 0114.	SEB12100018-202	KIT,PILOTS PREFERENCE	3-A8/3-R2/1-A1	.50	7		A	S/LOC CHG FROM 3-A8 4-R2 -CCBD 9R138 APV 2-27-69	3-04-69
*A 0116.18	SKB32100011-301	EVA	R2		1		A	S/LOC CHG FROM R3 - TO CORRECT ERROR	3-04-69
*B 0117.	BW-1043-003	COVERALL ASSY,IN FLIGHT	A8	3.27	3		A	REMOVED OPT P/N-004- TO DOCUMENT AS FLOWN P/N	3-04-69
*B 0117. 1	BW-1043-06	ASSY,JACKET			3		A	REMOVED OPT P/N-07 - TO DOCUMENT AS FLOWN P/N	3-04-69
*B 0118.	A6L-501000-02	SUBSYSTEM,FECAL CONTAINMENT	A8	.34	2		A	REMOVED OPT P/N-03 (XFRD TO B0118.1) QTY CHG FROM 3 TO DOCUMENT AS FLOWN P/N	3-04-69
*B 0118. 1	A6L-501000-03	SUBSYSTEM,FECAL CONTAINMENT	A8		1			NEW ITEM-XFRD FROM ITEM B0118 -TO DOCUMENT AS FLOWN PN	3-04-69
*E 0108.	75101-126-03	EARTUBES,UNIVERSAL	IN FLIGHT COVERALL GARMENTS	.01	2		A	QTY CHG FROM 1-CREW PREFERENCE	3-04-69

MISSION AS 504 CM 104 AND LM-3

LIST A CM LAUNCH STOWAGE LIST

SEC 2 CREW APPAREL

ITEM NUMBER	PART NUMBER	NOMENCLATURE	STOWAGE LOCATION	UNIT WEIGHT	QTY/ SC	GFE/ CFE	COMAT	CHANGE-REASON	CHG-DATE
*A 0200.	SEB12100033-201	SUNGLASSES	SUNGLASS POUCH	.06	3		A	REMOVED OPT P/N-001 TO DOCUMENT AS FLOWN P/N	3-04-69
*A 0202.	SEB12100039-002	CHRONOGRAPH	ON WATCHBAND	.13	3		A	REMOVED OPT P/N-001 TO DOCUMENT AS FLOWN P/N	3-04-69
*A 0206.	SEB12100081-301	PENCIL	ON CREW		4			QTY CHG FROM 3 CCBD 9R144 APV 3-3	3-04-69
*A 0209.	N/A	VELCRO,NYLON PRESSURE SENSITIVE(1X12)	CDR PGA		1			NEW ITEM-CCBD 9R138 APV 2-27-69	3-04-69
*B 0200.	A7L-100000-54AND-57	GARMENT ASSY.,PRESSURE EV(PGA)	CREW AT LAUNCH STOWED IN PGA CONT.	* 47.36	2		A	P/N CHG FROM-TBD TO DOCUMENT AS FLOWN P/N	3-04-69
*B 0200. 7	A7L-100002-23	SUIT,TORSO LIMB	PGA CONTAINER AFTER LAUNCH		2			P/N CHG FROM-TBD TO DOCUMENT AS FLOWN P/N	3-04-69
*B 0201.	A7L-100000-56	GARMENT ASSY.,PRESSURE IV(PGA)	CREW AT LAUNCH STOWED IN PGA CONT.	* 35.61	1		A	P/N CHG FROM-TBD TO DOCUMENT AS FLWON P/N	3-04-69
*B 0201. 7	A7L-100004-08	SUIT,TORSO LIMB	PGA CONTAINER AFTER LAUNCH		1			P/N CHG FROM-TBD TO DOCUMENT AS FLOWN P/N	3-04-69
*C 0200.	N/A	CEPACOL	16-CDR PGA/16-LMP PGA		32			NEW ITEM-CCBD 9R144 3-3-69	3-04-69

APPENDIX C

PORTIONS OF SKYLAB STOWAGE LIST

Skylab

STOWAGE LIST

OPERATIONAL AND EXPERIMENTAL GFE/CFE

SKYLAB MISSIONS 1, 1/2, 1/3, 1/4

MANNED SPACECRAFT CENTER

HOUSTON, TEXAS

GEORGE C. MARSHALL SPACE FLIGHT CENTER

HUNTSVILLE, ALABAMA

National Aeronautics and Space Administration

NASA

The Data Format of this Document is Intended to Highlight:

- Weight Data Status and Comparisons by Presenting Both Specification Weights and Estimated or Actual Weights
- Quantities Launched and Stowage Locations - By Module
- Inflight Transfer Quantities and Stowage Locations - By Module
- Deactivation Stowage Locations and Quantities - By Module - as well as Command Module Return Stowage Configuration
- Cumulative Quantity Totals - By Module - For all Stowed Items during Launch, Active Orbit, Inactive Orbit, and Return

OPERATIONAL AND EXPERIMENTAL GFE/CFE STOWAGE LIST

ITEM NO.	CAT.	NOMENCLATURE / PART NUMBER	ITEM SUPPL BY	UNIT SPEC WEIGHT (LB)	UNIT EST/ACT WEIGHT/CODE (LB)	TOTAL FLIGHT QTY LAUNCH / RETURN	STOWAGE LOCATION SL 1/2 L	SL 1/2 O	SL 1/2 R	SL 1/3 L	SL 1/3 O	SL 1/3 R	SL 1/4 L	SL 1/4 O	SL 1/4 R	REMARKS REFER TO NOTES SECTION
				(DIMENSIONS – INCHES)												
0001.00.00	G-OM	GARMENT, CONSTANT WEAR SEB13100061-208	CSD	(TBD)	0.980	L 60 R 9										
						WS	42									
						CM	3		3	3		3	3		3	OXX ← (3)
							A8		W	A8		W	A8		W	
	(1)					(2)	3			3			3			
							W			W			W			
xxxx.xx.xx	x-xx	xxxxxx. xx-xx		x.xxx (x.xx	x.xxx)	L xx R xx										
						NOB	x									← (5)
						CM	x ABC			x ABC			x ABC			← (4)

(1) THE ITEM CATEGORY USES 3 DIGITS AS FOLLOWS:

x-xx
- S = STOWED
- W = WORN
- M = MIXED, (i.e., SOME STOWED AND SOME WORN OR SOME STOWED AND SOME INSTALLED)
- O = OPERATIONAL
- E = EXPERIMENTAL
- G = GFE
- C = CFE

(2) EXAMPLE OF MULTIPLE USAGE; TOTAL OF 60 LAUNCHED, 42 STOWED IN WS, 3 STOWED (LOCKER A8) AND 3 WORN IN EACH OF THE COMMAND MODULES.

(3) REFERENCE NOTE NUMBER REFERS TO THE NOTE AT THE BOTTOM OF THE PAGE.

NOTES:

·OXX (APPLICABLE NOTE AS REQ'D FOR CLARIFICATION)

X0022

324

SAMPLE FORMAT

SKYLAB PROGRAM

SL–1 SL–1/2 SL–1/3 SL–1/4

OPERATIONAL AND EXPERIMENTAL GFE/CFE STOWAGE LIST

I-SL-002

PAGE

DATE

ITEM NO.	CAT.	NOMENCLATURE / PART NUMBER	ITEM SUPPL BY	UNIT SPEC WEIGHT (LB) / (DIMENSIONS – INCHES)	UNIT EST/ACT WEIGHT/CODE (LB)	TOTAL FLIGHT QTY / LAUNCH RETURN	STOWAGE LOCATION SL 1/2 L	SL 1/2 O	SL 1/2 R	SL 1/3 L	SL 1/3 O	SL 1/3 R	SL 1/4 L	SL 1/4 O	SL 1/4 R	REMARKS / REFER TO NOTES SECTION

(4) PRELIMINARY LOCKER LOCATIONS ARE INDICATED FOR CM STOWED ITEMS. LOCATIONS ARE SUBJECT TO CHANGE WITHOUT CCB APPROVAL; HOWEVER, SCG APPROVAL IS REQUIRED.

(5) "NOT ON BOARD" (NOB) ITEM MISSION REQUIREMENT FOR WHICH STOWAGE PROVISIONS HAVE NOT BEEN ESTABLISHED.

NOTES:

325

X6502

SAMPLE FORMAT

SKYLAB PROGRAM
SL-1 SL-1/2 SL-1/3 SL-1/4
OPERATIONAL AND EXPERIMENTAL GFE/CFE STOWAGE LIST

ITEM NO.	CAT.	NOMENCLATURE / PART NUMBER	ITEM SUPPL BY	UNIT SPEC WEIGHT (LB) / UNIT EST/ACT WEIGHT/CODE (LB) / (DIMENSIONS-INCHES)	TOTAL FLIGHT QTY / LAUNCH RETURN	STOWAGE LOCATION SL 1/2 L	SL 1/2 O	SL 1/2 R	SL 1/3 L	SL 1/3 O	SL 1/3 R	SL 1/4 L	SL 1/4 O	SL 1/4 R	REMARKS / REFER TO NOTES SECTION
0001.00.00	-	CONSTANT WEAR GARMENT	CSD		L R										443
0002.00.00	G-OS	LIQUID COOLING GARMENT A6L-4CC000-14	CSD	5.000 (3.00X12.00X14.00)	L 17 R WS CM	2 U1 3 A8	5 TBD	5 TBD	2 U1 5 A8	12 TBD	12 TBD	2 U1 3 A8	17 TBD	17 TBD	001,002
0008.00.00	G-OS	PRESSURE CONTROL UNIT 132728-01	CSD	13.500 (7.00X11.00X19.00)	L 8 R WS CM	2 D422 2 A8	2 TBD 2 D422	2 TBD 2 D422	2 A8	4 TBD 2 D422	4 TBD 2 D422	2 A8	6 TBD 2 D422	6 TBD 2 D422	
0009.00.00	G-OS	SECONDARY OXYGEN PACK 132730-01	CSD	35.000 (5.50X11.25X15.50)	L 8 R MDA WS CM	1 1 D422 2 A8	1 2 TBD 1 D422	1 2 TBD 1 D422	2 A8	1 4 TBD 1 D422	1 4 TBD 1 D422	2 A8	1 6 TBD 1 D422	1 6 TBD 1 D422	

NOTES:

443 ITEM NUMBER DELETED - TRANSFERRED TO ITEMS 0075.08.00 AND 0080.00.00.
001 TOTAL QTY.FOR EACH MISSION PROVIDES: 2 EVA - PRIME LCG'S.
002 IVA SUITED EXPERIMENTS WILL UTILIZE USED LCG'S FROM EVA.

ITEM NO.	CAT.	NOMENCLATURE / PART NUMBER	ITEM SUPPL BY	UNIT SPEC WEIGHT (LB) / (DIMENSIONS-INCHES)	UNIT EST/ACT WEIGHT/CODE (LB)	TOTAL FLIGHT QTY LAUNCH / RETURN	STOWAGE LOCATION SL 1/2 L	SL 1/2 O	SL 1/2 R	SL 1/3 L	SL 1/3 O	SL 1/3 R	SL 1/4 L	SL 1/4 O	SL 1/4 R	REMARKS REFER TO NOTES SECTION
0208.C0.00	S015	ZERO GRAVITY SINGLE HUMAN CELLS	MR&O			L R										EXPERIMENT
0208.C1.00	C-ES	EXPERIMENT PACKAGE DCHD 3605	MR&O	(6.50X15.50X 9.06)	22.000	L 1 R 1 CM	B6 1		B6 1							061

NOTES:

061 FILM IS INTEGRAL TO EXPERIMENT PACKAGE, AND IS THEREFORE NOT INCLUDED IN FCSD LISTING.

X0022

APPENDIX D

PORTIONS OF NASA MEMORANDA CONTAINING PRELIMINARY STOWAGE LIST INFORMATION

OPTIONAL FORM NO. 10
MAY 1962 EDITION
GSA FPMR (41 CFR) 101-11.6

UNITED STATES GOVERNMENT

Memorandum

TO : Distribution

DATE: May 29, 1969
In reply refer to:
PD8/M1974

FROM : PD8/LM, Crew Compartment Project Engineering

SUBJECT: Preliminary LM stowage list for Apollo lunar extended missions (ALEM)

Reference is made to GAEC final report LRP 39-1, "LM Modification Study for Extended Lunar Staytime," dated April 15, 1969.

A Preliminary Requirements Review meeting for LM-10 and subsequent modifications was held at MSC on May 20, 1969. In response to action assignments at this review, ASPO and FCSD prepared a preliminary crew equipment stowage list to be used by GAEC in the redesign of the LM-10 crew station and descent stage stowage for a 78-hour lunar surface stay-time. This was prepared using the above reference and current LM stowage lists as guidelines.

The preliminary list is enclosed to this memorandum for your review and concurrence. Certain categories of stowage items require prompt MSC decisions in order to finalize requirements so that GAEC may proceed with stowage provisions design. Specifically, concurrence is required in the following areas:

a. Camera Equipment: Number of 16mm and 70mm cameras required and usage planned. Acceptability or unacceptability of ascent stage versus descent stage stowage of cameras and film. Decision as to magazine versus cassette film systems. Feasibility of individual GFE thermal and vacuum protection for film if stowed in descent stage.

b. Waste Management: Requirement for number of urine bags, defecation collection devices, and emesis bags in light of new urine receptacle system and fecal collection receptacle assembly.

c. PLSS/OPS: Statement defining weight growth of these units. An assumption of the modification program is that the volumetric and dimensional stowage interfaces for PLSS and OPS will not change.

d. Medical Kit: Definition of the growth in size and weight.

e. Crew Apparel: Requirements for number of constant wear garments, liquid cooled garments, and flight coveralls.

It is requested that your office review this list and submit recommended changes to ASPO, PD8/Jerry R. Goodman, within one week. Preliminary design review of the LM-10 configuration is scheduled for July 1, 1969. Prompt decisions and inputs to the items requested in this memo will ensure a successful modification program.

Jerry R. Goodman

Jerry R. Goodman

Enclosure

PD8:JRGoodman:(FWParker):jgw 5-29-69

George W. Abbey and C. H. Bolender have reviewed this memorandum and concur.

Basic Assumptions for Extended Missions

1. Retain TV camera system in the descent stage.

2. The 16mm camera can operationally record sequences of geological expeditions on the lunar surface for engineering purposes.

3. The first installed primary ECS cannister will suffice through the the first EVA. One spare in the ascent stage, remaining spares in the descent stage.

4. Standard geological tools stowed in the MESA have been retained.

5. Additional scientific payload is not presently defined.

6. Certain GFE contingency items are required to enhance total mission success.

7. The secondary LiOH cannister in the LM ECS will not be considered in support of planned EVA.

8. EVA Sequence - on a day involving LM flight maneuvers, only a single EVA excursion of three hours maximum duration will be planned. Two short EVA, i.e., three hours, excursions or one long, i.e., five hours excursion, will be considered for days not involving LM flight maneuvers. All EVA's will be planned with both crewmen descending to the surface.

9. The life support unit to be considered by GAEC will be the present PLSS/OPS combination with modifications to PLSS which will extend usable lifetime.

10. The LM must be capable of supporting a maximum of 11 individual PLSS recharges, which is consistent with six two-man EVA excursions and final recharge of one PLSS for orbital contingency transfer where an OFS was used on the final excursion.

11. The LM must be capable of supporting a maximum of seven cabin repressurizations which is consistent with six EVA's and an equipment jettison.

12. The LM must be capable of stowing the Constant Volume Suit in the ascent stage at earth launch.

STOWAGE CATEGORIES

Stowage items in the ALEM basic list are identified in one of three categories as follows:

A: Items with known requirement and known configuration.

B: Items with known requirement and unknown configuration.

C: Requirement still in coordination.

All items are to be stowed at earth launch unless otherwise indicated in Remarks Column.

STOWED OPERATIONAL GFE

ITEM	QUANTITY	STOWAGE CATEGORY	PART NUMBER	NOMENCLATURE	LOCATION	REMARKS
1	2	1-A; 1-C	SEB 33100100-205 -206	16mm Data Acquisition Cameras	1-R/H window bracket 1-D/S	
2	4	C	TBD	16mm Camera Battery Package	D/S	
3A	18	B	SEB 33100125-203 -205	16mm Magazines	16 D/S 2 A/S	Magazines may need a pressurized container.
3B	8	B	TBD	16mm Cassette (with film)	D/S	Items 3B, 3C, 3D may replace all or part of 3A.
3C	2	B	TBD	16mm Cassette (empty)	D/S	Items 3B, 3C, 3D may replace all or part of 3A.
3D	2	B	TBD	Film Transporter	D/S	Items 3B, 3C, 3D may replace all or part of 3A.
4	1	A	SEB 33100010	10mm Lens for 16MM Camera	A/S	
5	2	1-A; 1-C	SEB 33100019	75mm Lens for 16mm Camera	1-A/S 1-D/S	

STOWED OPERATIONAL GFE

ITEM	QUANTITY	STOWAGE CATEGORY	PART NUMBER	NOMENCLATURE	LOCATION	REMARKS
54	4	2A; 2C	TBD	Liquid Cooling Garment	A/S	2 transfer, 2 stowed, 1 extra LCG for each crewman for contingency.
55	3	C	TBD	Light Weight Headsets	2 transfer 2 A/S	1 extra headset for contingency.
56	2	B	TBD	Constant Volume Suit	A/S	
57	9	C	TBD	Facial Wet Wipes	A/S	
58	2	C	SEB 33100291	Tether, EVA retractable	A/S	
59	9	C	TBD	PGA Wipe Cloths		
60	2	C	SEB 42100086-203	Tissue Dispenser		
61	1	B	TBD	Vacuum Brush		
62	4	C	140111-01	Defecation Collection Device	A/S	
63	1	C	TBD	UCTA Adapter	A/S	
64	2	C	TBD	UCTA Clamps	Transfer Item	

OPTIONAL FORM NO. 10
MAY 1962 EDITION
GSA FPMR (41 CFR) 101-11.6

UNITED STATES GOVERNMENT

Memorandum

NASA Manned Spacecraft Center

TO : See list attached

DATE: JUL 31 1969

In reply refer to:
PD8/M1988

FROM : PA/Manager for Lunar Landing Operations
Apollo Spacecraft Program

SUBJECT: LMMP stowage list and GFE interfaces

Enclosed for your information, review, and action, as noted, is a copy of the LMMP stowage list for LM-10 and subs (enclosure 1). This list represents the best available definition of crew compartment provisions and LM ascent and descent stage stowage requirements. GAC is currently utilizing this list as the baseline for the design of LM-10 and subs which will be presented to NASA at the LMMP CDR scheduled for approximately September 1, 1969. GAC has been directed to utilize the GFE design interface criteria provided by enclosure 2. A list of specific subsystem interface criteria or information for which verification or confirmation of validity is required is provided in enclosure 3.

You are requested to review this list and the design criteria, as soon as possible, and submit any comments, corrections, or proposed changes to PD8/Crew Compartment Project Engineering Group (X5121). Coordination of GFE to CFE interfaces, S/C crew compartment requirements, and direction on these interfaces and requirements to the contractor for LMMP shall be coordinated through the ASPO Crew Compartment Project Engineering Group (PD8). Subsequent to the CDR this list will be published and maintained by the ASPO GFE Office (PF3) in a manner similar to the current Apollo stowage lists.

You are also requested to supply (for use in the CDR mockup) the best available representative GFE for each of the items listed, as per your organizational responsibility. Hardware should be delivered to GAC by Aug. 15 or earlier, if possible. Hardware support shall be coordinated through the GFE Office (PF3/J. Thompson, X6237).

James A. McDivitt

James A. McDivitt

Enclosures (3)

PD8:JRGoodman:jw 7/30/69

Buy U.S. Savings Bonds Regularly on the Payroll Savings Plan

List B (LM Earth Launch) STOWED OPERATIONAL GFE

ITEM	QTY	UNIT WT	TOTAL WT	PART NUMBER	NOMENCLATURE	LOCATION	REMARKS
1	1	1.7	1.7	SEB 33100100-205 Or-206	16mm Data Acquisition Camera	RH Window Bracket	
2	2	*1.0	2.0	SEB 33100125-203 Or-205	16mm Magazines (140 ft)	A/S	Magazines will be in sealed bags.
3	1	*2.0	2.0	TBD	16mm Magazines (400 ft)	A/S	Magazines will be in sealed bags.
4	1	0.6	0.6	SEB 33100010	10mm Lens (for 16mm camera)	A/S	
5	2	4.9	9.8	SEB 33100040	Camera, Lunar Surface Electric Hasselblad, with 60mm Lens	1 A/S 1 D/S	
6	2	0.2	0.4	SEB 33100046-301	Protective Cover, Reseau	On Item 5	
7	2	0.5	1.0	SEB 33100293-301	Handle, Electric Hasselblad Camera	1 A/S 1 D/S	
8	2	0.2	0.4	SEB 33100294-301	Trigger, Electric Hasselblad Camera	1 A/S 1 D/S	
9	10	1.4	14.0	SEB 33100082-207	Magazines, Lunar Surface Hasselblad	8 D/S 2A/S	Magazines will be in a sealed bag.
10	1	*9.3	9.3	SKB 32100116	Flight Data File Assembly	A/S	Allow For 30% Volume growth.

List B (LM Earth Launch)

STOWED EXPERIMENTAL GFE
(see note 1 on Scientific Equipment)

p.

ITEM	QTY	UNIT WT	TOTAL WT	PART NUMBER	NOMENCLATURE	LOCATION	REMARKS
127	1	*133.0	133.0	TBD	Pallet Assembly No. 1	D/S	
128	1	*133.0	133.0	TBD	Pallet Assembly No. 2	D/S	
129	1	*15.0	15.0	TBD	Stereo Camera Assembly	D/S (MESA)	Includes 2 cassei containers.
129.	2	*1.4	2.8	TBD	Cassette Container with 2 Cassettes	D/S (MESA)	Part of item 129.
130	1	*20.0	20.0	TBD	Cosmic Ray Detector Package	D/S	
131	1	*14.6	14.6	TBD	Mounting Assembly RTG Fuel Cask	D/S	
132	1	*25.5	25.5	TBD	Fuel Cask	D/S	
133	1	*14.8	14.8	TBD	Fuel Capsule Assembly	D/S	

NOTE: SCIENTIFIC EQUIPMENT

These provisions reflect the "worst case" MESA design case. Maximum earth launch weight for scientific equipment, ~~including CFE interfaces for same, is 400 pounds. Individual S/C hardware carried will be adjusted to satisfy this~~ limit. The following ground rules apply for CFE weight apportionment: MESA shall be designed to accomodate a SRC table, three (3) SRC's, and mounting for a loaded hand tool carrier. Any additional CFE brackety or provisions necessary to stow/interface other scientific equipment will be changed to

INTERFACE DESIGN CRITERIA

THIS ENCLOSURE PROVIDES (1) REFERENCES FOR UTILIZATION IN DEFINING GFE INTERFACE CRITERIA AND CONFIGURATION AND (2) DEFINITION OF SPECIFIC CRITERIA TO BE UTILIZED FOR DESIGN OF THE S/C SIDE OF INTERFACE, WHERE THE SPECIFIC INTERFACES DICTATE SUCH DEFINITION.

ITEM	GFE DEFINITION REFERENCE
1.	See Note 1 (LID 340-25114)
2.	See Note 1 (LID 340-25148)
3.	**** Sketch provided during PDR
4.	See Note 1 (LID 340-25114) ## (MH01-03312-136)
5.	See Note 1 (LID 340-25146)See Appendix "D".
6.	Same as Item 9. See Appendix "D".
7.	Same as Item 9. See Appendix "D".
8.	Same as Item 9. See Appendix "D".
9.	MH01-03248-136 Rev. A IRN 8461 (provided during PDR). See Appendix "D".
10.	30% increase over existing volume Design for 17lbs. maximum weight.
11.	See Note 1 (LID 340-25147)
12.	See Note 1
13.	See Note 1
14.	See Note 1 (LID 340-25114)
15.	*** MH01-03327-136 MH01-03328-136 MH01-03334-136
16.	See Note 1
17.	See Note 1
18.	See Note 1
19.	See Note 1 (LID 340-25125)
20.	See Note 1 (LID 340-25128)
21.	50% Growth in Volume 1.5 max design weight
22.	See Note 1 (LID 340-25200)

SCIENTIFIC EQUIPMENT REQUIREMENTS

MESA stowage list items reflect the "worst case" design case. Maximum earth launch weight for scientific equipment, including CFE interfaces for same, is 400 pounds. Individual S/C hardware carried will be adjusted to satisfy this limit. The following ground rules apply for CFE weight apportionment: MESA shall be designed to accomodate a SRC table, three (3) SRC's, and mounting for a loaded hand tool carrier. Any additional CFE bracketry or provisions necessary to stow/interface other scientific equipment will be charged to the scientific payload.

Appendix "B"

Scientific Equipment Requirements

For Designing LM Structural Support, for Dynamic Analysis and for Mod Kit Design

ITEM	QTY. PER VEHICLE	UNIT WT. (EARTH #)	EARTH LAUNCH	LUNAR DESCENT	LUNAR ASCENT	PRIOR REF. CONTROL DRAWING #
1) SEQ Containers	2		50-266	50-266	NA	LID-360-22811 (LM-4 and Sub)
a) SEQ Compartment #I		25-155				
b) SEQ Compartment #II		25-155				
2) Sample Return Containers (SRC's)	3	0-80(Lunar Launch)	0-87	0-87	(0-175)	LID-360-22802
		0-29(Earth Launch)			0-80(Each Location)	
3) Lunar Geological Hand Tool Carrier with Tools as follows:	1	0-25.4	0-25.4	0-25.4	N/A	LID-360-22807
Carrier						
Hammer						
Scoop, Small						
Scoop, Large						
Extension Handle						
Tongs						
Staff with Camera Mount						
Scribe/Brush/Hand Lens						
Gnomon						
4) Stereo Camera Assembly		0-17.3	0-17.3	0-17.3	N/A	
Two Film Cassetts		0- 3.2	0- 3.2		0- 3.2(Cassetts only)	

FOOD REQUIREMENTS

A/S STOWAGE

Provide for stowage of a volume of 480 cubic inches of food, with minimum dimensions in two axes of 4.5" x 7.25", and a weight of 5.60 pounds.
Stowage shall be in a CFE beta container which can be prepacked by NASA.

D/S STOWAGE

Provide for stowage of containers separately packaged in beta containers on the MESA pallets which serve as replenishment to the A/S - CFE containers shall be such that they can be prepacked by NASA.
Provide four (4) containers sized as follows:

(1) Volume of 480 cubic inches with minimum dimensions in two axes of 4.5" x 7.25".

(2) Design for weight of from zero (0) to 5.6 pounds of GFE in each container.

(3) Design of pallet should be such that the container can be empty or full for an A/S transfer.

FOOD ENVIRONMENT CRITERIA

Maintain temperature of food between +35°F Minimum to +90°F maximum.

APPENDIX D

Thermal Design Criteria for Operational Cameras and Film

Outbound

Cameras	$+30^{\circ}F$	to $+120^{\circ}F$
Film	$+30^{\circ}F$	to $+110^{\circ}F$

Inbound

Film - No low limit

Max limit of $70^{\circ}F$
($95^{\circ}F$ for 15 min)

ACTION: CSD, Attn: R. E. Smylie

EMU INTERFACE CRITERIA - Items to be Validated

To assure compatibility between the new EMU hardware being designed for ALEM and the spacecraft the EMU-to-spacecraft interfaces must be revalidated. Finalization of these interface agreements prior to the spacecraft Critical Design Review (CDR) presently scheduled for September 1, 1969, is of prime importance. Mutual agreement of the interface design criteria by the interfacing parties prior to design baseline provides an efficient mode of operation.

In support of this effort, the attached itemized list of major EMU-to-LM functional interfaces requiring revalidation has been prepared. Any changes to the specified criteria or any new interface design criteria should be coordinated with GAC through ASPO (PD8/J. Goodman).

Integration of the new helmet stowage bag into the LM has been reviewed with CSD (EC6/J. Kosmo). It was agreed that the existing LM interfaces could be met if the design of the new helmet stowage bag utilized the base of the present bag. GAEC has been notified that there will be no change to the present helmet stowage bag-to-LM interface.

INTERFACE DESIGN CRITERIA REQUIRING REVALIDATION

LIS-330-11001, LiOH Cartridge, Functional Requirements

3.2.2.1 Operating Fluid - Inlet conditions, including 15.2mm Hg CO_2 and contaminants per Table II.

3.3.1 Pressure Drop - 3.5 inches H_2O at .7 lbs/min, 5.0 psia, 90°F and 50% relative humidity.

3.3.2 Odor Removal - Activated charcoal not less than 10% by weight of the amount of LiOH.

Charcoal shall demonstrate a minimum breakthrough time of 50 minutes.

3.3.3 Filtration - Capable of retaining all particles 28μ or greater in size.

3.3.4 Endurance - Per table.

3.4 Reliability - Mean time between failures 5×10^6 hours.

LIS-330-11002, EMU/IM Ventilation System Functional

3.1 Pressure Drop - PGA, including both halves of PGA connectors, not greater than 4.7 inches H_2O with a flow of 12acfm of O_2 at 3.5 psia and 50°F.

PGA maximum allowable ΔP as function of inlet flow rate per figure 1.

3.2 Leakage - Maximum allowable PGA leakage in a vacuum environment shall be 0.0315 lb/hr of O_2 at 3.75 psia or 0.18 psi above cabin pressure at 75°F when tested for 15 minutes.

3.3 Pressure Relief - PGA PRV shall open and reseat between 4.5 and 5.5 psig. PRV flow 3.6 ± 0.2 lbs/hr of O_2 at a PGA pressure of 5.5 psia and a downstream pressure of less than 0.2 psia.

3.4 Carbon Dioxide - Nominal limit of carbon dioxide partial pressure at the PGA inlet shall be 7.6mm Hg. Emergency limits per figure 2.

3.5 Particulate Matter - A maximum of 0.35% of the total flow entering the PGA is unfiltered. The remainder of gas passes through a 28 micron absolute filter before entering the PGA.

APPENDIX E

CM STOWAGE DRAWING

A	SEE REVISION RECORD
B	SEE REVISION RECORD
C	SEE REVISION RECORD
D	SEE REVISION RECORD

PART OR IDENTIFYING NO.	NOMENCLATURE OR DESCRIPTION	MATERIAL	I&T	DATA: SPECIFICATIONS SIZES, NOTES, SUPPLIERS	ZONE
V36-601229	CLAMP		TS		200
V36-601223-101	POUCH				198 199
V36-601207-71	UMBILICAL				213
V36-601207-61	UMBILICAL				213
V36-601207-51	UMBILICAL				213
V36-601205-22	PLATE				103
V36-601205-21	PLATE				103
V36-601204-11	PLATE				103
V36-601197-101	CURTAIN				103
V36-601190-11	ADAPTER				155
V36-601171-21	HOOK				198
V36-601171-11	HOOK				198
V36-601170-41	SNAP				198
V36-601170-31	SNAP				198
V36-601169	ROPE		TS	100	205
V36-613358-11	PNL GAUGE		TS	93	131
V36-601135-201	TOOL SET		TS		123
V36-601118-11	STRAP				170
V36-601083-11	SCREEN				261
V36-601082	CLAMP				111
V36-601015-201	STOWAGE B.				284
V36-601012-351	RESTRAINT				111
V36-601012-241	RESTRAINT				111
V36-601012-141	RESTRAINT				110
V36-601510-101	CONTAINER			92	257
V36-571025	SNAG LINE				227
V36-441435-31	GRD CABLE				158
V36-421649-21	POWER CABLE			117	199
V36-787352-91	CONTAINER			111	134
V36-334064	B3 CONTAINER				145
V36-331551-31	CARRIER				107
V36-331092-401	R12 CONTAINER			51	207
V36-331091-41	CONTAINER				219
V36-331013	A6 CONTAINER				224
V36-331012	A5 CONTAINER				224
V36-331011	A4 CONTAINER				224
V36-331010	A3 CONTAINER				224
V16-613205-3	SHIM			34 103	138 219 224
F01-610347-31	BUFFER AMP			16 31	276
F01-610347-21	CL AMP		TS	16 31	277
-651	ASSY		E		97
-641	ASSY		E		131
-631					103
-621					103
-611					105
-601					124
-591					133
-581					124
-571					234
-561				100	135 331
-551					234
-541					123
-531					237
-521				70 90	231
-511					274
-501	ASSY		E		128
F01-100512	INSTALLATION		E		

PARTS LIST

PART OR IDENTIFYING NUMBER	NOMENCLATURE OR DESCRIPTION	MATERIAL	I&T	DATA: SPECIFICATIONS SIZES, NOTES, SUPPLIERS	ZONE
-491	ASSY		E		234
-481					124
-471					122
-461					127
-451					159
-441					106
-431					107
-421					108
-411					294
-401					100
-391					127
-381					97
-371					125
-361					262
-351					206
-341					115
-331					231
-321					285
-311					203
-301					204
-291					124
-281					138
-271					138
-261					97
-251					98
-241					102
-231					98
-221					99
-211					99
-201					106
-191					106
-181					107
-171					100
-161					101
-151					102
-141					102
-131					103
-121					103
-111					103
-101				70 90	
-91					104
-81					104
-71					97
-61					[illegible]
-51					111
-41					110
-31					98
-21					107
-11	ASSY		E		109
F01-100512	INSTALLATION		E		

PARTS LIST (FOR P/L SEE SH 2 THRU 4, G/N SH 4)

Jerry Goodman ASPO

REQD PER END ITEM: ITEM	QTY	APPLICATION: NEXT ASSY	USED ON	EFFECTIVITY: END ITEM NO.	THRU
BSC	1	F01-340003	V34-3F	1/2	ONLY

UNLESS OTHERWISE SPECIFIED DIMENSIONS ARE IN INCHES
TOLERANCES ON DECIMALS .XX = ± .03, .XXX = ± .010; ANGLES ± 30'
HOLES NOTED "DRILL": .013 THRU .040 +.001 −.001; .041 THRU .130 +.002 −.001; .131 THRU .229 +.003 −.001; .230 THRU .500 +.004 −.001; .501 THRU .750 +.005 −.001; .751 THRU 1.000 +.007 −.001; 1.001 THRU 2.000 +.010 −.001

DR BY M. SIMMONS 2-24-70
CHK BY CHECKED 14 2-26-70
APPROVED BY 191-408

SPACE DIVISION
NORTH AMERICAN ROCKWELL CORPORATION

FIELD SITE INSTALLATION – STOWABLE EQUIPMENT, CREW COMPARTMENT

SIZE J | CODE IDENT NO 03953 | DRAWING NO. F01-100512
SCALE NONE | SHEET 1 OF 14

F01-100512 1D 3M3
F01-100512 1D 2M39
1M3

ZONE	LTR	DESCRIPTION	DATE	APPROVED
	A	SEE REVISION RECORD	8-1-70	M. SIMMONS
	B	SEE REVISION RECORD	1-7-71	SIMMONS
	C	SEE REVISION RECORD	4-23-71 / 5-13-71	W.C. LOWE
	D	SEE REVISION RECORD	6-25-71	W. CLOWE

LIST OF MATERIAL OR PARTS LIST

QTY REQD	PART OR IDENTIFICATION NO.	NOMENCLATURE OR DESCRIPTION	SET	DATA SPECIFICATION, SIZE, NOTES, SUPPLIERS	ZONE
	NAS43DD3-16	SPACER	E		105
2	RD153-1002-0003	WASHER	E		204
6	LD153-0002-2201	WASHER	E		111
	V36-788205-9	I.D. PLATE	E		170
	V36-788205-7		E		170
	V36-788205-19		E	⟨89⟩	235
	V36-788205-15		E	⟨58⟩	231
	V36-788204-3		E	⟨69⟩	207
	V36-788203-17		E		155
	V36-788203-31		E	⟨80⟩	261
	V36-788203-25	I.D. PLATE	E		286
	V36-788203-27	I.D. PLATE	E	⟨64⟩	283
	V36-788203-29		E	⟨63⟩	250
	V36-788203-5		E		236
	V36-788204-5		E	⟨96⟩	158
	V36-788202-5		E		274
	V36-788202-7		E		292
	V36-788201-5		E		146
	V36-788201-11		E	⟨81⟩⟨56⟩	133
	V36-788200-25		E	⟨120⟩⟨79⟩⟨80⟩⟨113⟩	127
	V36-788200-23		E	⟨104⟩	138
	V36-788112-35		E	⟨105⟩	223
	V36-788112-33		E	⟨105⟩	223
	V36-788112-31		E	⟨105⟩	223
	V36-788112-29		E	⟨105⟩	223
	V36-788112-7		E		219
	V36-788112-5		E		219
	V36-788112-3	I.D. PLATE	E		219
	V36-788036-61	BAG	Ts	⟨62⟩⟨100⟩	238
	V36-784013-101	CONTAINER	Ts	⟨109⟩⟨61⟩	238
	V36-788022-101	CONTAINER	Ts		178
	V36-788021	CONTAINER	Ts		227
	V36-788020	STRAP	Ts		F/D
	V36-787062-101	CONTAINER	Ts	⟨106⟩⟨112⟩	254
	V36-787819	CONTAINER	Ts		294
	V36-787829	CONTAINER	Ts		195
	V36-787816	CONTAINER	Ts		269
	V36-787833	CONTAINER	Ts		300
	V36-787814-31	CONTAINER	Ts	⟨60⟩	238
	V36-787352-61	CONTAINER	Ts	⟨75⟩	238
	V36-787062	CONTAINER	Ts		254
	V36-787810-61	CONTAINER	Ts		262
	V36-787808	CONTAINER	Ts		206
	V36-787807	CONTAINER	Ts		278
	V36-787806-31	CONTAINER	Ts		275
	V36-787806	CONTAINER	Ts		275
	V36-787804	CONTAINER	Ts		302
	V36-787803-11	CONTAINER	Ts		180
	V36-787835	CONTAINER	Ts	⟨58⟩	181
	V36-787830	CONTAINER	Ts		198
	V36-787800	CONTAINER	Ts		275
	V36-787313-41	CUSHION	Ts		149
	V36-787108-101	CONTAINER	Ts	⟨112⟩	128
	V36-787103	CONTAINER	Ts		291
	V36-787122	CONTAINER	Ts	⟨65⟩	130
	V36-787101	CONTAINER	Ts		138
	V36-787047	CONTAINER	Ts		159
	V36-787044	CONTAINER	Ts		223
	V36-787019-51	CONTAINER	Ts		226
	V36-785021-11	U4 CONTAINER	Ts		170
1	V36-785011	CONTAINER	Ts		202
	V36-784013-51	BAG	Ts		183
	V36-784013-31	BAG	Ts	⟨100⟩	203
	MIT-15281-7-0-K	SAMPLE	E	⟨4⟩	316
	V36-784011-21	CONTAINER	Ts		303
1	V36-770036-32	SHADE	Ts	⟨119⟩	202
1	V36-770036-31	SHADE	Ts	⟨119⟩	202
1	V36-770034-12	SHADE	Ts		202
1	V36-770034-11	SHADE	Ts		202
	F01-100512	INSTALLATION	E		

QTY REQD	PART OR IDENTIFICATION NO.	NOMENCLATURE OR DESCRIPTION	SET	DATA SPECIFICATION, SIZE, NOTES, SUPPLIERS	ZONE
	MIT-15281-4-C-K	SAMPLE	E	⟨4⟩	316
	MIT-15281-5-C-K	SAMPLE	E	⟨4⟩	316
	MIT-15281-6-C-K	SAMPLE	E	⟨4⟩	316
	V36-787181	CONTAINER	Ts	⟨120⟩	315
	V36-787352-131	CONTAINER	Ts	⟨120⟩	319
	MIT-15281-3-0-C	BOX	E	⟨4⟩	319
	MIT-15281-1-0-E	HEATER	E	⟨4⟩	319
	-841	ASSY	E		127
	-831	ASSY	E		318
	V36-788206-37	I.D. PLATE	E	⟨114⟩	126
	SEB12100056-301	SHIELD	E	⟨4⟩	125
	A7L-101035-01	PLUG	E	⟨4⟩	299
1	V36-770032-11	SHADE	Ts		202
	V36-764135-31	BOOSTER		⟨116⟩	302
1	V36-756010-21	DIM SHADE		⟨59⟩	202
	V36-788020-21	STRAP			157
	V36-756017	CABLE		⟨115⟩	157
	V36-758888-11	STRAP			157
	V36-753028	BRACKET			155
	V36-756019	CABLE	Ts	⟨115⟩	157
	V36-756118	UNIPOD	Ts	⟨55⟩	262
	V36-752060-11	ADAPTER	Ts		144
	V36-715120-31	BRACKET			140
	V36-715104-81	CCU CABLE		⟨49⟩	157
	V36-715104-71	CCU CABLE			213
	V36-715104-61	CCU CABLE			213
	V36-715104-51	CCU CABLE		⟨49⟩	214
	V36-715100-21	CCU HEAD		⟨47⟩⟨48⟩⟨50⟩	158 211
	V36-710100	UMBILICAL			248
	V36-612558-11	COUPLING			198
	V36-787352-51	CONTAINER		⟨71⟩	238
	V36-612547	FILTER			196
	V36-611818-31	PLV DUCT			227
	V36-611818-21	PLV DUCT			224
	V36-610338	KNOB			278
	V36-610320	CASING			278
	V36-610307-11	NEEDLE	Ts		278
1	V36-613350	GUARD	E		311
	V36-756140	UV FILTER	Ts	⟨99⟩	138
1	V36-601625	UV SHADE	Ts	⟨70⟩	202
	V36-331091-71	CONTAINER	Ts	⟨101⟩	219
	V36-601522-101	CONTAINER	Ts	⟨73⟩	283
	V36-601520	CONTAINER	Ts		286
	V36-601405-11	TOOL "E"	Ts		159
	V36-601398-121	COLLECTION	TL	⟨5⟩	292 296
	V36-601389-51	STRAP	Ts		173
	V36-601389-41	STRAP			174
	V36-601373-31	HOSE		⟨121⟩	241
	V36-601361	STRAP			303
	V36-601349	STRAP			239
	V36-601348	STRAP	Ts		239
	V36-756146	UV MOUNT	Ts		144
3	V36-601323-11	STRAP	Ts		119
	V36-601299-81	COVER	E		212
	V36-601299-71	COVER	E		213
	V36-601298-91	COVER	E		210
	V36-601298-81	COVER	E		210
	V36-601298-71	COVER	E		210
1	V36-601234-21	CONTAINER	Ts	⟨92⟩	202
	V36-601230	CLIP	Ts		200
	F01-100512	INSTL	E		

FOR P/L SEE SHEET 1 THRU 4
FOR A/B SEE SHEET 1
FOR G/N SEE SHEET 4

SPACE DIVISION
NORTH AMERICAN ROCKWELL CORPORATION

SIZE J | CODE IDENT NO. 03953 | F01-100512

SCALE NONE | SHEET 2

F01-100512 D

1M3

SYM	DESCRIPTION
A	SEE REVISION RECORD
B	SEE REVISION RECORD
C	SEE REVISION RECORD
D	SEE REVISION RECORD

QTY REQD	PART OR IDENTIFICATION NO.	NOMENCLATURE OR DESCRIPTION	CODE IDENT	MATERIAL	IDENT	DATA SPECIFICATION, SIZE, NOTES, SUPPLIERS	ZONE
	V36-788206-31	PLATE			E	⟨75⟩⟨108⟩	249
	-721	ASSY			E		251
	V36-784014-61	CONTAINER			Ts	⟨78⟩⟨70⟩	331
	V36-787809	CONTAINER			Ts		293
1	-711	ASSY			E		138
	-701	ASSY			E		273
	-691	ASSY			E		254
	-681	ASSY			E		252
	-671	ASSY			E		264
1	-661	ASSY			E		104
	V36-787822	CONTAINER			Ts		307
	V36-787061-401	CONTAINER			Ts		310
	V36-601455	FILTER			Ts	⟨78⟩	333
	V36-761546-31	GUARD			Ts		309
	V36-761545-31	GUARD			Ts		309
	V36-761544-31	GUARD			Ts		309
2	V36-788206-15	I.D. PLATE			E		103
	SEB33100082-217	70 MM MAG			E	⟨4⟩	[illegible]
	SEB33100125-204	16MM MAG			E	⟨4⟩	255 312
	V36-787352-71	CONTAINER			Ts	⟨72⟩⟨70⟩	238
1	V36-601194-11	DOCK TARGET			Ts	⟨33⟩⟨91⟩⟨94⟩	157
	V36-784013-71	CONTAINER			Ts	⟨107⟩	255
	SEB14000010-303	RECEPTACLE			E	⟨4⟩	303
1		TIE CORD		PYRO LACE	E	170.00 LONG ⟨17⟩	F/5
1	2899009	INDICATOR			↑	⟨4⟩ ⟨118⟩	102
	14-0150	FOOD				⟨4⟩ ⟨95⟩	291
2	AGL-400000-16	GARMENT				⟨73⟩	282
	75101-126-[illegible]	EAR TUBE				⟨85⟩	163
	651-400-08	O_2 MASK			↓		238
	651-400-07	O_2 MASK			E	⟨4⟩	238
	V36-601506	SRC			Ts	⟨100⟩	238
	V36-601507	SRC			Ts		240
	V36-421851	CABLE			Ts	⟨96⟩	159
	2012816	SUN FILTER			E	⟨4⟩	229
	2012808	SUN FILTER			↑	↑	231
	14-149-01	CLAMP					261
	14-02051	RECIEVER					234
	14-0133-01	SYSTEM					235
1	14-0131-01	DISPENSER					230
	14-0123	FOOD					105
	14-0122	FOOD					104
3	SLB16100920	HEADSET				⟨86⟩	122
1	SKB32100115201	DATA FILE					99
	SEB42100112-203	CUFF					235
	SEB42100112-202	CUFF					235
	SEB42100112-201	CUFF					234
8	SEB42100086-203	TISSUE					131
1	SEB42100082-219	MED KIT					98
3	SEB42100079-206	TOWEL					137
3	SEB42100079-205	TOWEL					137
3	SEB42100079-204	TOWEL					137
	SEB40100152-202	SURVIVAL KIT			↓	↓	98
	SEB40100151-203	SURVIVAL KIT			E	⟨4⟩	98
	SEB39104914-303	SEPARATOR			E	⟨4⟩	183
1	SEB39103304-302	ADAPTER			E	⟨4⟩	138
	SEB12100045-303	DOSIMETER			↑	↑	310
	SEB33100266-301	FUSE					206
11, 1	SEB33100264-301	BATTERY					170/138 128
1	SEB33100263-302	CASSETTE					170, 138
1	SEB33100262-302	RECORDER					138
1	SEB33100186-205	EXERCISER					125
	SEB33100125-203	16MM MAG				⟨40⟩	146 181
	SEB33100104-201	METER					147
	SEB33100102-210	CAMERA					149
	SEB33100100-214	CAMERA					148
1	SEB33100092-302	TIMER					144
1	SEB33100082-215	70MM MAG					[illegible]
	SEB33100063-302	MTR COVER					206
	SEB33100063-301	MTR COVER			↓	↓	206
	SEB33100051-204	MIRROR			E	⟨4⟩	149
	F01-100512	INSTALLATION			E		

LIST OF MATERIAL OR PARTS LIST

QTY REQD	PART OR IDENTIFICATION NO.	NOMENCLATURE OR DESCRIPTION	CODE IDENT	MATERIAL	IDENT	DATA SPECIFICATION, SIZE, NOTES, SUPPLIERS	ZONE
1	SEB33100043-301	INTERVELOMETER			E	⟨4⟩	170
	SEB33100038-301	DAC CABLE			E	↑	149
1	SEB33100032-201	250 MM LENS			E		171
1	SEB33100031-204	RING SIGHT			E		138
1	SEB33100020-303	CABLE			E		138
	SEB33100019-302	75 MM LENS			E		151
	SEB33100018-301	18 MM LENS			E		151
	SEB33100010-301	10 MM LENS			E		151
1	SEB33100566-301	TAPE KIT			E		128
	SEB32100094-301	FILE CLIP			E		206
	SEB32100025-301	DATA KIT			E		206
1	SEB16101081-709	MONITOR CABLE			E		139
1	SEB16101081-711	TV CABLE			E		139
1	SEB16101081-705	TV MONITOR			E		138
1	SEB16101081-703	TV LENS			E		143
1	SEB16101081-715	TV CAMERA			E		140
3	SEB13100134-301	JETT BAG			E		130
3	SEB13100077-206	HELMET BAG			E		285
9	SEB13100061-209	CWG			E		122
	SEB12100084-301	EYE PATCH			E		206
	SEB12100083-301	ADAPTER			E		241
1	SEB12100078-302	MONOCULAR			E	⟨42⟩	172
	SEB12100050-201	TAPE			E		229
1, 3	SEB12100018-202	PPK			E		128 131
1	RFB-OP-4-2-001	RAD METER			E		102
	BW-1079-002	VAC BRUSH			E		263
	BW-1062-002	BOOT RH			E		165
	BW-1062-001	BOOT LH			E		164
	BW-1061-001	TROUSER			E		165
	BW-1060-001	JACKET			E	⟨8⟩	163
	BW-1053-002	RESTRAINT			E		173
	BW-1053-001	RESTRAINT			E		172
3	BW-1052-001	HEAD PAD			E		134
	A7L-502003-03	HELMET SHLD			E		261
	A7L-101118-01	CONN COVER			E		261
	AGL-507000-03	ADAPTER			E		178
1	AGL-503000-11	EMU KIT			E		127
3	AGL-501000-05	SUB SYSTEM			E	↓	135
	ACR-FA-5	PENLIGHT			E	⟨4⟩	274
1	434-0097-002	COAS BULB			E	⟨2⟩⟨3⟩	155
	2WIAL13-20-25	WASHER			E		104
	2WIAL13-18-30	WASHER			E		105
3	VSF1015S4	WASHER			E	⟨23⟩	202 205
1	A7LB203034-03/04	EV GLOVE			E	⟨4⟩	130
	V36-787352-101	CONTAINER			Ts	⟨109⟩	238
2	ME901-0218-0061	CO_2 ABSORBER			Ts	⟨103⟩⟨1⟩⟨13⟩⟨28⟩	105 219 223
	V36-787352-111	CONTAINER			Ts	⟨109⟩	238
1	ME331-0017-0102	COAS			Ts	⟨2⟩ ⟨1⟩ ⟨25⟩	109
1	ME331-0017-0097	FILTER			Ts	⟨2⟩ ↑ ⟨25⟩	155
1	ME280-0010-0004	FIRE EXT			Ts	⟨13⟩	103
	ME273-0076-0001	COUPLING			Ts		223
	ME273-0075-2024	QUICK DISCON			Ts		198
	ME265-0017-0002	CAP			Ts	↓	198
2	ME114-0002-0004	NUT			E	⟨1⟩	205
	NAS1101C3H6	SCREW			E		104
2	NAS1100C3-8	SCREW			E		204
2	NAS1100C3-6	SCREW			E		205
6	NAS1100C06-7	SCREW			E		111
	NAS501-3-6	BOLT			E		105
	F01-100512	INSTALLATION			E		

LIST OF MATERIAL OR PARTS LIST

FOR P/L SEE SHEET 1,2 & 4
FOR A/B SEE SHEET 1
FOR G/N SEE SHEET 4

SPACE DIVISION
NORTH AMERICAN ROCKWELL CORPORATION

SIZE	CODE IDENT NO.	
J	03953	F01-100512

F01-100512 D

F01-100512 | 3 | D

F01-100512 | 3 | D

SERVICE NOTES

FOR MODIFICATION OF END ITEM 112 ONLY

(47) V36-715100-31 SUPERSEDES & IS SUBSTITUTABLE FOR V36-715100-21
(48) FOR FUTURE PROCUREMENT V56-715100 SUPERSEDES & IS SUBSTITUTABLE FOR V36-715100-21 OR -31
(49) FOR FUTURE PROCUREMENT V56-715101-11, -21, -31 & -41 SUPERSEDES & IS SUBSTITUTABLE FOR V36-715104-51, 61, -71 & 81 RESPECTIVELY
(50) V36-715100-41 SUPERSEDES & IS SUBSTITUTABLE FOR V36-715100-31 OR -21
(51) FOR FUTURE PROCUREMENT V36-331092-501 SUPERSEDES & IS SUBSTITUTABLE FOR V36-331092-401
(55) ADDED V36-756118 1 REQD SEE KIT DWG V36-880738
(56) V36-788201-9 REPLACES V36-788201-7 1 REQD SEE KIT DWG V36-880728
(57) ADDED V36-601640 1 REQD SEE KIT DWG V36-880751
(58) V36-787835 REPLACES V36-784013-181, V36-787344 REPLACES V36-784013-91, V36-788205-13 REPLACES V36-788205-11, V36-788205-15 REPLACES V36-788205-3. 1 REQD EACH. SEE KIT DWG V36-880781.
(59) ADDED V36-756010-21 1 REQD SEE KIT DWG V36-880762
(60) V36-787814-31 REPLACES V36-787814 1 REQD SEE MOD EOM773907
(61) V36-788034-41 REPLACES V36-788034 1 REQD SEE MOD EOM773907
(62) V36-788036-61 REPLACES V36-788036 3 REQD SEE MOD EOM773907
(63) V36-788203-29 REPLACES V36-788203-19 1 REQD SEE MOD EOM 773907
(64) V36-788203-27 REPLACES V36-788203-9 1 REQD SEE KIT DWG V36-880592
(65) V36-787122 REPLACES V36-787102 1 REQD SEE KIT DWG V36-880728
(66) V36-788206-25 REPLACES V36-788206-17 1 REQD SEE KIT DWG V36-880830
(75) ADDED -751 ASSY, V36-787343 1 REQD EACH. REMOVED V36-787136 2 REQD AND ADDED V36-787352-61 1 REQD V36-787206-27 REPLACES V36-788206-3. SEE KIT DWG V36-880729
(69) V36-788204-3 REPLACES V36-788204 SEE KIT DWG V36-880780-11
(70) V36-784013-61 1 REQD ON -21 ASSY WAS 1 REQD ON -611 ASSY
V36-601625 1 REQD ON BASIC ASSY WAS 1 REQD AT RH SIDE WINDOW
V36-784013-101 1 REQD ON -611 ASSY WAS 1 REQD ON -261 ASSY
V36-784013-91 1 REQD ON -731 ASSY WAS 1 REQD ON -661 ASSY
-101 ASSY 1 REQD ON -661 ASSY WAS 1 REQD ON BASIC ASSY
-521 ASSY 1 REQD ON -661 ASSY WAS 1 REQD ON -101 ASSY
SEE MOD EOM773907
(71) ADDED V36-787352-51 1 REQD SEE KIT DWG V36-880730
(72) V36-787352-71 1 REQD REPLACES V36-784013-101 1 REQD SEE KIT DWG V36-880780-11
(73) V36-601522-101 REPLACES V36-601522 1 REQD & A6L-400000-16 REPLACES A6L-400000-14 2 REQD SEE KIT DWG V36-880592
(74) ADDED. V56-601029 1 REQD. SEE KIT DWG V36-880593
REMOVED V36-788202-3 1 REQD SEE MOD EOM773907
(82) ADDED. -781 ASSY, V36-787166-61, V36-421457 1 REQD EACH & V36-612574 2 REQD. SEE KIT DWG V36-880655
(77) ADDED. V36-612570 1 REQD. SEE KIT DWG V36-880655
(78) ADDED. -761 ASSY 1 REQD & V36-601455 1 REQD ON -761 WAS 1 REQD ON -51, V36-784014-61 1 REQD ON -761 WAS 1 REQD ON -21 SEE MOD EOM774047
(79) V36-788200-17 REPLACES V36-788200-15, 1 REQD EACH & ADDED -771 ASSY SEE KIT DWG V36-880781
(80) ADDED. V36-601641 2 REQD, V36-788200-15 1 REQD REPLACES V36-788200-9 1 REQD & V36-788203-31 1 REQD REPLACES V36-788203-15 1 REQD. SEE KIT DWG V36-880751
(81) V36-788201-11 1 REQD REPLACES V36-788201-9 SEE KIT DWG V36-880655
(83) V36-7880206-29 1 REQD REPLACES V36-788206-25 SEE KIT DWG V36-880655
(88) ADDED. V36-787352-81 1 REQD. SEE KIT DWG V36-880782-11
(89) V36-788205-19 1 REQD REPLACES V36-788205-5 SEE KIT DWG V36-880782-11
(93) V36-613358-11 1 REQD REPLACES V36-613358 SEE MOD EOM774044
(91) V36-601194-11 REPLACES V36-601194 1 EA. REQD SEE KIT DWG V36-880771
(96) ADDED: V36-421851 1 REQD & V36-788204-5 1 REQD REPLACES V36-788203-21 1 REQD SEE KIT DWG V36-880792-21
(90) -521 ASSY 1 REQD ON -241 ASSY WAS 1 REQD ON -661 ASSY & REMOVED V36-784013 -171, -181 & -191 1 REQD EACH. SEE MOD EOM763844
(97) V36-601632-211 2 REQD REPLACES V36-601641 2 REQD & V36-601640-101 1 REQD REPLACES V36-601640 SEE KIT DWG V36-880594
(99) ADDED V36-756140 1 REQD. SEE KIT DWG V36-880768
(100) ADDED -791 1 REQD, V36-601505-101 1 REQD, V36-601642 1 REQD, -561 1 REQD, V36-784013-31 1 REQD, V36-601506 1 REQD & V36-601169 5 REQD REMOVED V36-788036-61 1 REQD SEE KIT DWG V36-880784-11
(101) V36-331091-71 1 REQD REPLACES V36-331091-41 & V36-788206-35 REPLACES V36-788206-15 1 REQD SEE KIT DWG V36-880784-11
(103) REMOVED ME901-0218-0061 2 REQD, V16-613205-3 2 REQD & V36-788112-27 1 REQD SEE KIT DWG V36-880784-11
(104) V36-788200-23 REPLACES V36-788200-11 1 REQD & V36-788206-23 1 REQD ON -11 ASSY WAS 1 REQD ON -31 ASSY SEE KIT DWG V36-880784-11
(105) V36-788112-29, V36-788112-31, V36-788112-33 & V36-788112-35 REPLACE V36-788112-19, V36-788112-21, V36-788112-23 & V36-788112-25 RESPECTIVELY 1 REQD EACH SEE KIT DWG V36-880784-11
(106) ADDED V36-787062-101 1 REQD SEE KIT DWG V36-880784-11
(107) ADDED V36-787013-71 1 REQD SEE KIT DWG V36-880784-11
(108) V36-788206-31 REPLACES V36-788206-27 1 REQD SEE KIT V36-880784-11
(109) ADDED V36-784013-101 1 REQD, REMOVED V36-788034-41 1 REQD. ADDED V36-787352-101 1 REQD & V36-787352-111 1 REQD SEE KIT DWG V36-880784-11
(110) ADDED V36-787352-121 1 REQD & V36-756101 1 REQD SEE KIT DWG V36-880873-11
(111) ADDED V36-787352-91 1 REQD SEE KIT DWG V36-880784-11
(112) ADDED V36-787062-101, V36-787108-101 REPLACES V36-787108, 1 REQD EACH. SEE KIT DWG V36-880784-11
(113) V36-788200-19 REPLACES V36-788200-17 1 REQD SEE KIT DWG V36-880784-11
(114) ADDED V36-788206-37 1 REQD SEE KIT DWG V36-880784-11
(115) V36-756017 REPLACES V36-756006-11 AND V36-756019 1 REQD REPLACES V36-752079-11. SEE KIT DWG V36-880806-21
(116) V36-764135-31 REPLACES V36-764135-21 1 REQD SEE KIT DWG V36-880790
(117) V36-421649-21 REPLACES V36-421649-11 1 REQD SEE MOD EOM774075
(118) "TBD" 1 REQD REMOVE FROM -211 ASSY & ADDED TO BASIC ASSY SEE MOD EOM774091
(119) V36-770036-31 1 REQD REPLACES V36-770036-21 1 REQD & V36-770036-32 1 REQD REPLACES V36-770036-22 1 REQD SEE MOD EOM774181

(120) REMOVED V36-788200-19 & ADDED V36-788200-25, V36-787352-131, & V36-787181 1 REQD EACH SEE KIT DWG V36-880783
(121) V36-601373-31 REPLACES V36-601373-21 1 REQD & ADDED V36-601632-211 1 REQD SEE KIT DWG V36-880807

REMOVED V36-780904-21 2 REQD & V36-780904-11 1 REQD SEE MOD EOM774197

64. TRIAL FIT THE F01-610347-21 & -31 AMPULES (FLIGHT HARDWARE) BY INSERTING THEM INTO THE V36-610320 CASING & ATTACHING V36-610338 KNOB ASSY. FAILURE TO PERFORM ANY THREAD ENGAGEMENT OF V36-610338 KNOB ASSY WITHOUT ANY EXCESSIVE, IS CAUSE FOR REJECTION OF THE F01-610347-21 OR -31 AMPULE.
63. VERIFY PROPER PLACEMENT OF END DIVIDERS. THE TEFLON LINER SHOULD BE TOWARD CENTER ("THIS SIDE OUT" MARKING TO FACE CONTAINER END)
62. EVACUATE V36-601632-111 WATER CONTAINERS PER THE "PREPARATION BEFORE PACKAGING REQUIREMENTS OF MA0206-0338 PRIOR TO VACUUM CHAMBER TESTS & LAUNCH
61. 14-0150 REF QTY & CONFIGURATION OF FOOD TO BE AS SPECFIED BY THE NASA DIETITIAN
60. NON-FLIGHT ITEM MAY BE USED FOR ALL TESTS AT KSC AND SHALL BE MAINTAINED IN ACCORDANCE WITH SPEC MA0605-023
59. V36-601194 MAY BE SUBSITUTED FOR V36-601194-11
58. PLACE MAGAZINES IN CONTAINER WITH FILM WINDOW AWAY FROM SNAP CLOSURE OF CONTAINER
57. HEADSET PART NO. TO BE AS SPECIFIED IN THE NASA APOLLO STOWAGE LIST (ITEM NO. E0104) FOR MISSION J1 IN CONCURRENCE WITH DOCUMENT TCP3300 & APPROVED BY THE FCDR
56. EARTUBE PART NO. TO BE AS SPECIFIED IN THE NASA APOLLO STOWAGE LIST FOR MISSION J1 IN CONCURRENCE WITH DOCUMENT TCP3300 & APPROVED BY THE FCDR. PART NO. 74925-107-(85) MAY BE USED IF SPECIFIED
55. TRIAL FIT V36-421457 CABLE & BOTH V36-612547 BAG ASSEMBLIES TO THE V36-612570 VACUUM CLEANER FOR THREE ASSEMBLY & DISASSEMBLY CYCLES, VERIFYING POSITIVE FIT & DISASSEMBLY EASE AFTER EACH CYCLE. FAILURE TO PERFORM POSITIVE FIT & DISASSEMBLY SHALL BE DEEMED A FAILURE.
54. SHIP V36-601560 1 REQD TO KSC & HOLD IN BONDED STORAGE AT THE MANNED SPACECRAFT OPERATION BUILDING (MSOB) UNTIL REQUIRED.

53. AN X-RAY INSPECTION SHALL BE CONDUCTED AFTER ALTITUDE CHAMBER TEST FOR DETERMINATION OF RUBBER DELAMINATION. X-RAYING PROCESS TO BE PERFORMED WITH THE INTERNAL PRESSURE OF THE HOSES REDUCED TO 25±1 INCHES OF MERCURY. THE POINTS OF EXAMINATION SHALL BE AT 90°±10° INCREMENTS AROUND THE PERIPHERY OF EACH HOSE FOR THE ENTIRE LENGTH OF THE ASSY. SEE INSPECTION DIAGRAM 213 FOR A METHOD OF INSPECTING A SEGMENT OF HOSE ASSY WITH THREE X-RAY PICTURES. ALL DELAMINATION ENCOUNTERED SHALL BE SUBMITTED TO ENGINEERING FOR DISPOSITION.
52. EXTEND V36-553007 TO MAXIMUM LENGTH & INSTALL IN POUCH
51. INSTALL QUICK ACTING FASTENERS PER MA0101-007
50. KEUFFEL & ESSER CO. LOS ANGELES, CALIF OBTAIN AT SITE REF GSE MODEL NO. A34-420
49. V36-781512 TO BE USED FOR INSTALLATION & ROUTING OF CREW COMPT CABLES AND LINES FOR TEST
48. THIS DOCUMENT IS CONTROLLED BY AN INTERFACE CONTROL DOCUMENT, REFERENCE REPORT NO. SD69-637
47. VERIFY/LUBRICATE SUIT HOSE INTERCONNECT "O" RINGS & VACUUM CLEANER HOSE BRUSHES INTERFACE USING MB0140-005 LUBRICANT
45. SEB12100078-303 MAY BE USED IN LIEU OF SEB12100078-302
44.
43. SEB33100125-205 MAY BE USED IN LIEU OF SEB33100125-203
42. IN THE EVENT THAT THE FOOD PACKAGE CANNOT BE INSTALLED IN A NORMAL MANNER (I.E. WITH V36-334509 DOOR OPENED TO NORMAL 90° POSITION) PROCEED AS FOLLOWS; REMOVE V36-334135-3 CLOSEOUT PANEL & LOWER V36-334509 DOOR SUFFICIENTLY TO PERMIT INSTALLATION OF FOOD PACKAGE BY DISCONNECTING V36-334572 SLIDE. REINSTALL AFTER COMPLETING FOOD PACKAGE INSTALLATION
41. STOWAGE LOCATIONS FOR COMPONENTS IN THE DATA FILE TO BE DETERMINED BY THE STOWAGE TEST CONDUCTOR IN CONCURRENCE WITH THE NASA FLIGHT CREW SUPPORT LEADER
40. PUNCH HOLES IN V36-788036 FOR MOUNTING PINS AT FIRST CHECK
38. PRIOR TO ALTITUDE TEST & FLIGHT MB0140-005 LUBRICANT MAY BE SPARINGLY APPLIED TO THE FOLLOWING SPECIFIED AREAS ONLY; TV CAMERA BRACKET TO SPACE CRAFT INTERFACE, 250 & 500 MM LENS TO SPACE CRAFT INTERFACE, REMOVE EXCESS LUBRICANT BY WIPING WITH A LINT FREE CLOTH LEAVING ONLY A THIN FILM
37. V36-613205-3 SHIMS TO BE USED AS REQD
36. ME426-0082-0007 MAY BE SUBSTITUTED FOR V36-601194-11
35. DEFLATE 14-0133-01 & STOW WITH VALVE IN OPEN POSITION
34. F01-610347-21 & F01-610347-31 AMPULES NOT TO BE DELIVERED TO KSC UNTIL REQUESTED BY LAUNCH OPERATIONS (SHELF LIFE 30 DAYS)
33. INSTALL SURVIVAL KIT NO. 2 (SEB40100152-203) INTO AFT PORTION OF R4 STOWAGE COMPARTMENT WITH ARROW ADJACENT TO DOOR & POINTING IN THE +X DIRECTION. INSTALL SURVIVAL KIT NO. 1 (SEB40100151-20) FORWARD OF SURVIVAL KIT NO. 2 WITH ARROW ADJACENT TO DOOR & POINTING IN THE +X DIRECTION. ATTACH THE STRAP FROM KIT NO. 2 TO THE D RING ON THE HANDLE OF KIT NO. 1
32. GFE NON FLIGHT WATER GUN SHALL BE USED UP TO 30 HOURS PRIOR TO FLIGHT
31. THE CO_2 ABSORBERS SHALL BE PROTECTED FROM ATMOSPHERIC EXPOSURE BY A SEALED DOUBLE WRAP PLASTIC CONTAINER UNTIL STOWAGE FOR LAUNCH EXCEPT FOR A MAXIMUM ALLOWABLE ATMOSPHERIC EXPOSURE OF 4 HOURS TOTAL. ATMOSPHERIC EXPOSURE SHALL BE IN AN ENVIRONMENTALLY CONTROLLED AREA ONLY
30. CORD TO BE DRAWN TAUT & TIED IN SQUARE KNOT; REMOVE EXCESS CORD MATERIAL BEYOND KNOT .25±.12
29. DO NOT UNFASTEN COVER SNAPS WHEN INSTALLING FOOD CONTAINERS
28. INSTALL & FIT CHECK AT STOWAGE & USING LOCATIONS PER MA0209-0120
27. APPLY THIN FILM OF LUBRICANT MB0140-005 TO PAD NODES USING A RUBBER GLOVE. REMOVE EXCESS LUBRICANT THAT ACCUMULATES OUTSIDE THE NODE AREA WITH A LINT FREE CLOTH.
26. VOI-SHAN MFG CO. CULVER CITY CALIF.
25. SERIALLY IDENTIFIED ITEMS SHALL BE SUBJECT TO THE REQUIREMENTS OF MA0208-0108
24. FILM TO BE INSTALLED IN CAMERA PRIOR TO STOWAGE
23. INSTALL PER MA0301-0077
22. CUT TETHER & REMOVE COVER PRIOR TO FLIGHT
21. SPOT TIE APPROX 12.00 APART USING SQ KNOT REMOVE EXCESS TIE CORD MATERIAL BEYOND KNOT .25±.12 (PYRO LACE)
20. BENTLEY HARRIS CO. CONSHOHOCKEN PA PYRO LACE TYPE STFE-30B
18. UMBILICAL PROTECTIVE COVERS ARE TO REMAIN INSTALLED FOR DOWNEY & FIELD SITE REVIEWS & OR TESTS REMOVE BEFORE FLIGHT
17. SNAP IN PLACE AS SHOWN
16. SHIP DIRECT FROM SUBCONTRACTOR TO NASA/KSC FLORIDA
15. LOCATE I.D. PLATES APPROX AS SHOWN ARROW ▲ INDICATES TOP EDGE OF I.D. PLATE
14. CARE SHOULD BE TAKEN DURING INSTALLATION OF SPOT METER-EXPOSURE DIAL INTO CUSHION TO PREVENT SWITCH FROM BEING ACTUATED
13. INSTALL PER NR/NASA CREW SYSTEMS ENGINEERING
12. INSTALL PER MA0602-004
11. BW-1060-002 MAY BE USED IN LIEU OF BW-1060-001
10. MATE V36-610320 (CASING) WITH V36-610338 (KNOB)
9. MARK THE TOP SURFACE OF ME901-0218-0061 AS DESIGNATED PER MA0104-010 CL 2, GR B, .25 & .38 HIGH LETTERING PER MP170-9001-0003 COLOR WHITE
8. INSPECTION HANDLING & DISPOSAL OF GERMICIDE POUCHES PER MA0311-0009
7. GFE CONTRACTOR INSTALL
6. JAY-EL PRODUCTS PART NO. B50258-1 IS AN ACCEPTABLE SUBSTITUTE FOR 434-0097-002
5. AUTONETICS DIV IOWA M6540
4. COMMERCIAL PART SEE SPEC CONTROL DWG
3. REMOVE ALL PROTECTIVE SHIPPING CAPS & TAPE FROM ALL GFE & CFE HARDWARE BEFORE STOWAGE EXAMPLE: 02 UMBILICALS, URINE HOSE Q DISC, ME331-0017-0086 PLUG FROM RH & LH COAS MOUNT, ETC
2. INSTALL THREADED FASTENERS PER MA0101-005
1. ALL EQUIPMENT SHALL BE GIVEN ADEQUATE CARE & PROTECTION WHEN BEING PACKAGED FOR VEHICLE INSTALLATION

NOTES: UNLESS OTHERWISE SPECIFIED

TRACEABILITY SYMBOLS	
E	TRACEABILITY NOT REQD
TL	TRACEABLE BY LOT NO.
TS	TRACEABLE BY SERIAL NO.
TM	TRACEABLE BY MEMBER NO.

(22)

REVISIONS

ZONE	LTR	DESCRIPTION	DATE	APPROVED
	A	SEE REVISION RECORD	8-1-70	M. SIMMONS
	B	SEE REVISION RECORD	1-7-71	SIMMONS
	C	SEE REVISION RECORD	4-23-71 5-13-71	W.C LOWE
	D	SEE REVISION RECORD	6-25-71	W. LOWE

PARTS LIST

PART OR IDENTIFYING NUMBER	NOMENCLATURE OR DESCRIPTION	MATERIAL	LET	DATA SPECIFICATIONS SIZES, NOTES, SUPPLIERS	ZONE
SEB33100775-001	CAN		E	(4)	315
SEB33100784-301	BRACKET		E	(4)	135
-821	ASSY		E		124
V36-787352-121	CONTAINER		TS	(110)	175
V36-756101	BRACKET		TS	(110)	175
-811	ASSY		E		126
V36-601505-101	CONTAINER		TS	(100)	332
-801	ASSY		E		252 126
-791	ASSY		E	(100)	237
SV723164-2	OPS STRAP		E	(4)	297
SV723165-2	OPS STRAP		E	(4)	297
V36-787352-81	BAG		TS	(88)	233
SEB14100023-301	FILTER		E	(4)	233
V36-612574	VAC BAG		TS	(82)	326
V36-421457	CABLE		TS	(82)	326
V36-787166-61	CONTAINER		TS	(82)	327
SEB42100187-301	DOSIMETER		E	(4)	281
V36-787344	CONTAINER		TS	(58)	315
SEB33100775-301	CASSETTE		E	(4)	315
SEB33100008-301	CAMERA		E	(4)	315
SEB33100009-301	LENS		E	(4)	316
-781	ASSY		E	(82)	130
V36-612570	CLEANER		TS	(77)	97
-771	ASSY		E	(79)	122
-761	ASSY		E	(78)	288
-751	ASSY		E	(75)	251
V36-601560	LEG CARRIER		TS	(54)	—
~~-741~~	~~ASSY~~		E	(90)	178
~~-731~~	~~ASSY~~		E	(70) (90)	177
V36-601640-101	H_2O BAG		TS	(99) (57) (98) (97)	257
V36-787343	CONTAINER		TS	(75)	318
V36-601632-211	CONTAINER		TS	(121) (80) (97)	259
V56-601029	CONTAINER		TS	(74)	259
V36-601630	IV TETHER		TS		297
V36-601642	PLATE		E	(100)	331
SEB33100852-301	RETRIEVAL ASSY		E	(4)	300
716165	DECAL		E	(46)	103
V36-781512	INSTL		E	(45)	—
SV722343-1	PRESS VALVE		E	(4)	300
SV723165-1	OPS STRAP		E	(4)	297
SV723164-1	OPS STRAP		E	(4)	297
SV722922-2	PGA ADAPTER		E	(4)	298
V36-788205-13	PLATE		E	(58)	178
V36-788203-23	PLATE		E		122
V36-788206-35	PLATE		E	(101)	101
V36-788206-29	PLATE		E	(83) (66)	291
V36-788206-9	PLATE		E		104
V36-788206-23	PLATE		E	(104)	138
V36-788206-19	PLATE		E		131
F01-100512	INSTL		E		

FOR P/L SEE SHEET 1, 2 & 3
FOR A/B SEE SHEET 1

SPACE DIVISION
NORTH AMERICAN ROCKWELL CORPORATION

SIZE J CODE IDENT NO 03953 DRAWING NO. F01-100512 SHEET 4

F01-100512 SH 4 REV D

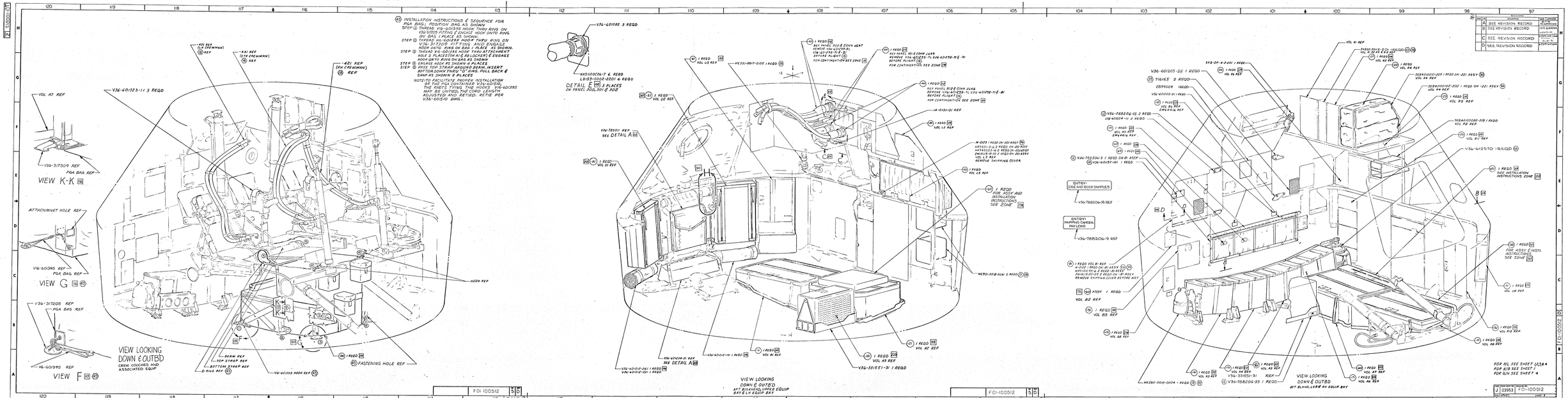
VIEW K-K
VIEW G
VIEW F
VIEW LOOKING DOWN & OUTBD
CREW COUCHES AND ASSOCIATED EQUIP
DETAIL E
VIEW LOOKING DOWN & OUTBD
AFT BULKHD, LEB & FWD EQUIP BAY
VIEW LOOKING DOWN & OUTBD
AFT BULKHD, LEB & FWD EQUIP BAY
FOR IVL SEE SHEET 123A & FOR B/B SEE SHEET 1 FOR B/H SEE SHEET 4
FOI-100512

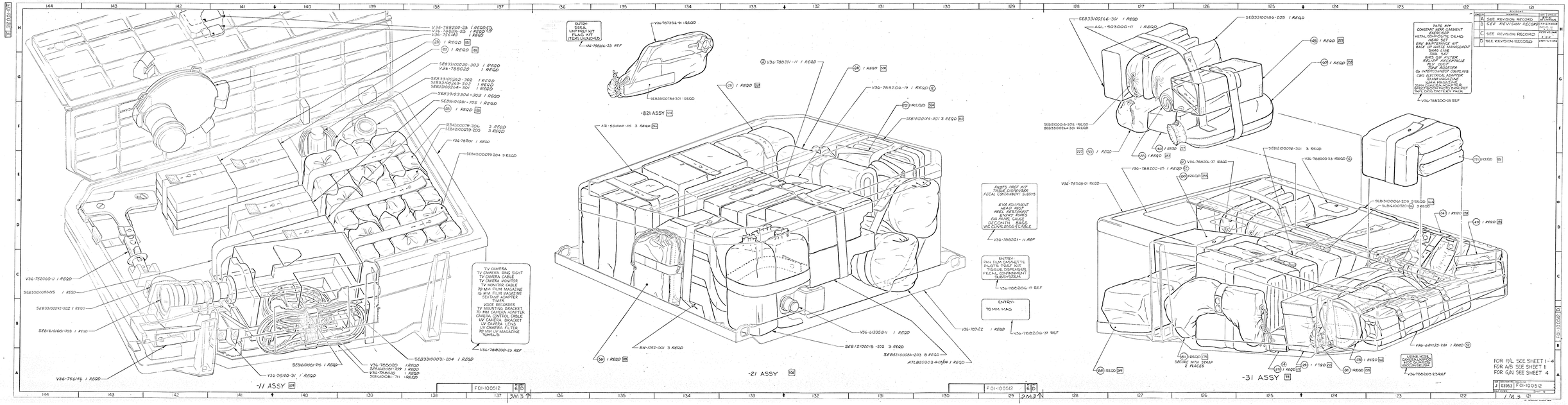
-11 ASSY
-821 ASSY
-21 ASSY
-31 ASSY
TV CAMERA
TV TAMRON RING SIGHT
TV CAMERA CABLE
TV CAMERA MONITOR
TV MONITOR CABLE
70 MM FILM MAGAZINE
16 MM FILM MAGAZINE
SEXTANT ADAPTER
TIMER
VOICE RECORDER
TV CAMERA BRACKET
35 MM CAMERA ADAPTER
CAMERA CONTROL CABLE
UV CAMERA BRACKET
UV CAMERA LENS
UV CAMERA FILTER
70 MM UV MAGAZINE
TOWELLS
PILOT'S PREF KIT
TISSUE DISPENSER
FECAL CONTAINMENT SUBSYS
EVA EQUIPMENT
HEAD REST
HEEL RESTRAINT
ENTRY FORES
EVA PANEL GAUGE
DECONTAMINATION
VACCUM/GAS/FECAL CABLE
ENTRY:
PAN FILM CASSETTE
PILOT'S PREF KIT
TISSUE DISPENSER
FECAL CONTAINMENT SUBSYSTEM
ENTRY:
70MM MAG
PAPE KIT
CONSTANT WEAR GARMENT
ENERGY SUB
METAL COMPOSITE DEMO
HEAD SET
EMU MAINTENANCE KIT
BACK PACK ATTACHMENT
SUBS LOKS
TOOL SET
WRIST & ANKLE
RECEPTACLE
RECEPTACLE
TOWS
TOWS BOOSTER
O2 INTERCONNECT COUPLING
CWG EXTERNAL ADAPTER
LO WAR MAGAZINE
35MM CAMERA CONCTTE
35MM CAMERA CONCTTE
INFECTION CONTROL PACKET
UNIFECTION SWITCH PACK
LOSING HOSE
CAMERA/LANDSCAPE
CAMERA/LANDSCAPE
MOTAR/BRUSH
SECURE WITH STRAP
2 PLACES
REVISIONS
A SEE REVISION RECORD
B SEE REVISION RECORD
C SEE REVISION RECORD
D SEE REVISION RECORD
FOR P/L SEE SHEET 1-4
FOR A/B SEE SHEET 1
FOR G/N SEE SHEET 4
J 03953
F01-100512

REVISION			
SYM	ZONE	REVISION	BY & DATE
A		SEE REVISION RECORD	
B		SEE REVISION RECORD	
C		SEE REVISION RECORD	
D		SEE REVISION RECORD	

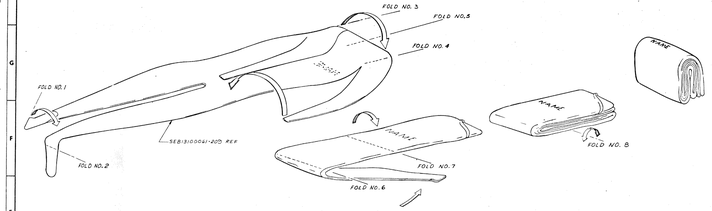

FOLDING INSTRUCTIONS FOR C.W.G

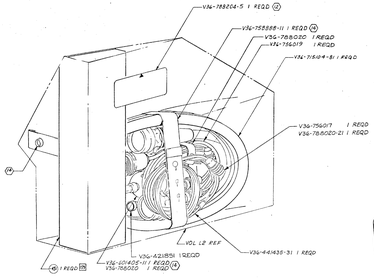

-191 ASSY

"TOOL E
CCU CONTROL WAND
SPARE CCU CABLE
CCU ABS GRD CABLE
TOWN CAMERA CABLE
CAC TIMING CABLE
FSC/SIS RETRACT CABLE"

V36-788104-5 REF

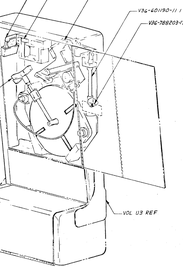

"CONE BULB
CONTROL TARGET
ADAPTER
CONTROL TARGET
CONE BULB
CONE FILTER"

V36-788203-19 REF

-61 ASSY

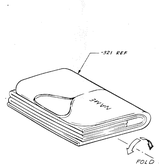

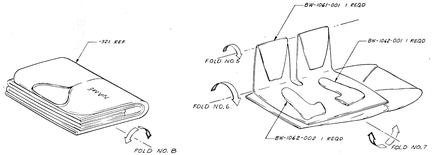

-321 ASSY

FOLDING INSTRUCTIONS FOR IN FLIGHT COVERALLS

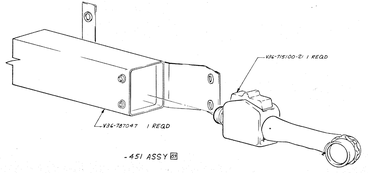

-451 ASSY

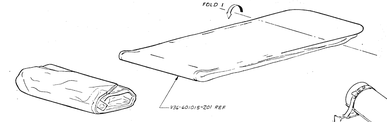

FOLDING INSTRUCTIONS FOR TEMP STOWAGE BAG

EXECUTE FOLD 1 THEN ROLL AS SHOWN.

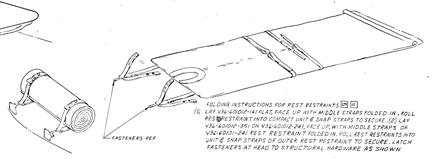

FOLDING INSTRUCTIONS FOR REST RESTRAINTS

(1) LAY V36-401001-141 FLAT, FACE UP WITH MIDDLE STRAPS FOLDED IN. ROLL REST RESTRAINT INTO CONTACT UNITS & SNAP STRAPS TO SECURE. (2) LAY V36-401001-351 OR V36-401001-241, FACE UP, WITH MIDDLE STRAPS OR V36-401001-241 REST RESTRAINT FOLDED IN, ROLL REST RESTRAINTS INTO UNIT & SNAP STRAPS OF OUTER REST RESTRAINT TO SECURE. LATCH FASTENERS AT HEAD TO STRUCTURAL HARDWARE AS SHOWN.

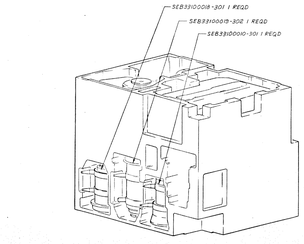

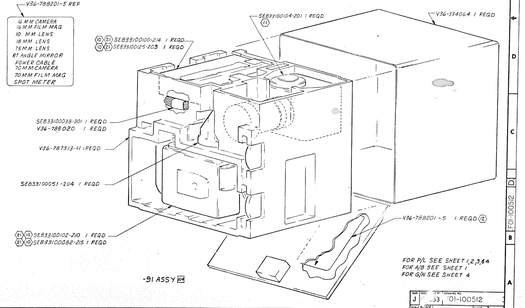

-91 ASSY

FOR P/L SEE SHEET 1,2,3&4
FOR A/B SEE SHEET 1
FOR G/N SEE SHEET 4

J	03	01-100512	

F01-100512 7 0 3 M 3 1

F01-100512 7 0 2 M 3 1

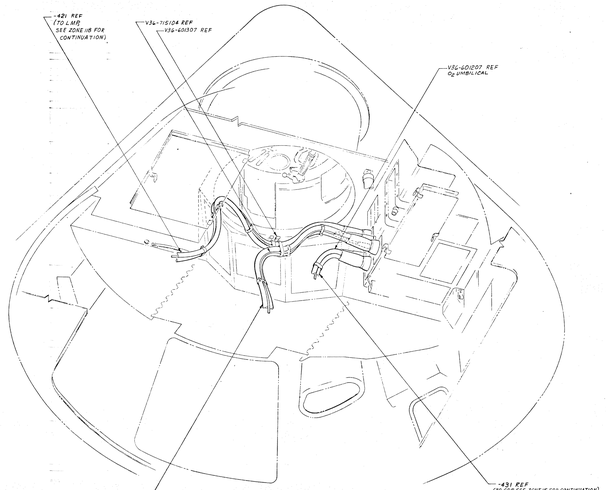

VIEW LOOKING UP AT TUNNEL

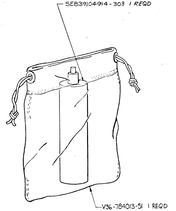

STEP 1

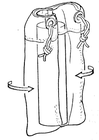

STEP 2

-391 ASSY 57

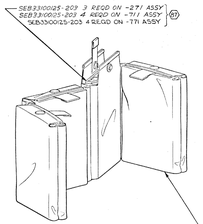

-271 ASSY 138
-711 ASSY 138
-771 ASSY 138

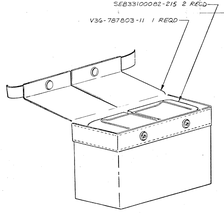

-281 ASSY 138

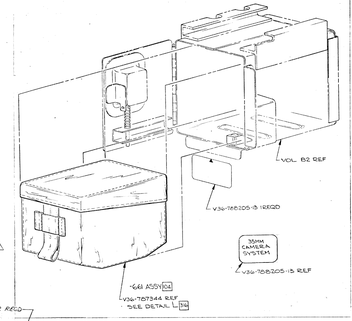

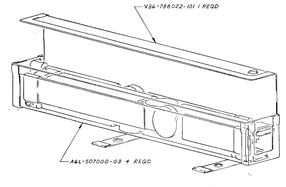

-371 ASSY 129

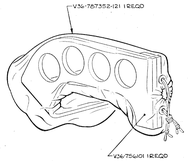

-811 ASSY 129

-431 ASSY 54
SNAP STRAPS END TO END
WRAP LAST STRAP & SECURE

-551 ASSY 54

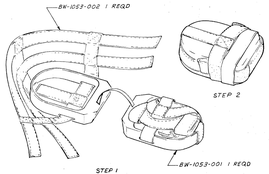

STEP 1

STEP 2

-351 ASSY 54

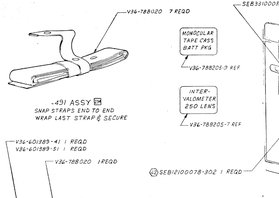

-71 ASSY 57

-571 ASSY 54
STACK STRAPS AND SNAP TOGETHER
AS SHOWN

FOR R/L SEE SHEET 1,2,3,4
FOR A/B SEE SHEET 1
FOR G/H SEE SHEET 4

REVISIONS			
ZONE	DESCRIPTION	DATE	APPROVED
A	SEE REVISION RECORD	1-19-2000	JP SIMMONS
B	SEE REVISION RECORD	1-19-2000	JP SIMMONS
C	SEE REVISION RECORD	12-21-2000	JP SIMMONS
D	SEE REVISION RECORD	12-21-2000	JP SIMMONS

J 03953 F01-110-0512

F01-100512 S D 3M3

F01-100512 S D 3M3

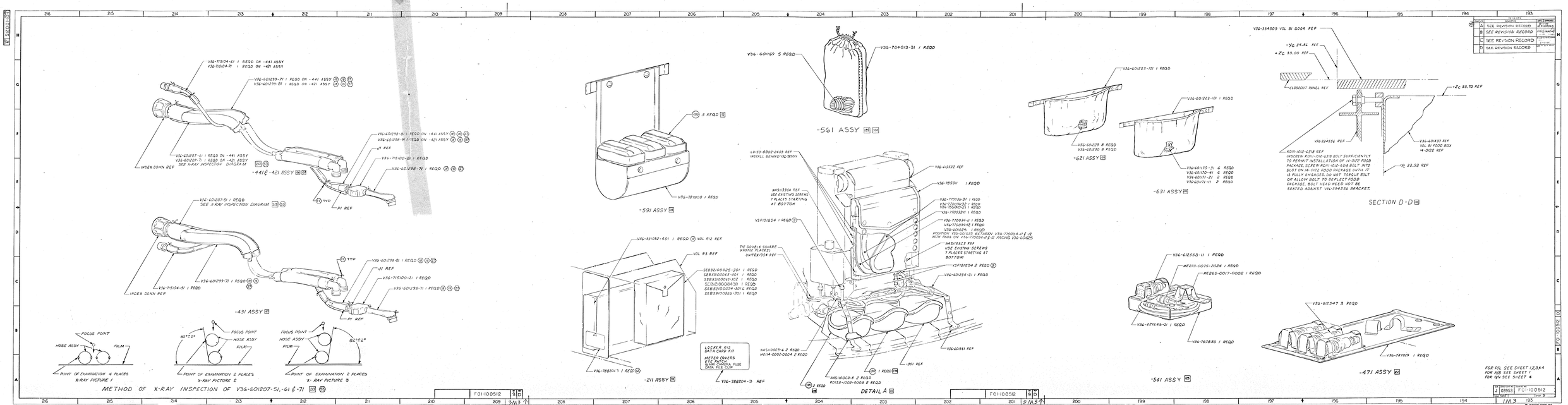
V36-715104-61 1 REQD ON -441 ASSY
V36-715104-71 1 REQD ON -421 ASSY
V36-601299-71 1 REQD ON -441 ASSY
V36-601299-81 1 REQD ON -421 ASSY
V36-601298-81 1 REQD ON -441 ASSY
V36-601298-91 1 REQD ON -421 ASSY
U1 REF
V36-715100-21 1 REQD
V36-601298-71 1 REQD
V36-601207-61 1 REQD ON -441 ASSY
V36-601207-71 1 REQD ON -421 ASSY
SEE X-RAY INSPECTION DIAGRAM
INDEX DOWN REF
PI REF
-441 & -421 ASSY
V36-601207-51 1 REQD
SEE X-RAY INSPECTION DIAGRAM
V36-601298-81 1 REQD
U1 REF
V36-715100-21 1 REQD
V36-601299-71 1 REQD
V36-715104-51 1 REQD
INDEX DOWN REF
PI REF
-431 ASSY
FOCUS POINT
HOSE ASSY
FILM
POINT OF EXAMINATION 4 PLACES
X-RAY PICTURE 1
82°±2°
POINT OF EXAMINATION 2 PLACES
X-RAY PICTURE 2
POINT OF EXAMINATION 2 PLACES
X-RAY PICTURE 3
METHOD OF X-RAY INSPECTION OF V36-601207-51,-61 & -71
V36-601129 5 REQD
V36-784013-31 1 REQD
-561 ASSY
3 REQD
V36-787808 1 REQD
-591 ASSY
V36-331092-401 1 REQD VOL R12 REF
VOL R3 REF
SEB321100025-301 1 REQD
SEB321100043-301 1 REQD
SEB321100043-302 1 REQD
SEJRJ100026-301 1 REQD
SEB321100034-301 4 REQD
SEB321100026-301 1 REQD
V36-788204-3 1 REQD
-211 ASSY
LOCKER R12
DATA CARD KIT
METER COVERS
ETE PACKAGE
ELECTRICAL FUSE
DATA FILE CLIP
V36-788204-3 REF
LD153-0002-2403 REF
INSTALL BEHIND V36-785011
NAS1339C4 REF
USE EXISTING SCREWS
7 PLACES STARTING
AT BOTTOM
V5F101654 1 REQD
TIE DOUBLE SQUARE KNOTTED PLACES
UNITEX7154 REF
V36-615532 REF
V36-785011 1 REQD
V36-770030-31 1 REQD
V36-770096-32 1 REQD
V36-770030-21 1 REQD
V36-770032-61 1 REQD
V36-770094-11 1 REQD
V36-770094-12 1 REQD
V36-601625 1 REQD
POSITION V36-601625 BETWEEN V36-770034-11 & 12
WITH PADS ON V36-770034 AT & 0 FACING V36-601625
NAS1339C3 REF
USE EXISTING SCREWS
7 PLACES STARTING AT
BOTTOM
V5F101654 2 REQD
V36-601234-21 1 REQD
V36-601141 REF
-301 REF
NAS1100C3-4 2 REQD
MS14-0002-0004 2 REQD
1 REQD
NAS1100C3-8 2 REQD
RD153-1002-0002 2 REQD
2 REQD
DETAIL A
V36-601223-101 1 REQD
V36-601229 8 REQD
V36-601230 8 REQD
-621 ASSY
V36-601223-101 1 REQD
V36-601170-31 6 REQD
V36-601170-41 6 REQD
V36-601171-21 2 REQD
V36-601171-11 2 REQD
-631 ASSY
V36-394509 VOL B1 DOOR REF
-Yc 35.94 REF
+Zc 33.00 REF
CLOSEOUT PANEL REF
+Zc 33.70 REF
V36-394554 REF
V36-601437 REF
VOL B1 FOOD BOX
4-D22 REF
-Yc 33.93 REF
RD111-1012-4318 REF
WSCREW RD111-1012-4318 BOLT SUFFICIENTLY TO PERMIT INSTALLATION OF 14-D22 FOOD PACKAGE. SCREW RD111-1012-4318 BOLT INTO SLOT ON 14-D22 FOOD PACKAGE UNTIL IT IS FULLY ENGAGED. DO NOT TORQUE BOLT OR ALIGN BOLT TO DEFLECT FOOD PACKAGE. BOLT HEAD NEED NOT BE SEATED AGAINST V36-394556 BRACKET.
SECTION D-D
V36-612558-11 1 REQD
ME273-0075-2024 1 REQD
ME265-0017-0002 1 REQD
V36-421649-21 1 REQD
V36-787830 1 REQD
-541 ASSY
V36-612547 3 REQD
V36-787829 1 REQD
-471 ASSY
FOR P/L SEE SHEET 1,2,3,4
FOR N/B SEE SHEET 1
FOR Q/N SEE SHEET 4
REVISIONS
A SEE REVISION RECORD
B SEE REVISION RECORD
C SEE REVISION RECORD
D SEE REVISION RECORD
F01-100512
03953
SHEET 3
1M3

V36-601349 1 REQD
V36-788020 1 REQD
V36-601348 1 REQD
-531 ASSY 237
651-400-07 1 REQD ON -301 ASSY
651-400-08 1 REQD ON -311 ASSY
V36-788020 1 REQD
SNAP AROUND MASK AS SHOWN
-301 & -311 ASSY 204 203
(12) V36-788203-5 1 REQD
-531 1 REQD 239
VOL R5 (REF)
-571 1 REQD 170 (14)
-491 1 REQD 173 (14)
-551 1 REQD 173 (14)
CABLE RESTR STRAP
COUCH RESTR STRAP
PROBE STOW. STRAP
UTILTY STRAP
V36-788203-5 REF
(14)
-231 ASSY 98
V36-601507 1 REQD
FOLD CONTAINERS FLAT & PLACE INSIDE V36-601507 AS SHOWN. SECURE ASSY TO LOCKER AS SHOWN
PULL STRAPS TAUT AND TIE SQUARE KNOT 5 PLACES
V36-784013-101 1 REQD
V36-788036-61 2 REQD
V36-787814-31 1 REQD
V36-787352-71 1 REQD
V36-601506 2 REQD
V36-787352-61 1 REQD
V36-787352-51 1 REQD
V36-787352-101 1 REQD
V36-787352-111 1 REQD
-791 1 REQD 331
V36-787122 REF
A2 LOCKER
ENGAGE HOOK 4 PLACES
-611 ASSY 105
AND INSALLATION INSTRUCTIONS
URINE TRANSFER EQUIPMENT
V36-788205-19 REF
V36-788205-19 1 REQD (12)
SEB42100112-203 1 REQD
SEB42100112-201 1 REQD
SEB42100112-202 1 REQD
V36-782019 REF
VOL R11 REF
14-0133-01 3 REQD (32)
14-02051 1 REQD
V36-787352-81 1 REQD (14)
SEB14100023-301 1 REQD
-251 ASSY 98
2012808 1 REQD
(12) V36-788205-15 1 REQD
VOL R6 (REF)
2012816 1 REQD
V36-788205-15 REF
PENLIGHTS
SUN FILTERS
TAPE
CL INJECT
275 -331 1 REQD
279 -521 1 REQD
SEB12100050-201 1 REQD
-241 ASSY 102
14-0131-01 1 REQD (29) (19)
VIEW C-C 108
V36-611818-21 2 REQD
V36-788021 1 REQD
V36-611818-31 1 REQD
-461 ASSY 127
V36-571025 1 REQD
V36-788020 1 REQD
V36-787019-51 1 REQD
-501 ASSY 128
ME273-0076-0001 3 REQD (44)
V36-787044 1 REQD
-481 ASSY 124
V36-788112-3 REF
V36-788112-5 REF
V36-788112-7 REF
ME901-0218-0061 4 REQD (13) (28)
V36-331091-41 1 REQD ON -111 ASSY & -121 ASSY (24)
V36-331091-71 1 REQD ON -181 ASSY (24) (102)
VOL B5, B6 & A9 REF
V16-613205-3 4 REQD
V36-788112-3 1 REQD ON -111 (12)
V36-788112-5 1 REQD ON -121 (12)
V36-788112-7 1 REQD ON -181 (12)
-111, -121 & -181 ASSY 103 103 107
V36-331010 1 REQD ON -141 ASSY (24) VOL A3 REF
V36-331011 1 REQD ON -151 ASSY (24) VOL A4 REF
V36-331012 1 REQD ON -161 ASSY (24) VOL A5 REF
V36-331013 1 REQD ON -171 ASSY (24) VOL A6 REF
V16-613205-3 4 REQD
ME901-0218-0061 4 REQD (13) (28)
V36-788112-29 1 REQD ON -141 ASSY (12)
V36-788112-31 1 REQD ON -151 ASSY (12)
V36-788112-33 1 REQD ON -161 ASSY (12)
V36-788112-35 1 REQD ON -171 ASSY (12)
V36-788112-29 REF
V36-788112-33 REF
V36-788112-31 REF
V36-788112-35 REF
ME280-0010-0004 REF -141 ASSY ONLY
V36-331084 REF
INSTALL AS SHOWN
VOL A3, A4, A5 & A6 REF
-141, -151, -161, & -171 ASSY
102 102 101 100
(6) 120 PLACES AS SHOWN
1, 11, 13, 15, 17, 19, 21, 23, 25, 27, 29
TO BE STOWED IN UPPER (FWD) LOCATION
(6) .25 HIGH LETTERING 2 PLACES
(6) .38 HIGH LETTERING 2 PLACES
B5 B6 A3 A4 A5 A6 A9 ECU
+Zc +Yc
VIEW B-B 98
VIEW LOOKING AFT SHOWING
ME901-0218-0061 STOWAGE LOCATION
ME901-0218-0061 REF
MARKING DIAGRAM
30 PLACES
REVISIONS
A SEE REVISION RECORD 8-1-70 M. SIMMONS
B SEE REVISION RECORD 1-7-71 SIMMONS
C SEE REVISION RECORD 4-23-71 W.C.LOWE
D SEE REVISION RECORD 6-25-71 W.C.LOWE
FOR P/L SEE SHEET 1,2,3 & 4
FOR A/B SEE SHEET 1
FOR G/N SEE SHEET 4
J 03953 F01-100512
SCALE NONE SHEET 10
F01-100512 10 D
1M3

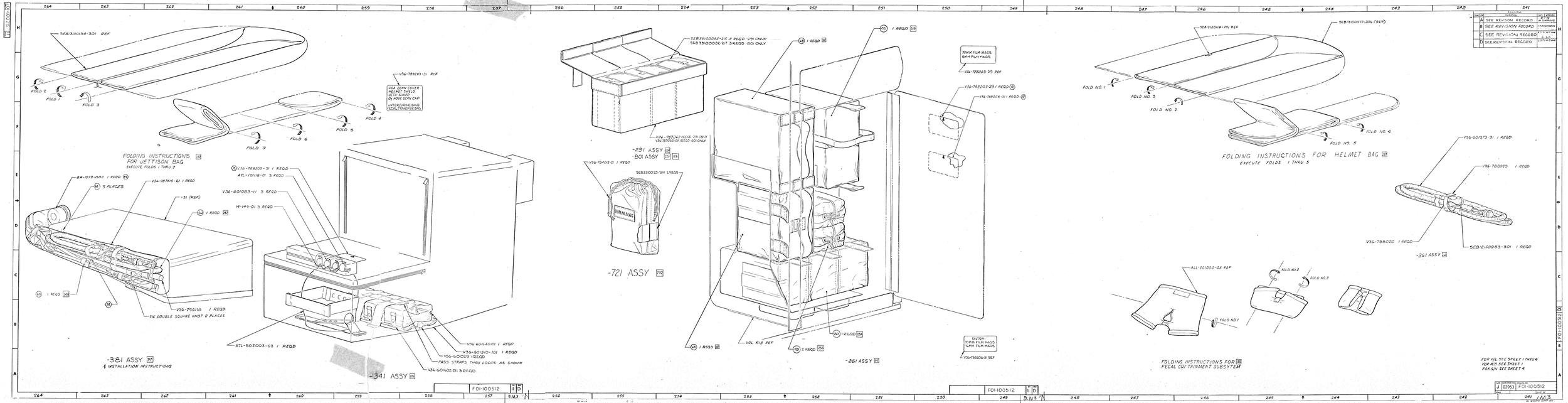
SEB3100134-301 REF
FOLD 1
FOLD 2
FOLD 3
FOLD 4
FOLD 5
FOLD 6
FOLD 7
V36-788203-31 REF
PEA CONN COVER
HELMET SHELF
UCTA CLAMP
Q2 NOSE CONN CAP
INTERJURINE BAG
FECAL TRANSFER BAG
FOLDING INSTRUCTIONS FOR JETTISON BAG
EXECUTE FOLDS 1 THRU 7
BW-1279-002 1 REQD
5 PLACES
V34-187810-61 1 REQD
-31 (REF)
1 REQD
1 REQD
V36-795116 1 REQD
TIE DOUBLE SQUARE KNOT 2 PLACES
-381 ASSY
INSTALLATION INSTRUCTIONS
V36-788203-31 1 REQD
A7L-101118-01 3 REQD
V36-601083-11 3 REQD
M-149-01 3 REQD
A7L-502003-03 1 REQD
V36-601640-101 1 REQD
V36-601510-101 1 REQD
V36-600029 1 REQD
PASS STRAPS THRU LOOPS AS SHOWN
V36-601632-211 3 REQD
-341 ASSY
SEB3100082-215 2 REQD -201 ONLY
SEB3100082-217 3 REQD -801 ONLY
V34-787062 10 REQD -201 ONLY
V36-601626-101 10 REQD -101 ONLY
-291 ASSY
-801 ASSY
V36-784003-21 1 REQD
SEB3100125-104 2 REQD
70MM FILM MAGS
-721 ASSY
1 REQD
1 REQD
1 REQD
2 REQD
1 REQD
VOL R13 REF
-261 ASSY
70MM FILM MAGS
16MM FILM MAGS
V36-788203-23 REF
V36-788203-291 1 REQD
V34-788204-311 1 REQD
ENTRY:
70MM FILM MAGS
16MM FILM MAGS
V36-788206-31 REF
SEB3100077-206 (REF)
SEB3100114-721 REF
FOLD NO. 1
FOLD NO. 2
FOLD NO. 3
FOLD NO. 4
FOLD NO. 5
FOLDING INSTRUCTIONS FOR HELMET BAG
EXECUTE FOLDS 1 THRU 5
V36-601373-31 1 REQD
V36-788020 1 REQD
V36-788020 1 REQD
SEB1210083-301 1 REQD
-361 ASSY
A7L-501000-09 REF
FOLD NO.1
FOLD NO.2
FOLD NO.3
FOLDING INSTRUCTIONS FOR FECAL CONTAINMENT SUBSYSTEM
FOR H/L SEE SHEET 1 THRU 4
FOR K/R SEE SHEET 1
FOR G/N SEE SHEET 4
REVISIONS
A SEE REVISION RECORD
B SEE REVISION RECORD
C SEE REVISION RECORD
D SEE REVISION RECORD
J 03953 FOI-100512
FOI-100512

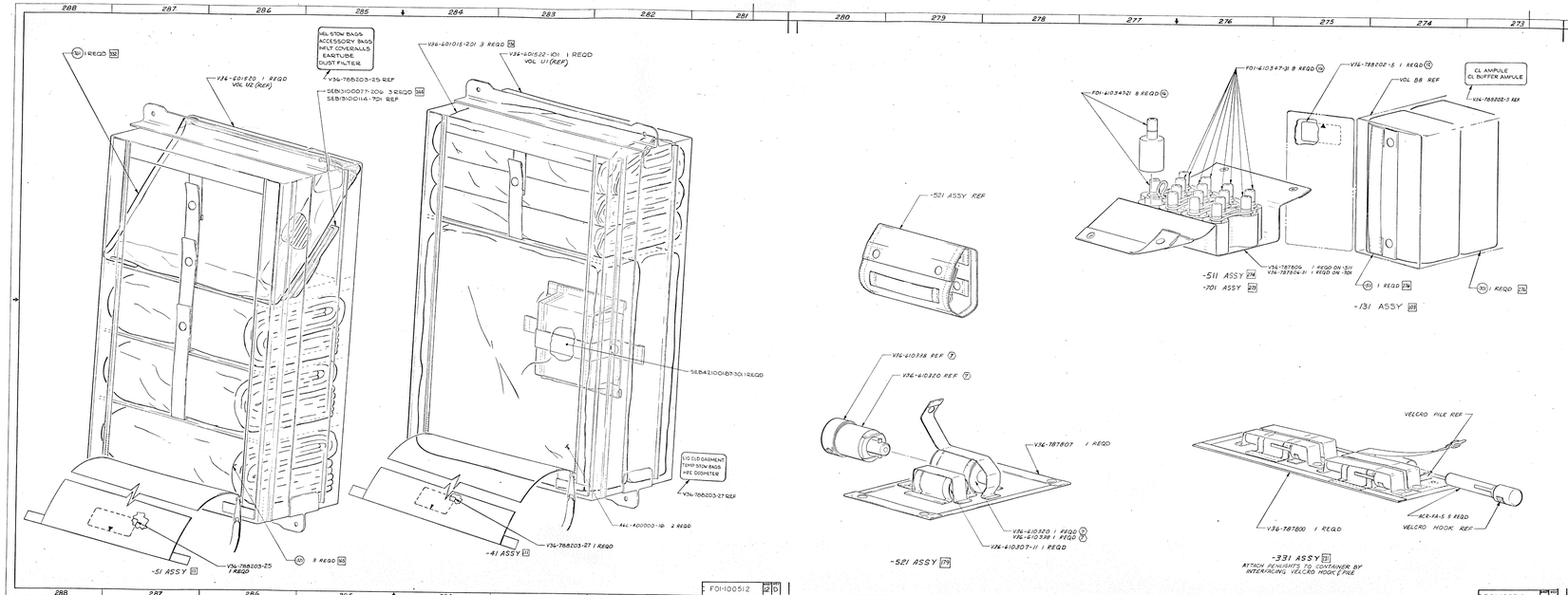

STEP 2

A. FAKE REMAINDER OF UMBILICAL INTO CONTAINER USING FIGURE B COILS AS SHOWN. COIL SUIT END IN FIRST, THEN EVA STATION END. SNAP IN PLACE WITH OUTER STRAP.

B. VERIFY THAT END FITTINGS & BELT ARE NESTED INSIDE COILS AS SHOWN TO PREVENT EXCESSIVE BULK WHEN CONTAINER IS CLOSED. ADJUST COILS (STEP 1-A) AS REQD.

C. CLOSE CONTAINER WITH ZIPPER & FLAP.

D. HANDLE ASSY WITH CAUTION WHEN TRANSPORTING TO INSURE THAT CONFIGURATION IS MAINTAINED.

STEP 1.

A. REMOVE PROTECTIVE COVER (V36-710140).

B. FOLD BELT & SECURE TO UMBILICAL AS SHOWN.

C. WITH CONTAINER IN POSITION SHOWN IN DIAGRAM, LAY UMBILICAL FULL LENGTH OVER CONTAINER WITH EVA STATION END TO THE RIGHT. POSITION UMBILICAL SO THAT CONTAINER END CLOSEST TO STAP ARE AT A POINT 10.0 FEET FROM SUIT END OF UMBILICAL.

D. FAKE UMBILICAL INTO CONTAINER BEGINNING WITH ONE FIGURE B COIL FACING EVA END, FOLLOWED BY ONE FIGURE B COIL FACING SUIT END. ADJUST COILS AS NECESSARY. MANUAL COILS TO INSURE THAT THERE IS NO TWISTING IN UMBILICAL. BE CERTAIN THAT COILS EXTEND TO EXTREME ENDS OF CONTAINER.

E. SNAP INNER STRAP AROUND THE TWO COILS (REF STEP 1-D)

F. VERIFY THAT THERE IS APPROX 5.0 FEET FREE LENGTH FROM INNER STRAP TO SUIT END OF UMBILICAL & APPROX 5.0 FEET FREE LENGTH FROM INNER STRAP TO EVA STATION END OF UMBILICAL.

FOR F/L SEE SHEET 1 THRU 4
FOR A/B SEE SHEET 1
FOR G/N SEE SHEET 4

REVISIONS			
A	SEE REVISION RECORD		
B	SEE REVISION RECORD		
C	SEE REVISION RECORD		
D	SEE REVISION RECORD		

NORTH AMERICAN AVIATION, INC.
SPACE AND INFORMATION SYSTEMS DIVISION

DWG SIZE	CODE IDENT NO	DRAWING NO	
	93553	F01-100512	
SCALE		SHEET OF	
		1	4

F01-100512 C

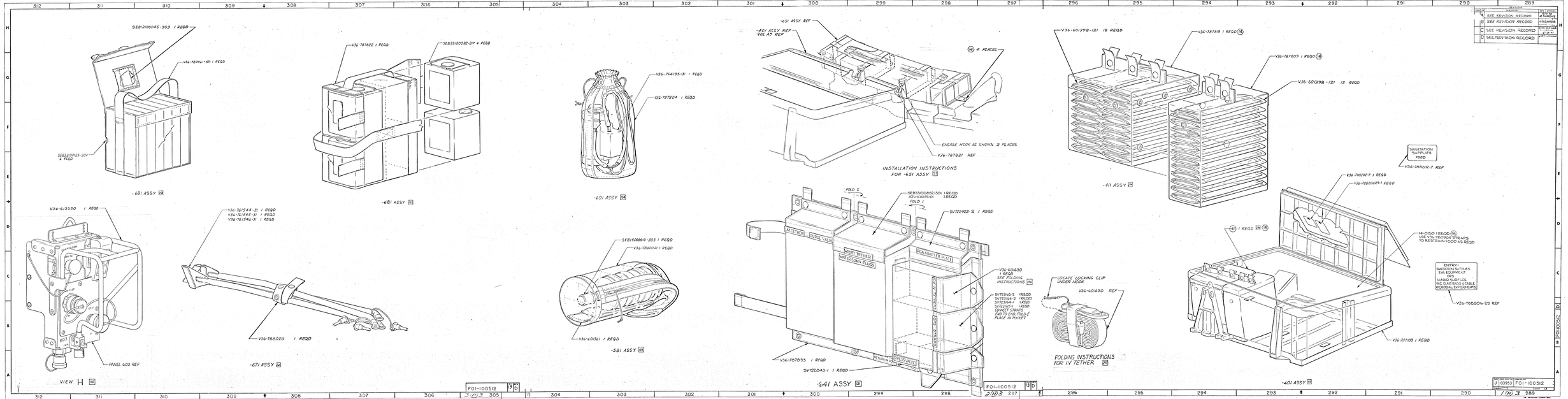

REVISIONS			
LTR	DESCRIPTION	DATE	APPROVED
A	SEE REVISION RECORD	1-15-70	JR SAMPSON
B	SEE REVISION RECORD	1-19-70	JR SAMPSON
C	SEE REVISION RECORD	2-11-70	J.R. SAMPSON
D	SEE REVISION RECORD	2-27-70	J.R. SAMPSON

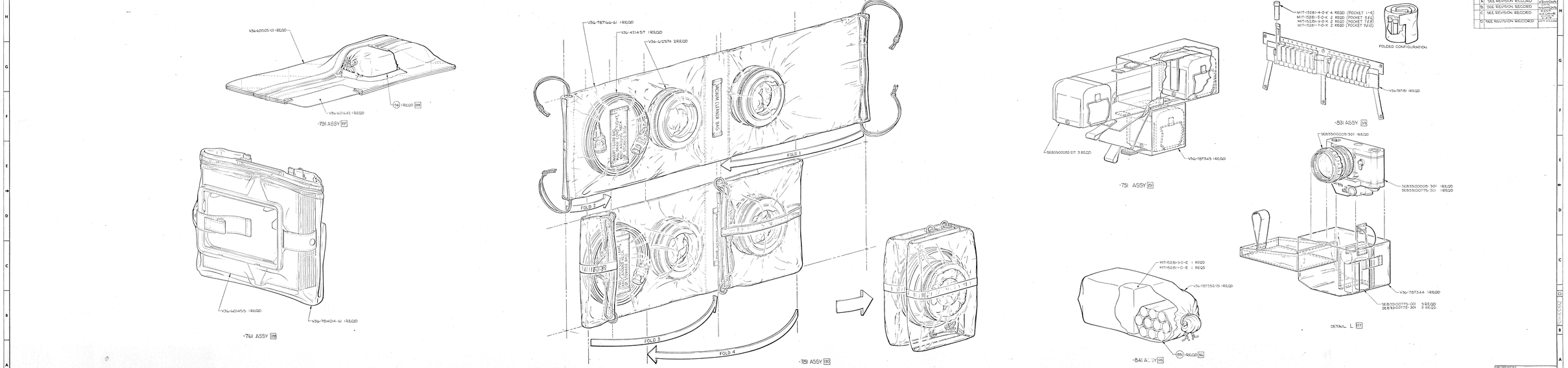

REVISIONS			
CHG LTR	DESCRIPTION	DATE	APPROVED
A	SEE REVISION RECORD	1-8-96	M.SAMPSON
B	SEE REVISION RECORD	1-15-96	M.SAMPSON
C	SEE REVISION RECORD	2-12-96	M.SAMPSON
D	SEE REVISION RECORD	2-12-96	M.SAMPSON

APPENDIX F

PORTIONS OF LM STOWAGE DRAWING

-11	-9	-7	-5	-3	-1	STOWAGE LOCATION	PART NO.	I&T	NOMENCLATURE OR DESCRIPTION	MATERIAL	GOVT SPEC	COML SPEC	STOCK SIZE	STOWAGE LIST NO REF	FINISH NO.	SH NO
2						DETAIL A	NAS673V13	E	BOLT	IND STD						11
		1	1		1	A2	LSC360-12-5-2		DATA STOR ELECTRONIC ASSY		LM11(41) & LM12(42)					13
2						DETAIL A	AN960D10		WASHER	GOVT STD				03005		12
																11
A/R						Q3LJ	SEE NOTE 19		SHIM		LM-11(41) ONLY					21
A/R						DETAIL B	GT835AR-32H		TAPE	GRUMMAN STD						
A/R						DETAIL B	GT835E-8		TAPE, DOUBLE COATED	GRUMMAN STD						11
2						DETAIL A	GB510F-3-14		BOLT	GRUMMAN STD						11
																11
1						—	LDW340-56750-1-1		PLATFORM INSTL	SEE DWG						
1						—	LDW340-51298-5	E	DOCKING TARGET INSTL							16
1						DETAIL A	LDW340-21374-3-7	S	SUPPORT ASSY							16
1						DETAIL A	LDW340M11631-13-1	E	SPACER							11
1						DETAIL A	LDW340M11631-11-1		SPACER							11
2						DETAIL A	LDW340M10547-1		WASHER							11
					1	Q3P	LDW340-60775 (REF)		PALLET, QUAD III PAYLOAD							11
1						A7	LDW330-60027-7		O_2 UMBILICAL ASSY (CMDR)		LM-10 (40) ONLY			03068		21
1						A7	LDW330-60027-5		O_2 UMBILICAL ASSY (LM PILOT)							12
					1	Q3L	LDW340-60720 (REF)		PALLET LRV AFT CHASSIS							12
1						—	LDW280-52901-5		HANDRAIL ILLUM. DISC. INSTL	SEE DWG	LM-10(40) ONLY			03067		29/21
4						Q3LJ	GB511J08-10		BOLT		LM-10(40) ONLY					16
4						Q3LJ	AN960D8L		WASHER		LM-10(40) ONLY					21
4						Q3LJ	GN510CT832		NUT		LM-10(40) ONLY					21
					1		LDW340-60002-11		PRE-STOWAGE INSTL							21
							-9		ABANDONED LM (REF)							
							-7		LM TO CSM TRANS ITEMS (REF) (SEE NOTE 2)							
							-5		LUNAR LAUNCH (REF)							
							-3		CSM TO LM (REF) (SEE NOTE 1)							
							LDW340-60002-1	E	EARTH LAUNCH							16

PROCESS OR FINISH	GRUMMAN SPEC OR MILITARY SPEC	SYM OR NO.	PROCESS OR FINISH	GRUMMAN SPEC OR MILITARY SPEC	SYM OR NO.	PROCESS OR FINISH	GRUMMAN SPEC OR MILITARY SPEC

I & T: IDENTIFICATION AND TRACEABILITY IN ACCORDANCE WITH : NONE

GRUMMAN AEROSPACE CORPORATION , BETHPAGE, L. I., NEW YORK

SIZE	CODE IDENT NO.		
B	26512	LDW340-60002	D

SCALE NONE SHEET 2.00

362

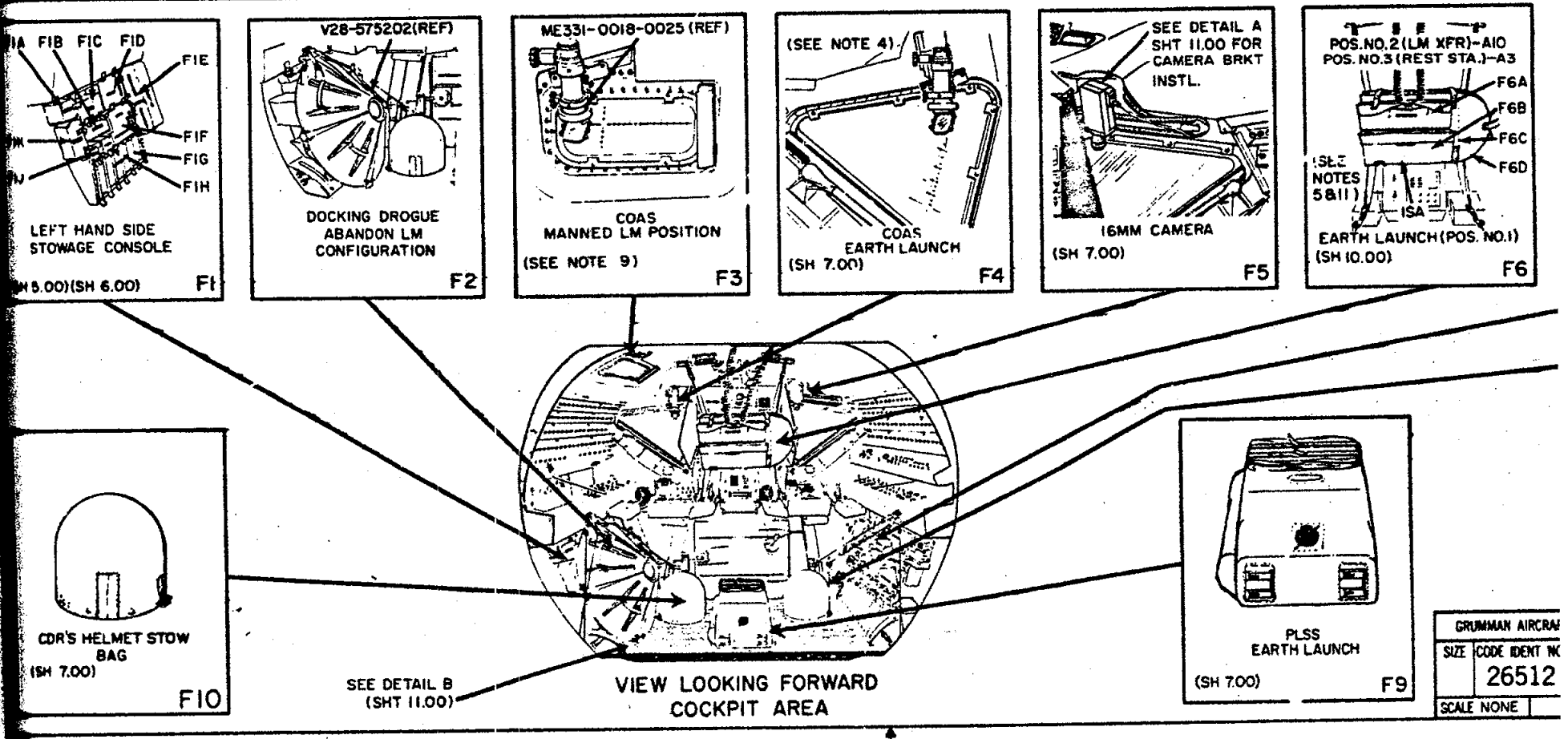
FIA FIB FIC FID
FIE
FIF
FIG
FIH
LEFT HAND SIDE STOWAGE CONSOLE
(SH 5.00)(SH 6.00)
F1
V28-575202(REF)
DOCKING DROGUE ABANDON LM CONFIGURATION
F2
ME331-0018-0025 (REF)
COAS MANNED LM POSITION
(SEE NOTE 9)
F3
(SEE NOTE 4)
COAS EARTH LAUNCH
(SH 7.00)
F4
SEE DETAIL A SHT 11.00 FOR CAMERA BRKT INSTL.
16MM CAMERA
(SH 7.00)
F5
POS.NO.2 (LM XFR)-A10
POS. NO.3 (REST STA.)-A3
F6A
F6B
F6C
F6D
(SEE NOTES 5&11)
ISA
EARTH LAUNCH (POS. NO.1)
(SH 10.00)
F6
CDR'S HELMET STOW BAG
(SH 7.00)
F10
SEE DETAIL B (SHT 11.00)
VIEW LOOKING FORWARD COCKPIT AREA
PLSS EARTH LAUNCH
(SH 7.00)
F9
GRUMMAN AIRCRAF
SIZE
CODE IDENT NO
26512
SCALE NONE

363

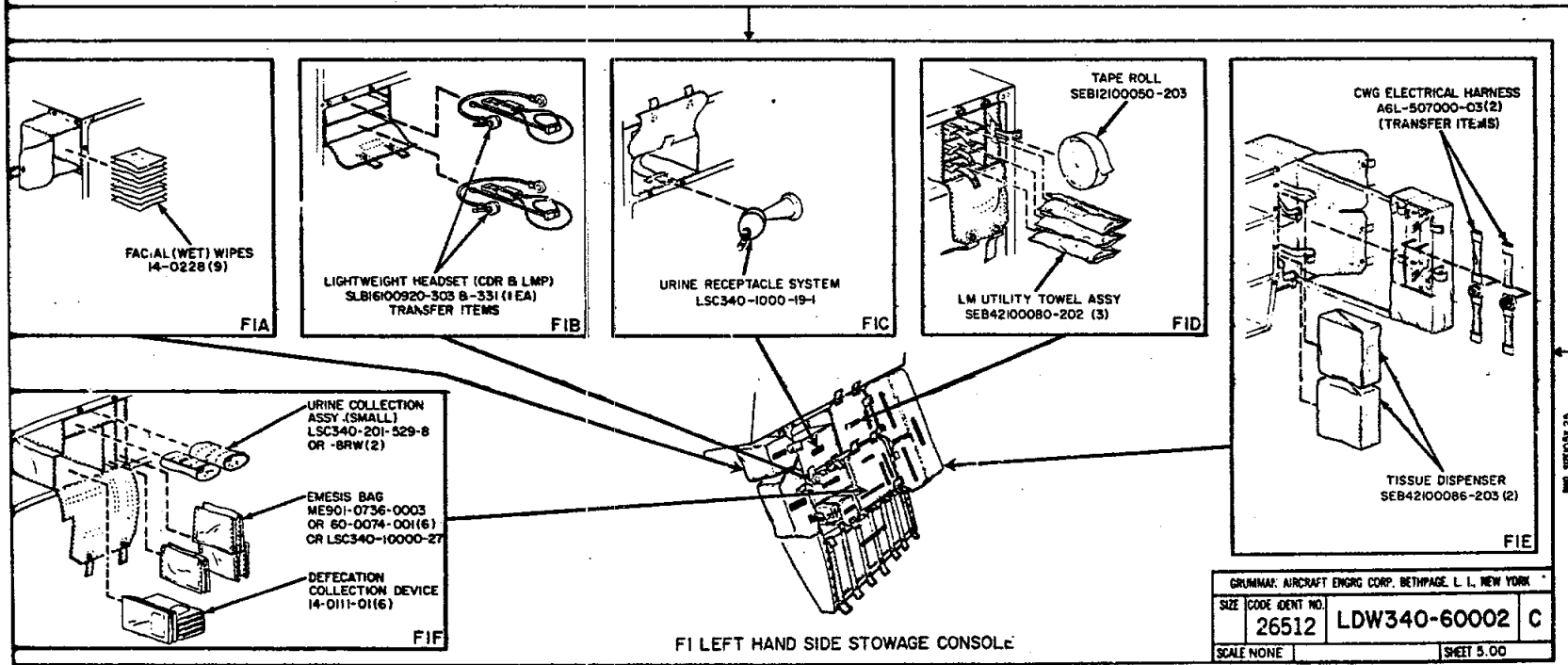

FI LEFT HAND SIDE STOWAGE CONSOLE

GRUMMAN AIRCRAFT ENGRG CORP. BETHPAGE, L. I., NEW YORK			
SIZE	CODE IDENT NO. 26512	LDW340-60002	C
SCALE NONE		SHEET 5.00	

DWG SIZE 10.5 x 25

PRINTING INFO ONLY

PRINT TRIM LINE

FULL SIZE SHEET AREA (11 X 25.5) — 2 SQ FT

1/4 SIZE SHEET AREA (1/4 OF FULL) — .5 SQ FT

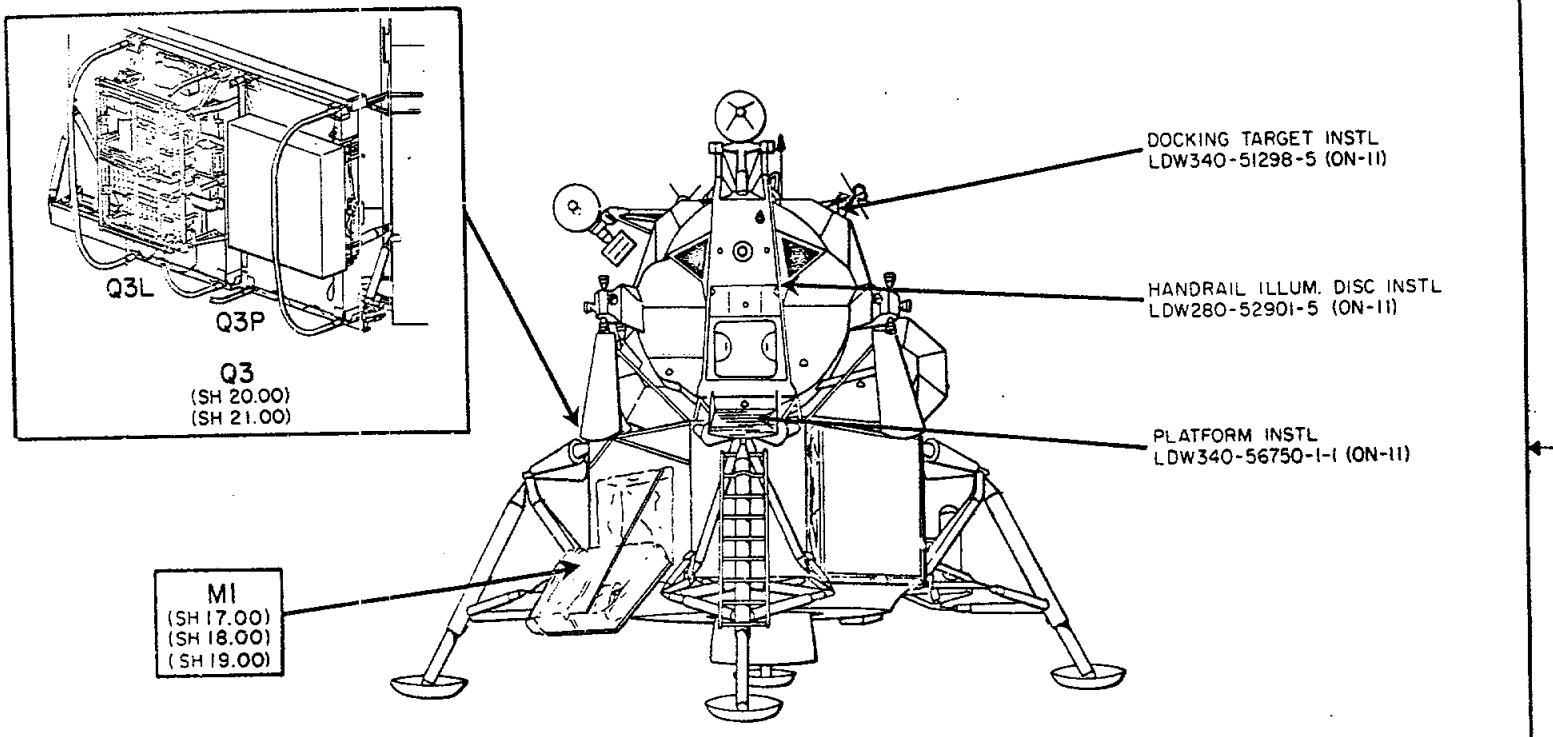

LDW340-60002-1 INSTL
LUNAR MODULE

LDW340-60002-11 INSTL
PRE-STOWAGE

GRUMMAN AIRCRAFT ENGRG CORP. BETHPAGE, L. I., NEW YORK			
SIZE B	CODE IDENT NO. 26512	LDW340-60002	B
SCALE NONE		SHEET 16.00	

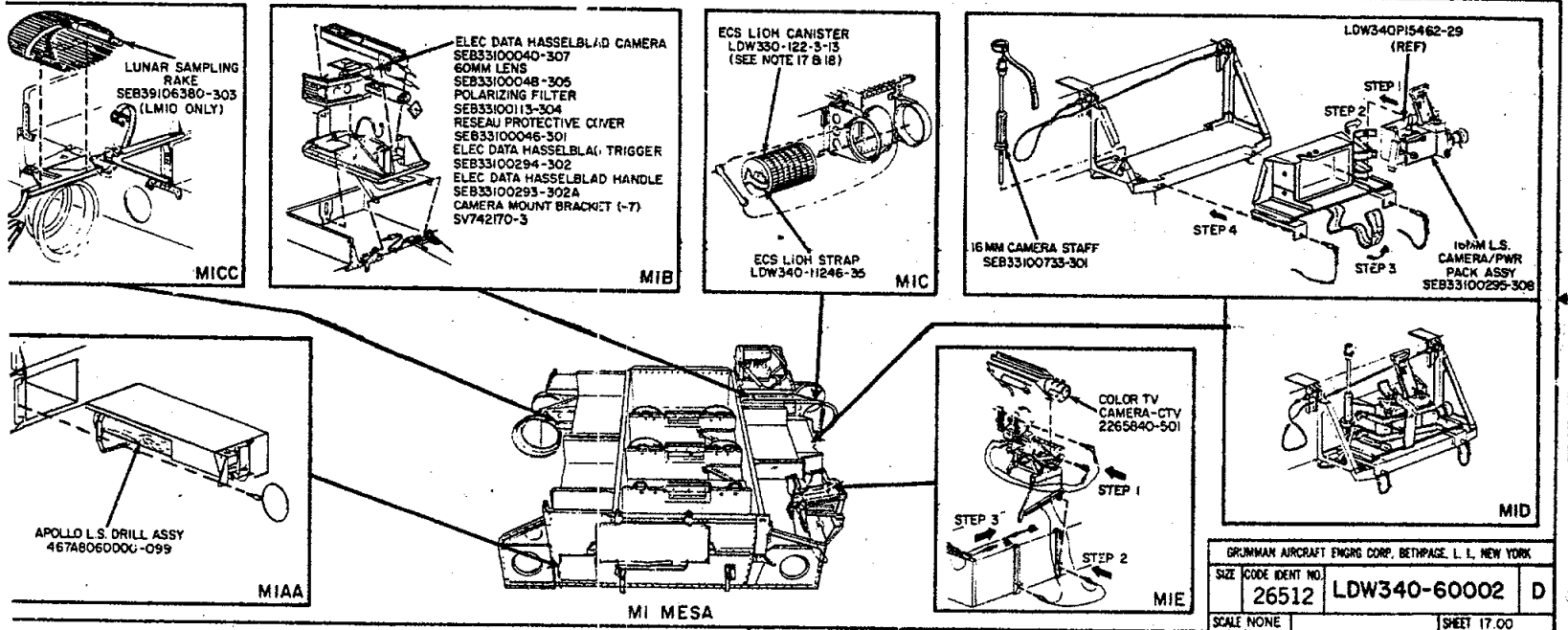
LUNAR SAMPLING RAKE
SEB39106380-303
(LM10 ONLY)
MICC
ELEC DATA HASSELBLAD CAMERA
SEB33100040-307
60MM LENS
SEB33100048-305
POLARIZING FILTER
SEB33100113-304
RESEAU PROTECTIVE COVER
SEB33100046-301
ELEC DATA HASSELBLAD TRIGGER
SEB33100294-302
ELEC DATA HASSELBLAD HANDLE
SEB33100293-302A
CAMERA MOUNT BRACKET (-7)
SV742170-3
MIB
ECS LIOH CANISTER
LDW330-122-3-13
(SEE NOTE 17 & 18)
ECS LIOH STRAP
LDW340-11246-35
MIC
LDW340P15462-29
(REF)
STEP 1
STEP 2
STEP 4
STEP 3
16 MM CAMERA STAFF
SEB33100733-301
16MM L.S. CAMERA/PWR PACK ASSY
SEB33100295-308
MID
APOLLO L.S. DRILL ASSY
467A8060000-099
MIAA
MI MESA
COLOR TV CAMERA-CTV
2265840-501
STEP 1
STEP 2
STEP 3
MIE
GRUMMAN AIRCRAFT ENGRG CORP. BETHPAGE, L. I., NEW YORK
SIZE
CODE IDENT NO.
26512
LDW340-60002
D
SCALE NONE
SHEET 17.00
DWG SIZE 10.5 X 25
PRINTING INFO ONLY
PRINT TRIM LINE

366

APPENDIX G

PORTIONS OF EVA LIFE SUPPORT SYSTEM ICD

REVISIONS A

1.0 SCOPE

1.1 Scope

This document establishes control of the interface functions for extra vehicular activity (EVA) of the oxygen umbilical, suit control unit (SCU), warning tone signal, intercom, the pressure control valve (PCV), the oxygen purge system (OPS), the purge valve, and the EVA pressure suit. System requirements are specified.

2.0 APPLICABLE DOCUMENTS

2.1 Applicability

The following documents of the most recent issue contribute to the definition of the EVA oxygen umbilical system interface and forma part of this document to the extent specified herein.

2.1.1 Non-Government Documents

Interface Control Documents

MH01-03325-436	Bioinstrumentation Systems Electrical Functional
MH01-21005-216	Communications - Systems Compatibility Personal
MH01-21041-136	Mechanical - J Series EVA Umbilical
MH01-21043-236	Electrical - J Series EVA Umbilical
MH01-21044-136	PGA and Mechanical Interface
MH01-21045-134	EVA Provisions - CM, SM and SIM Bay

Specifications

SD70-220 (SM 2A-03-BLOCK 2-J-(2))	Operational Procedures for J-Series Missions

2.2 Precedence

When the requirements of this document and the requirements of the documents referenced herein are in conflict, the requirements of this document shall govern.

REVISIONS A

3.0 REQUIREMENTS

3.1 Performance

The pressure garment assembly (PGA) in conjunction with the oxygen umbilical and SCU, and the PCV shall be the primary mode of sustaining the life of a crewman during EVA. The OPS in conjunction with the purge valve shall provide emergency backup oxygen purge flow to the EVA crewman in the event of a primary system failure. See Figure 1 for an illustration of the primary and backup oxygen purge flow systems:

3.2 Design Criteria

3.2.1 EVA Oxygen Umbilical, Suit Control Unit and Warning Tone

The EVA oxygen umbilical shall carry the oxygen purge flow from the EVA station (TP72) in the Command Module (CM) to the SCU which, in turn, is connected to the inlet suit connector of the PGA. Communication and instrumentation transmission shall also be provided by the oxygen umbilical. The SCU shall consist of a filter, a shutoff valve, an orifice pressure switch (low flow), an orifice, a suit pressure switch, and a suit connector. The function of the SCU shall be to meter the purge flow from the oxygen umbilical to the PGA and to alarm the EVA crewman when the PGA pressure is decreasing or the purge flow is decreasing. The purge flow to the PGA shall be within the following flow and pressure conditions with 100 plus or minus 5 psia at the umbilical inlet.

FLOW	TEMPERATURE	SUIT PRESSURE
10 to 12 lb/hour oxygen (corrected to 45°F)	0 to 75°F	3.70 to 4.00 psia (controlled by the PCV)

Tone Warning Input

During EVA, normal CSM audio warning tones to the EVA crewman are deleted. The suit pressure switch shall activate an alarm tone audible to the EVA crewman when his PGA pressure drops below 3.25 plus or minus 0.15 psig. The orifice pressure switch (low flow) shall activate the alarm tone when the orifice inlet pressure drops below 60.0 plus 5.0 minus 0.0 psig (indicating a purge flow of less than 6.0 lb/hour). While PGA pressure is below 3.25 plus or minus 0.15 psig or purge flow is less than 6.0 lb/hour, the warning tone continues unless shut off by the alarm switch on Panel 604. The warning tone signal shall be a 1.1 volt P-P minus zero percent plus 20 percent square wave at 750 Hz plus or minus 15 percent. Automatic reset shall be provided to shutoff the alarm tone when the EVA PGA pressure or the orifice inlet pressure has been restored above both respective switch activation pressures.

Operating Mode

During EVA, VOX intercom capabilities are provided when the control head is plugged into Panel 603.

NOTE: Continuous intercom and transmit capabilities exist when the control head is removed and the crewman communications umbilical is plugged directly into Panel 603 (thereby jumpering the intercom/transmit switch wires).

3.2.2 Pressure Garment Assembly

The PGA shall contain a habitable environment for the astronaut throughout the EVA operation. A nominal pressure of 3.70 to 4.00 psia shall be maintained within the PGA when operating on the primary system and 3.7 plus or minus 0.3 psia when operating on the backup system. A pressure drop not greater than 4.7 inches of water shall exist from PGA inlet to outlet (including hose connections) when 12 cfm oxygen is flowing through the suit at 3.5 psia and 50°F. The allowable suit leakage (including suit hose connections) when pressurized to 4.0 psia shall be 0.0315 lb/hour maximum.

3.2.2.1 Suit Relief Valve

The suit relief valve shall prevent over-pressurization of the PGA. Relief valve cracking pressure shall be 4.6 to 5.4 psia with reseat pressure 4.5 psia minimum (leakage less than 4 scc/min). The relief valve shall accommodate the maximum flow as specified in paragraph 3.2.1 and prevent the PGA internal pressure from exceeding 5.5 psia when operating in a vacuum environment.

3.2.3 Pressure Control Valve

The PCV shall consist of a suit connector, a pressure control valve, and a manual override shutoff valve. The function of the PCV shall be to control the pressure in the PGA during normal operation with the primary EVA system. The PGA pressure and flow rate shall be as follows:

PGA Pressure Control - 3.85 plus or minus 0.15 psig

Flow (Normal) - 10 to 12 lb/hour oxygen at 45°F

The PCV shall be designed so that, in the event the PCV fails open the PGA pressure shall not fall below 3.0 psia at the PGA inlet with a minimum umbilical flow of 10 lb/hour.

3.2.4 Oxygen Purge System

The OPS shall consist of high pressure oxygen storage bottles, a pressure gage, a fill fitting, a shutoff valve, a pressure regulator, and a suit hose and connector. The function of the OPS shall be to provide the back-up oxygen purge flow and PGA pressure control in the event of a primary system failure. The OPS shall maintain a PGA pressure of 3.7 plus or minus 0.3 psia while providing a nominal oxygen purge flow of 8.1 lb/hour. The OPS shall be capable of providing an 8.1 lb/hour oxygen purge flow for a minimum of 30 minutes.

3.2.5 Purge Valve

The purge valve shall consist of a suit connector, orifices, and a two position selector and override shutoff valve. The function of the purge valve shall be to meter the OPS backup system PGA oxygen purge flow rate to 8.1 lb/hour or 4.0 lb/hour nominal at a PGA pressure of 4.0 psia. The purge valve shall have the following flow performance with an inlet pressure of 4.0 plus or minus 0.05 psia, and oxygen inlet temperature of 90 F and discharging to a vacuum.

High flow position	8.1 plus or minus 0.3 lb/hour
Low flow position	4.0 plus or minus 0.2 lb/hour

3.3 Interface Criteria

The electrical interface of the J-series EVA umbilical shall be as defined in ICD MH01-21043-236. Communications compatibility shall be as specified in ICD MH01-21005-216. Bioinstrumentation functional requirements shall be as specified in ICD MH01-03325-436. The mechanical requirements for mounting and installation shall be as specified in ICD MH01-21041-136 and MH01-21044-136. The mechanical interface during the EVA is as specified in ICD MH01-21045-134.

APPENDIX H

CM VELCRO ICD

REVISIONS				
SYM	ZONE	DESCRIPTION	DATE	APPROVED
		1. MAY BE REWORKED 3. RECORD CHANGE 2. CANNOT BE REWORKED 4. NOW SHOP PRACTICE 5. PARTS MADE OK		

LBS
.001
.002
.010
.005
.003
.002
.002
.001
.0008
.010
.002
.003
.009
.057
.0013
.028
.0013
.006
.026
.002
.810
.006
.002
.016
.0002
.0002
.0004
.001
.001
.180#
540#

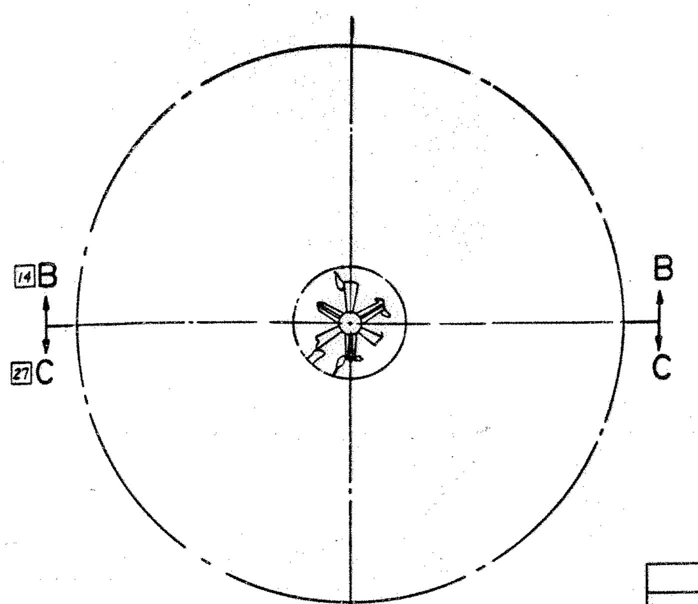

STOWED EQUIPMENT
NT BAY SECT E-E ZONES 6 & 7

D NO.	VELCRO ON GFE PART NO.	Xc	Yc	Zc	SIZE	NO. REQ	SQ IN	TYPE	LBS.
	SEB33100092				1x1	1	1	H500	.001
	SEB33100266				3/4x3/4	1	.375	H500	.0005
	SEB32100025				1x1	UN-KNOWN	20 MAX.	H500	.02 MAX
	SEB39104125				.5x.5	3	.75	NYLON HOOK	.0007
	SEB39104130				.5x.5	1	.25	NYLON HOOK	.0003
2001	SEB42100112	37.66	46.00	26.00	.5x1 / .5x1	6 / 6	3 / 3	P537 / H506	.003 / .003
	SEB42100086				1x2	2	4	H506	.004

TOTAL SQ. IN. = 32.27 ; TOTAL WT. = .0323

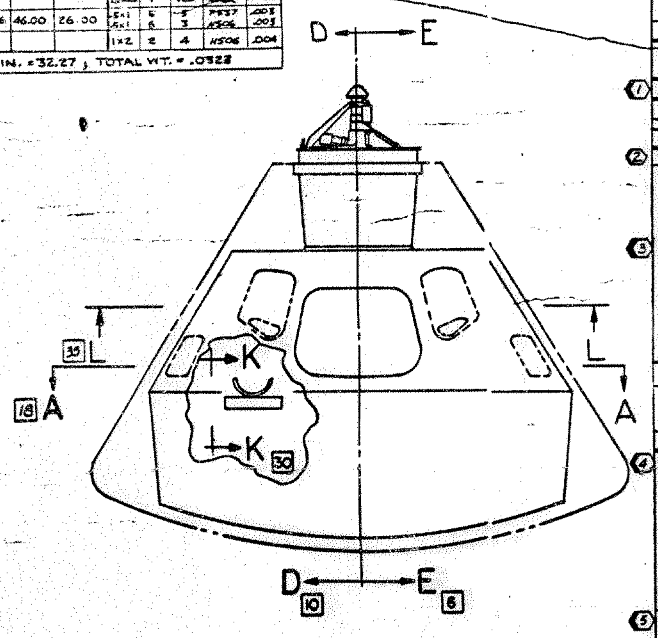

	COUCH AREA	VIEW K-K & T	ZONES 30 & 31					
	MOUNTING SURFACE PART NO.	MAT'L	P.537 VELCRO (PILE) LOCATION	SIZE	WEIGHT-LBS P.537 VELCRO	BOND PER NOTE 2	TOTAL	
122	1	811207 (WEBER)	AL TUBE & AL FTG	L.H. COUCH FR.	1x1	.001	.0005	.0015
123	2							
124	3							
125	4							
126	5	811207	AL TUBE	R.H. COUCH FR				
127	6	(WEBER)	& AL FTG					
128	7							
129	8							
130	9	811716-403	AL PL	L.H. FOOT PAN				
131	10	(WEBER)						
132	11							
133	12							
134	13	811716-403	AL PL	R.H. FOOT PAN				
135	14	(WEBER)						
136	15							
137	16				1x1	.001	.0005	.0015
238	16	ME901-0702	TRANSLATION CONTROLLER		1x1	.001	.0005	.0015
239	17				.5x.5	.0003	.0001	.0004
240	18			ROTATIONAL CONTROLLER	1x1	.001	.0005	.0015
				TOTAL SQ.IN = 18.25		TOTAL WT = .027		

NAR STOWED EQUIPMENT

AFT BULKHEAD SECTION A-A ZONES 18 & 19

	ITEM	STOWED IN: PART NO.	VELCRO ON: PART NO.	Xc	Yc	Zc	SIZE	NO. REQ	SQ.IN	TYPE	LBS
A	PLV DUCT TOOL POUCH	V36-331063	V36-611818	—	-21.00	-23.38	.5x10.3	3	15	H506	.015
			V36-601417	—	-21.00	-23.38			29	P537	.029
									33	H549	.033
B	HATCH CONT.		V36-601009	UNDER L.H. COUCH			1x7.2	10	72	P537	.072
							1x7.2	10	72	H549	.072
C	STOW. CONT.		V36-331065	—	29.75	6.00	1x1	1	1	P537	.001
				TOTAL SQ.IN. = 222						WT = .222	

GFE STOWED EQUIPMENT

L.H. EQUIPMENT BAY SECTION D-D ZONE 10

	ITEM	STOWED IN: PART NO.	VELCRO ON: GFE PART NO.	Xc	Yc	Zc	SIZE	NO. REQ	SQ.IN.	TYPE	LBS
1	1 FOOD SET	V36-601439	14-0123	48.50	-47.50	14.00	.5x.5	400	100	NYLON HOOK	.10
							TOTAL SQ.IN = 100, WT = .10				
	LOWER EQUIPMENT BAY		SECTION B-B				ZONES 14 & 15				
2	1 FOOD SET	V36-601437	14-0122	49.00	-26.43	38.62	.5x.5	306	76.5	NYLON HOOK	.076
	2 CAMERA		SEB33100055				1x1	1	1	H500	.001
	3 FILM MAG		SEB33100125				1x1	11	11		.011
	4 TAPE REC.		SEB33100264				1x1	1	1		.001
							1x.5	1	.5		.0005
5	5 SPOTMETER	V36-334064	SEB33100028	31.00	-28.25	37.25	1x1	1	1		.001
	6 MIRROR		SEB 33100051				.5x.5	1	.25		.0001
	7 LENS COVER		SEB 33100056				1"DIA	2	1.56		.0016
	8 RING SIGHT		SEB33100031				.4x.5	1	.2		.0002
	9 FILM MAG.		SEB33100068				1x1	5	5		.005
	10 CAMERA		SEB33100029	31.00	38.25	37.25	1x1	1	1		.001
				31.00	38.25	37.25	.5x1	2	1	H506	.001
							TOTAL SQ IN = 100.01; TOTAL WT = .10				
	AFT BULKHEAD		SECTION A-A				ZONE 18				
4	1 EMU MAIN.KIT	V36-331064	A6L-503000	—	27.00	22.50			5.50	P537	.006
									3.50	H506	.004
	2 COVERALLS (3)		BW-1043-003 OR BW-1043-004	—			1x2	3	6		.006
				—			1x6.25	6	37.5		.037
				—			1x9	6	54		.054
				—			3 1/2 DIA	6	49.4	H506	.049
				—			1x2	3	6	P537	.006
				—			1x6.25	6	37.5	P537	.037
				—	27.00	22.50	1x9	6	54	P537	.054
5	3 TISSUE DISP.	V36-331063	SEB42100086	—	-21.00	-24.00	1x2	5	10	H506	.010
	4 PENLIGHTS		ACR FA-5	—	-21.00	-24.00	1x.38	5	1.90	P537	.002
							TOTAL SQ.IN = 265.3, WT = .265				

	AFT BLKD	SECTION A-A	ZONES 18 & 19							
	MOUNTING SURFACE PART NO.	MAT'L	P-537 VELCRO (PILE) STATION NO. Xc	Yc	Zc	SIZE	WEIGHT-LBS P537 VELCRO	BOND PER NOTE 2	TOTAL	
66	1 V36-317001	.016 AL.SH	—	-8.50	15.00	1x12	.012	.006	.018	
67	2 AFT BLKD		—	-6.50						
68	3		—	-4.50						
69	4		—	4.50						
70	5		—	6.50						
71	6		—	8.50	15.00	1x12	.012	.006	.018	
72	7 V36-331003-391	.06 AL.PL	—	-21.38	28.30	1x1	.001	.0005	.0015	
73	8 BOX		—	-21.38	24.80					
74	9		—	-24.38	28.30					
75	10		—	-24.38	24.80					
76	11 V36-331003-361	.06 AL.PL	—	23.38	28.30					
77	12 BOX		—	23.38	24.80					
78	13		—	26.38	28.30					
79	14		—	26.38	24.80					
80	15 V36-311036	.12 AL.PL	42.66	-46.75	-9.67					
81	16 GIRTH FR.			-48.00	-14.32					
82	17			-48.00	-17.42					
83	18			-48.00	-20.42					
84	19			-43.50	-8.92					
85	20 V36-311037	.06 AL.PL		44.00	-9.12					
86	21 GIRTH FR.			44.00	-12.62					
87	22			44.00	-16.12					
88	23			46.75	-13.37					
89	24		42.66	46.75	-16.87					
142	25		42.66	50.75	-9.12					
143	26		42.66	50.75	-12.62					
92	27 V36-331312	.03 AL.SH	—	-25.50	-20.38					
93	28 PANEL		—	-25.50	-26.38					
94	29 V36-331315	.03 AL.SH	—	-16.30	-17.25					
95	30 PANEL		—	-16.30	-22.50					
96	31 V36-331314	.03 AL.SH	—	-15.56	-30.25					
97	32 PANEL		—	-14.75	-36.77					
98	33 V36-331332	.03 AL.SH	—	29.75	9.87					
99	34 PANEL		—	29.75	2.00					
100	35 V36-331326	.03 AL.SH	—	-15.80	-13.25					
101	36 PANEL		—	-15.80	-18.50					
102	37 V36-331324	.03 AL.SH	—	-15.44	-28.25					
103	38 PANEL		—	-14.96	-34.00					
104	39 V36-331327	.03 AL.SH	—	-26.76	-10.50					
105	40 PANEL		—	-26.76	-19.00					
106	41 V36-331325	.03 AL.SH	—	-26.5	-28.75					
107	42 PANEL		—	-26.05	-33.75	1x1	.001	.0005	.0015	
144	43 V36-613593	AL.SH	36.41	-3.00	-52.60	1x1	.001	.0005	.0015	
145	44		36.41	0.00	-52.60	1x1	.001	.0005	.0015	
146	45		36.41	3.00	-52.60	1x1	.001	.0005	.0015	
	CONTINUED - ZONE 24		TOTAL SQ.IN = 111				TOTAL WT = .167			
	HATCH AREA	SECTION C-C	ZONES 27 & 28							
108	1 V36-311024	AL.FORG.	ON LONGERON #3			1x1	.001	.0005	.0015	
109	2 V36-311024	AL.FORG.	ON LONGERON #4							
110	3 V36-311011-10	.03 AL.SH	51.17	32.25	—					
111	4 SKIN		47.17	32.25	—					
112	5		54.17	28.75	—					
113	6		50.17	28.75	—					
114	7		54.17	25.25	—					
115	8		50.17	25.25	—					
116	9 V36-311011-9	.03 AL.SH	54.17	-25.25	—					
117	10 SKIN		50.17	-25.25	—					
118	11		54.17	-28.75	—					
119	12		50.17	-28.75	—					
120	13		51.67	-32.25	—					
121	14		47.67	-32.25	—	1x1	.001	.0005	.0015	
147	15 V36-335006	.05 AL.SH	73.25	12.50	—					
148	16 PANEL		73.25	9.50	—					
149	17		73.25	-9.50	—					
150	18		73.25	-12.50	—					
151	19 V36-311189	AL.PL	52.66	3.00	—					
152	20 HATCH		52.66	-3.00	—					
153	21		45.44	-8.00	—					
154	22		45.66	-8.00	—					
155	23 V36-311035	.35 AL.PL	42.16	15.50	—					
156	24 GIRTH FR.			13.50	—					
157	25			11.50	—					
158	26			-11.50	—					
159	27			-13.50	—					
160	28		42.16	-15.50	—	1x1	.001	.0005	.0015	
	CONTINUED - ZONE 24		TOTAL SQ.IN = 28				TOTAL WT = .042			
	VIEW H, ZONE 30									
161	1 V36-311011-10	.03 AL.SH				1x1	.001	.0005	.0015	
162	2 SKIN					1x1	.001	.0005	.0015	
163	3 V36-311011-9	.03 AL.SH				1x1	.001	.0005	.0015	
164	4 SKIN					1x1	.001	.0005	.0015	
			TOTAL SQ.IN = 4				TOTAL WT = .006			

	R.H. EQUIP. BAY	SECTION E-E	ZONES 6 & 7							
	MOUNTING SURFACE PART NO.	MATL.	P537 VELCRO (PILE) STATION NO. Xc	Yc	Zc	SIZE	WEIGHT-LBS P537 VELCRO	BOND PER NOTE 2	TOTAL	
1	1 V36-335801	.05 AL.SH	69.80	18.00	27.56	1x1	.001	.0005	.0015	
2	2 V36-335835	.05 AL.PL	76.18		21.50					
3	3 DOOR PANEL		72.18		21.50					
4	4		68.18		21.50					
5	5 V36-335833	.05 AL.PL	76.18		9.30					
6	6 DOOR PANEL		72.18		9.30					
7	7		68.18		9.30					
8	8 V36-335802	.02 AL.SH	76.18		2.92					
9	9 DOOR PANEL		72.18		2.92					
10	10		68.18		2.92					
11	11 V36-335808	.05 AL.SH	72.18		-3.06					
12	12 PANEL		68.18	18.00	-3.06					
13	13 V36-332501	.04 AL.SH	47.87	42.00	-1.87					
14	14 PANEL		45.37		-1.87					
15	15 V36-332035	.05 AL.SH	39.90		19.55					
16	16 PANEL		30.40		19.55					
17	17		26.35		20.30					
18	18		16.85		20.30					
19	19		39.90		10.05					
20	20		30.40		10.05					
21	21		26.35		10.80					
22	22		16.85	42.00	10.80	1x1	.001	.0005	.0015	
138	23 V36-310007	.04 AL.SH	91.50	—	4.75	1x1	.001	.0005	.0015	
137	24 PANEL		91.50	—	-4.75	1x1	.001	.0005	.0015	
211	25 V36-611817	FABRIC				5x10.3	.015		.015	
	CONTINUED - ZONE 24		TOTAL SQ.IN = 39				TOTAL WT = .051			
	L.H. EQUIP. BAY	SECTION D-D	ZONE 10							
23	1 V36-333614	.05 AL.SH	62.15	-42.00	-2.25	1x1	.001	.0005	.0015	
24	2 PANEL		58.15		-2.25					
25	3 V36-333501	.04 AL.SH	45.42		-1.50					
26	4 V36-333609	.06 AL.SH	59.70		25.00					
27	5 PANEL		56.64		25.00					
28	6		59.70		28.38					
29	7		56.64		28.38					
30	8 V16-333007	.06 AL.SH	40.55		13.00					
31	9 PANEL		31.05		13.00					
32	10		25.57		13.00					
33	11		16.07		13.00					
34	12 V36-333011	.09 AL.SH	40.55		22.50					
35	13 PANEL		31.05		22.50					
36	14		25.57		22.50					
37	15		16.07	-42.00	22.50	1x1	.001	.0005	.0015	
140	16 V36-310007	.04 AL.SH	91.50	—	-4.75	1x1	.001	.0005	.0015	
141	17 PANEL		91.50	—	4.75	1x1	.001	.0005	.0015	
215	18 ME434-0045	.0063	12.50	—	-34.00	1x1	.001	.0005	.0015	
216	19 FLOODLIGHT		11.50	—	-37.00	1x1	.001	.0005	.0015	
217	20 V36-335601	AL.SH	34.00	18.00	24.50	.5x.5	.0003	.0001	.0004	
			TOTAL SQ.IN = 19.25				TOTAL WT = .029			
	LOWER EQUIP. BAY,	SECTION B-B,	ZONES 14 & 15							
41	1 V36-334509	.02 AL.SH	46.17	-31.31	33.00	1x1	.001	.0005	.0015	
42	2 DOOR PANEL		46.17	-26.31	33.00					
43	3		46.17	-21.31	33.00					
44	4		42.66	-31.31	29.50					
45	5			-26.31	29.50					
46	6			-21.31	29.50					
47	7 DOOR OPEN			-31.31	25.50					
48	8			-26.31	25.50					
49	9			-21.31	25.50					
50	10			-31.31	21.50					
51	11			-26.31	21.50					
52	12		42.66	-21.31	21.50					
53	13 V36-334614	.05 AL.PL	55.27	-16.44	33.00					
54	14 PANEL		50.27	-16.44	33.00					
55	15 V36-334607	.05 AL.SH	59.38	27.88	33.00					
56	16 PANEL		55.62	31.50						
57	17		59.38	31.88						
58	18		55.62	35.50						
59	19 V36-334127	.05 AL.PL	34.00	-36.00						
60	20 PANEL		30.00	-36.00						
61	21 V36-334101	.05 AL.PL	32.63	36.20						
62	22 PANEL		28.63	36.20						
63	23		24.63	36.20						
64	24		25.75	27.62						
65	25		25.75	31.62	33.00	1x1	.001	.0005	.0015	
	CONTINUED - ZONE 24		TOTAL SQ.IN. = 25				TOTAL WT. = .038			

TRANSIENT FIRE IGNITION POTENTIALS:
PGA SUIT; NYLON VELCRO ON SUIT FLAPS (P490 & H491): POSSIBLE CONTACT DURING DONNING & DOFFING WITH STRUT FLOODLIGHTS, WIRING & SWITCHES
PGA GLOVES; VELCRO (P537, H506, P490 & H491): POSSIBLE CONTACT WITH TV CAMERA, FLOODLIGHTS, WIRING & SWITCHES
PGA SHOES; VELCRO ON SOLES (H506): WATCHBAND; VELCRO (P537 & H506) & PEN CASING; VELCRO (H506): POSSIBLE CONTACT WITH FLOODLIGHTS & WIRING
C/M MOUNTED VELCRO (P537): TEMPORARY STOWAGE OF THE CONSTANT WEAR HEADSET

(2)(1) 4. INDIVIDUAL COMPARTMENT VARIATIONS IN VELCRO AREA IS ACCEPTABLE IF THE TOTAL AREA FOR FOOD AND HYGIENE ITEMS REMAINS AT 140 SQ.IN.

3. ALL DIMS ARE TRUE
2. NR BONDING IS NEOPRENE ADHESIVE PER MA0106-067
1. THIS DOCUMENT SPECIFIES TECHNICAL REQMTS BETWEEN ALL PARTIES AFFECTED HEREIN

NORTH AMERICAN ROCKWELL, CORP. SPACE DIVISION, DOWNEY, CALIF.

NATIONAL AERONAUTICS & SPACE ADMINISTRATION, MANNED SPACECRAFT CENTER, HOUSTON, TEXAS

NOTES: UNLESS OTHERWISE SPECIFIED

GRAND TOTALS	
GFE:	TOTAL AREA = 1039.35 SQ.IN TOTAL WT = 1.04 LBS
CFE (NAR):	TOTAL AREA = 503 SQ.IN TOTAL WT = .640 LBS

V36-3		CM SERIAL NO. 104	
MODEL NO.	PART NO.	DESCRIPTION	APPLICABLE SPECS

EFFECTIVITY AND SPECIFICATIONS

INTERFACE CONTROL DOCUMENT

UNLESS OTHERWISE SPECIFIED DIMENSIONS ARE IN INCHES. TOLERANCES ON DECIMALS ANGLES

THIS DOCUMENT SPECIFIES ... BETWEEN ALL PARTIES AFFECTED

DO NOT SCALE PRINT

DR BY G. WURZER 4-2-69

CHK BY

AUTH. SIGN.	REP	DATE
[signature]	NR	7-31-69
[signature]	MSC	7/24/69

NORTH AMERICAN AVIATION, INC. SPACE and INFORMATION SYSTEMS DIVISION 12214 LAKEWOOD BLVD., DOWNEY, CALIFORNIA

INTERIOR COMMAND MODULE PILE (VELCRO) LOCATIONS

CODE IDENT NO 03953 | SIZE J | MH01-03228-116

SCALE NONE | SHEET 1 OF 3

Card 1 of 9

MH01-03228-116
MH01-03228-116

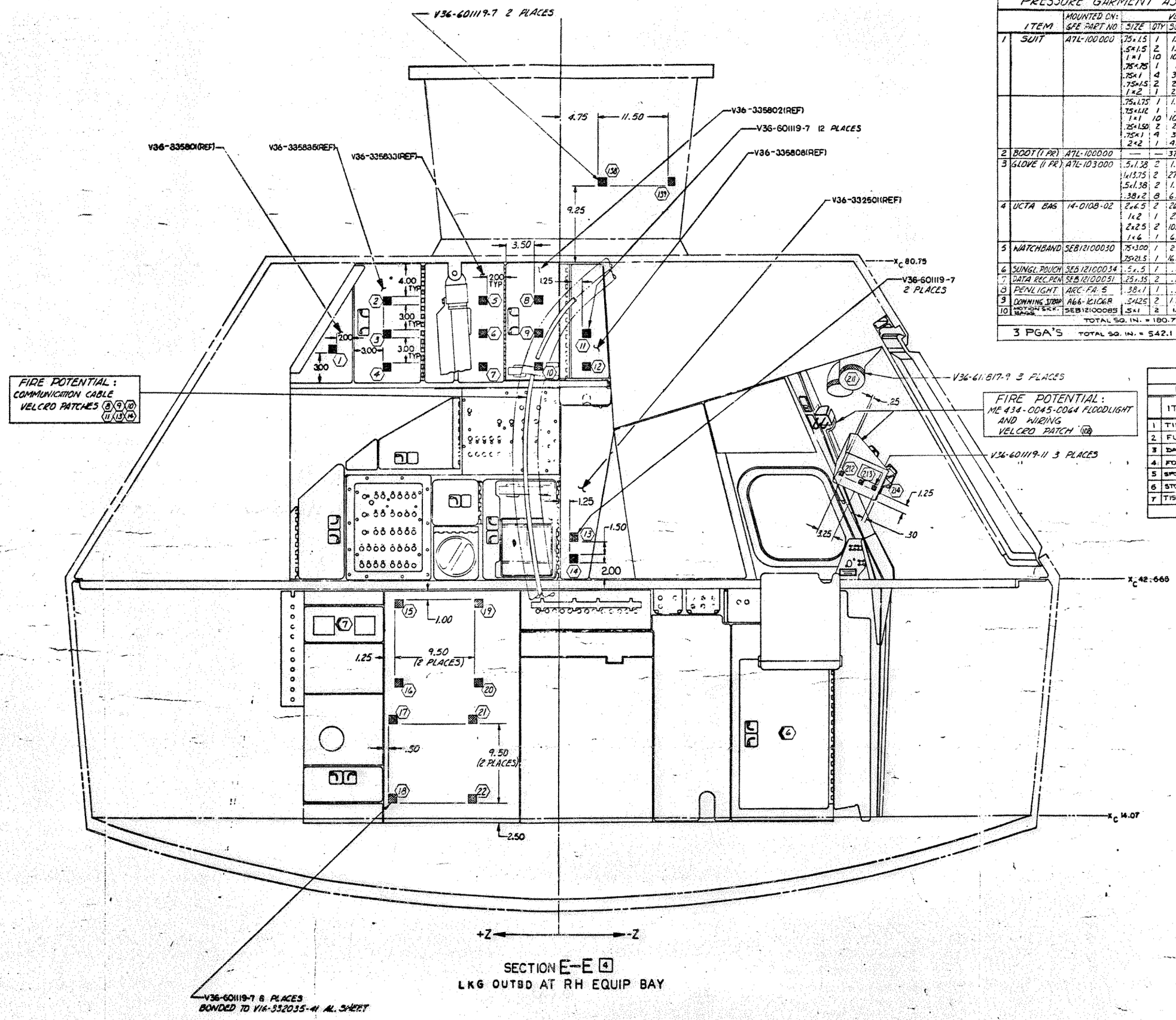

SECTION E-E 4
LKG OUTBD AT RH EQUIP BAY

PRESSURE GARMENT ASSEMBLY

ITEM		MOUNTED ON: GFE PART NO	VELCRO SIZE	QTY	SQ IN	PILE....HOOK	LBS
1	SUIT	A7L-100000	.75x1.5	1	1.12	NYLON PILE	.001
			.5x1.5	2	1.50		.002
			1x1	10	10.00		.010
			.75x.75	1	.56		.005
			.75x1	4	3.00		.003
			.75x1.5	2	2.25	NYLON PILE	.002
			1x2	1	2.00		.002
			.75x1.75	1	1.31	NYLON HOOK	.001
			.75x1.12	1	.89		.0008
			1x1	10	10.00		.010
			.25x1.50	2	2.25		.002
			.75x1	4	3.00		.003
			2x2	1	4.00	NYLON HOOK	.004
2	BOOT (1 PR)	A7L-100000	—	—	37.00	H506	.037
3	GLOVE (1 PR)	A7L-103000	.5x1.38	2	1.38	P537	.0013
			1x13.75	2	27.50	NYLON PILE	.028
			.5x1.38	2	1.38	H506	.0013
			.38x2	8	6.08	NYLON HOOK	.006
4	UCTA BAG	14-0108-02	2x6.5	2	26.00	NYLON HOOK	.026
			1x2	1	2.00	NYLON PILE	.002
			2x2.5	2	10.00	NYLON PILE	.010
			1x6	1	6.00	NYLON PILE	.006
5	WATCHBAND	SEB12100030	.75x3.00	1	2.25	NYLON HOOK	.002
			.75x21.5	1	16.2	NYLON PILE	.016
6	SUNGL. POUCH	SEB12100034	.5x.5	1	.25	H500	.0002
7	DATA REC. PEN	SEB12100051	.25x.35	2	.18	H500	.0002
8	PENLIGHT	ARC-FA-5	.38x1	1	.38	P537	.0004
9	CONNING STRAP	A66-10106R	.34x25	2	1.24	NYLON PILE	.001
10	MOTION SICK. BAGS	SEB12100085	.5x1	2	1.0	H500	.001
			TOTAL SQ. IN. = 180.7 ; TOTAL WT = .180#				
3 PGA'S			TOTAL SQ. IN. = 542.1 ; TOTAL WT = .540#				

GFE STOWED EQU

R.H. EQUIPMENT BAY SEC

	ITEM	STOWED IN PART NO.	VELCRO ON GFE PART NO.
1	TIMER		SEB33100092
2	FUSE		SEB33100266
3	DATA KIT		SEB32100025
4	FOOD		SEB39104128
5	SPOON PKG.		SEB39104130
6	STOW. BAG	V36-332001	SEB42100112
7	TISSUE DISP.		SEB42100086
			TOTAL

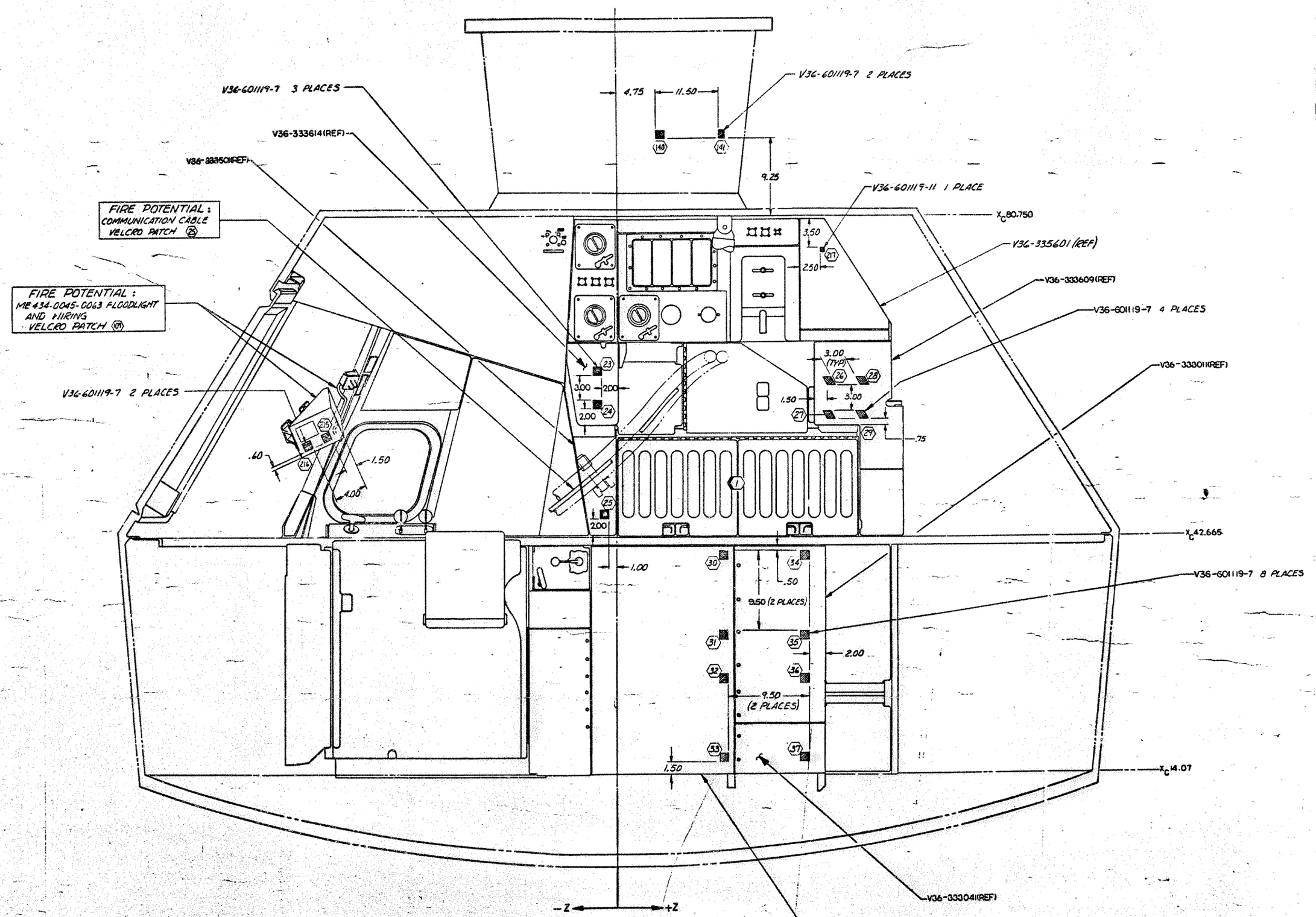

SECTION D-D 4
LKG OUTBD AT LH EQUIP BAY

REVISIONS				
ZONE	LTR	DESCRIPTION	DATE	APPROVED

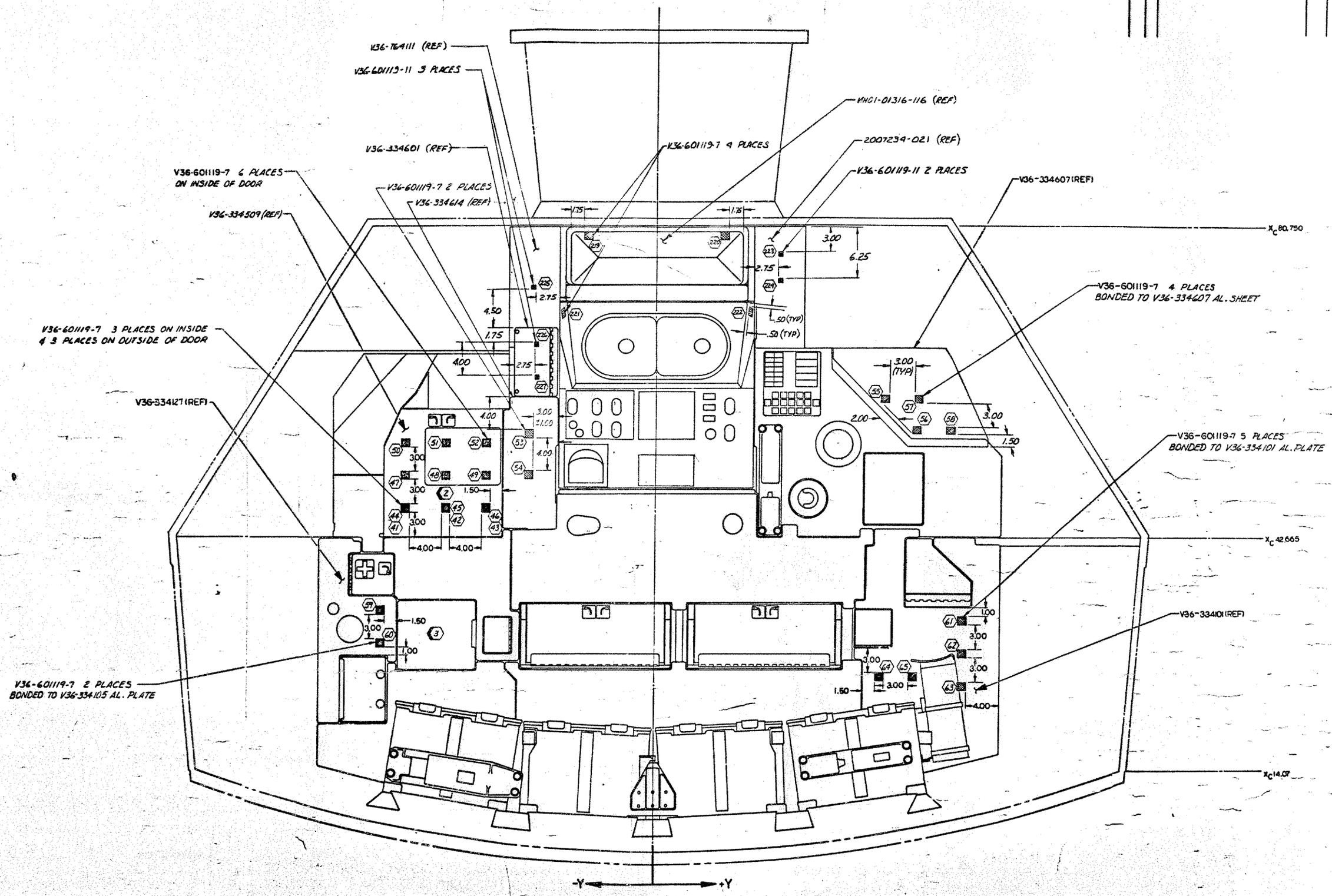

SECTION B-B [4]
LKG OUTBD AT LWR EQUIP BAY

NORTH AMERICAN AVIATION, INC.
SPACE AND INFORMATION SYSTEMS DIVISION
12214 LAKEWOOD BLVD., DOWNEY, CALIFORNIA

INTERIOR COMMAND MODULE
PILE (VELCRO) LOCATIONS

SIZE	CODE IDENT NO.	
J	03953	MH01-03228-116

SCALE — SHEET 2

MH01-03228-116

Card 4

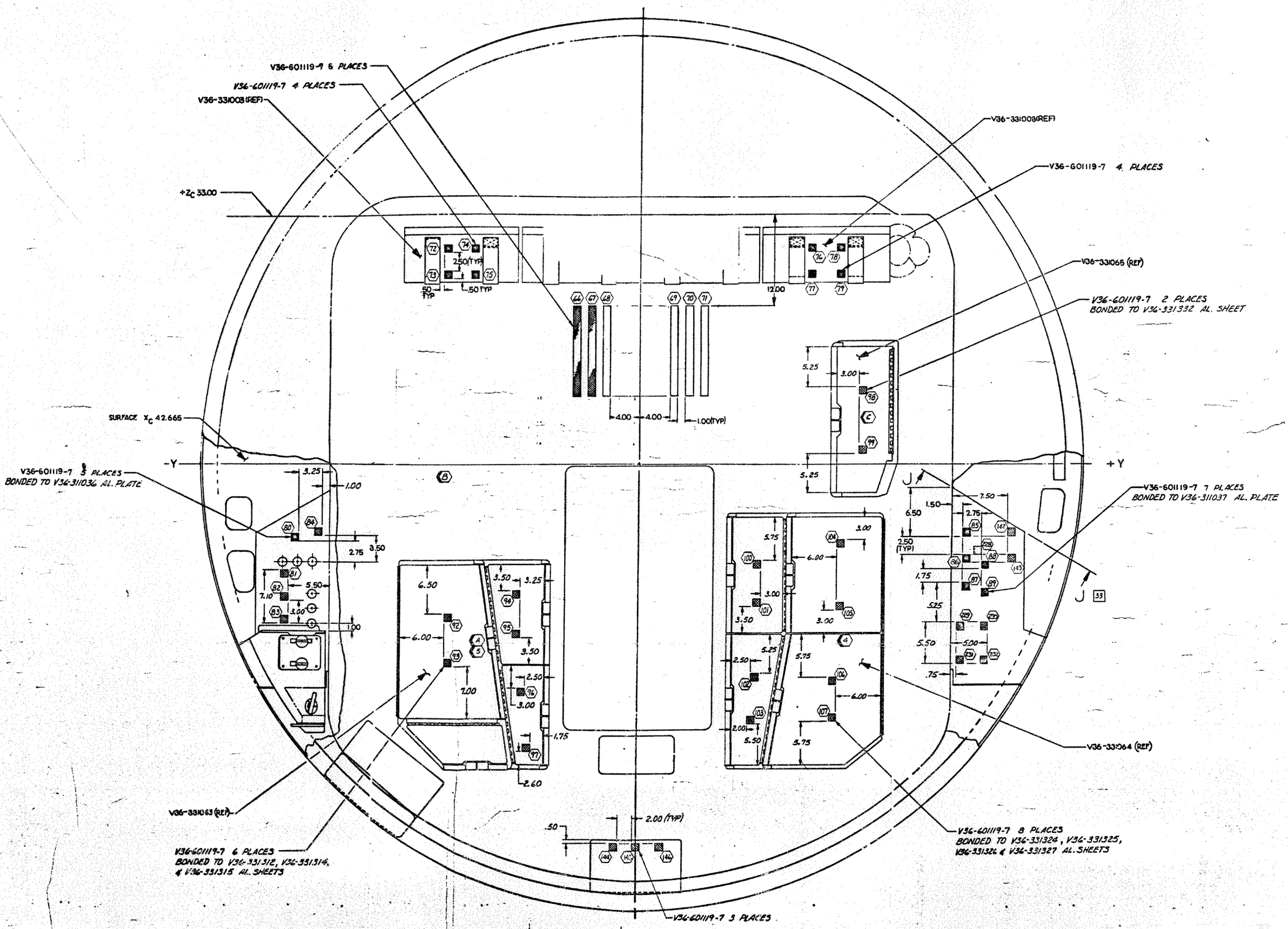

LKG AFT AT AFT BULKHEAD
SECTION A—A 4

214 | 213 | 212 | 211

H G F E D C B A

		MOUNTING SURFACE PART NO	MATL	PS37 VELCRO / PILE STATION NO X_c	Y_c	Z_c	SIZE	WEIGHT-LBS PS37 VELCRO	BOND NOTE 2	PER TOTAL
R.H. EQUIP BAY SECTION E-E ZONES 6 & 7										
212	26	ME434-005-0064		15.00	—	-33.50	.5x.5	.0003	.0001	.0004
213	27	FLOODLIGHT		12.00	—	-34.00	.5x.5	.0003	.0001	.0004
214	28			11.00	—	-37.00	.5x.5	.0003	.0001	.0004
				TOTAL SQ. IN. = .75				TOTAL WT = .001		
LOWER EQUIP BAY, SECTION B-B, ZONES 14 & 15										
219	24	MH01-013-116		79.00	-8.00	—	1x1	.001	.0005	.0015
220	27	G & N		79.00	8.00	—	↕	↕	↕	↕
221	28			70.00	-11.00	—	↕	↕	↕	↕
222	29			70.00	11.00	—	1x1	.001	.0005	.0015
223	30	2007234-002		77.00	15.00	—	.5x.5	.0003	.0001	.0004
224	31	MIT PANEL		74.00	15.00	—	↕	↕	↕	↕
225	32	V34-764111	AL. PL	73.00	-15.00	—	↕	↕	↕	↕
226	33	V36-334621	AL. SH	66.5	-14.5	—	↕	↕	↕	↕
227	34			62.5	-14.5	—	.5x.5	.0003	.0001	.0004
				TOTAL SQ. IN. = 5.25				TOTAL WT = .008		
AFT BLKD, SECTION A-A, ZONES 18 & 19										
228	46	V36-311057	.06 AL PL	42.66	45.00	11.00	1x1	.001	.0005	.0015
229	47	GIRTH FR		↕	43.00	21.00	↕	↕	↕	↕
230	48			↕	46.00	21.00	↕	↕	↕	↕
231	49			↕	43.00	26.00	↕	↕	↕	↕
232	50			42.66	46.00	26.00	1x1	.001	.0005	.0015
				TOTAL SQ. IN. = 5				TOTAL WT = .008		
HATCH AREA, SECTION C-C ZONES 27 & 28										
233	29	V36-335017	AL. SH	63.20	-17.60	—	1x1	.001	.0005	.0015
234	30	PANEL		61.94	-34.00	—	1x1	.001	.0005	.0015
235	31	ME127-005	FLOUREL	61.94	-21.38	—	.5x1	.0005	.0003	.0008
236	32	HANDHOLD		61.94	-27.88	—	.5x1	.0005	.0003	.0008
237	33	ON HATCH	MECH.	50.00	-17.50	—	.5x.5	.0003	.0001	.0004
				TOTAL SQ. IN = 3.25				TOTAL WT = .005		

V36-6
BONDED T

MH01-03228-116 SHEET 2

Cont 6

214 | 213 | 212 | 211

REVISIONS				
ZONE	LTR	DESCRIPTION	DATE	APPROVED

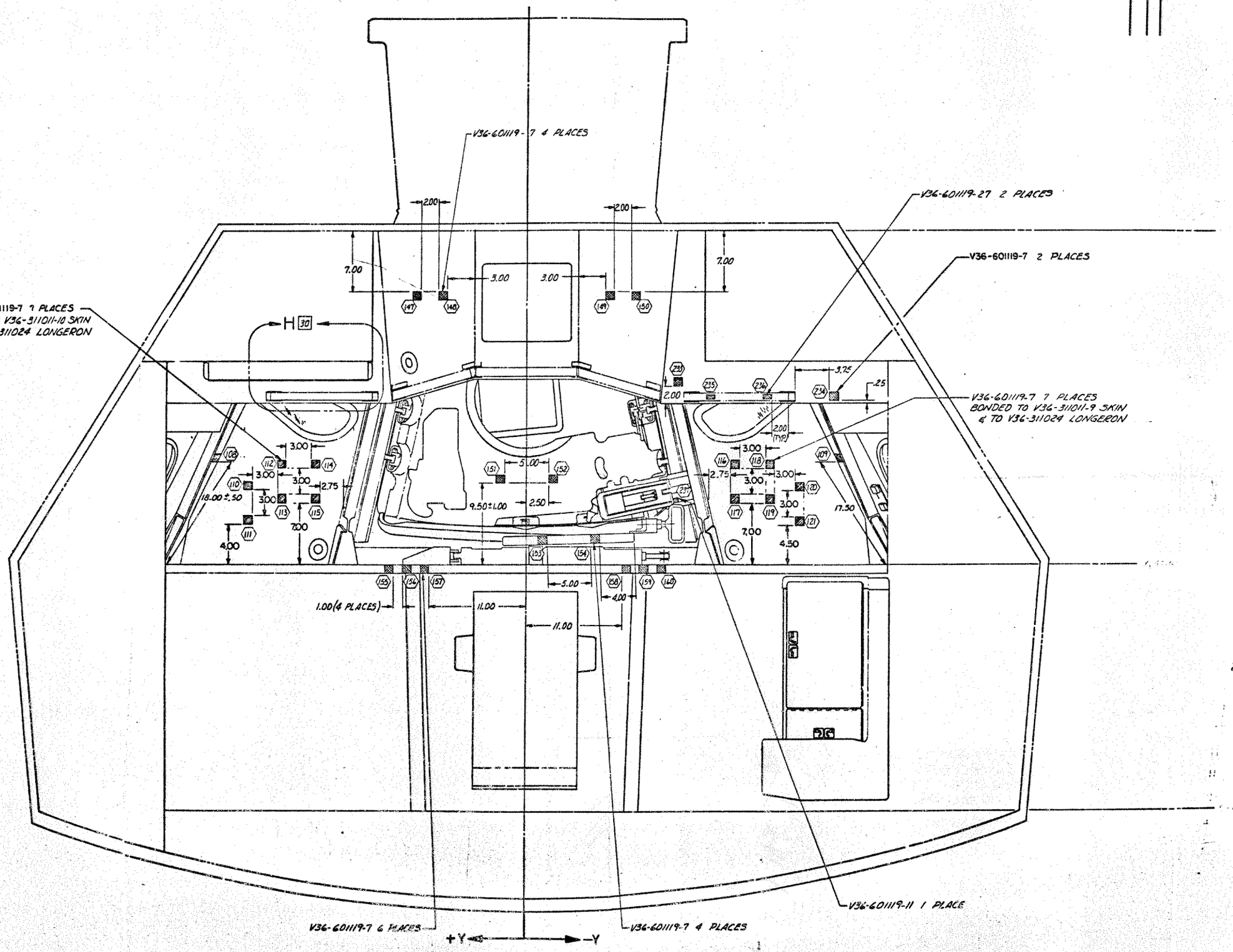

SECTION C-C
ROTATED 180°

NORTH AMERICAN AVIATION, INC.
SPACE and INFORMATION SYSTEMS DIVISION
12214 LAKEWOOD BLVD., DOWNEY, CALIFORNIA

INTERIOR COMMAND MODULE
PILE (VELCRO) LOCATIONS

SIZE	CODE IDENT NO.	
J	03953	MH01-03228-116

SCALE | SHEET 3

MH01-03228-116

Card 7

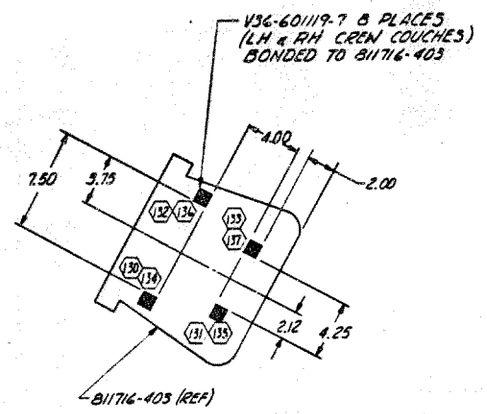

VIEW G-G 31

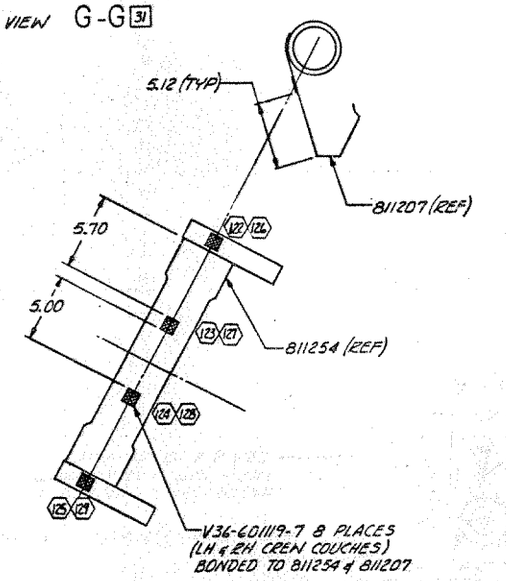

VIEW F-F 31

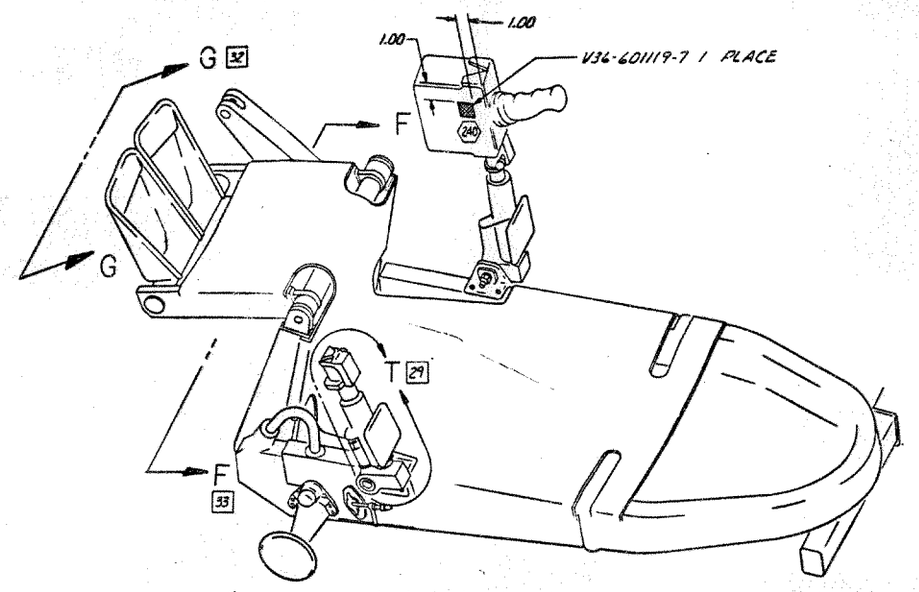

VIEW K-K 4

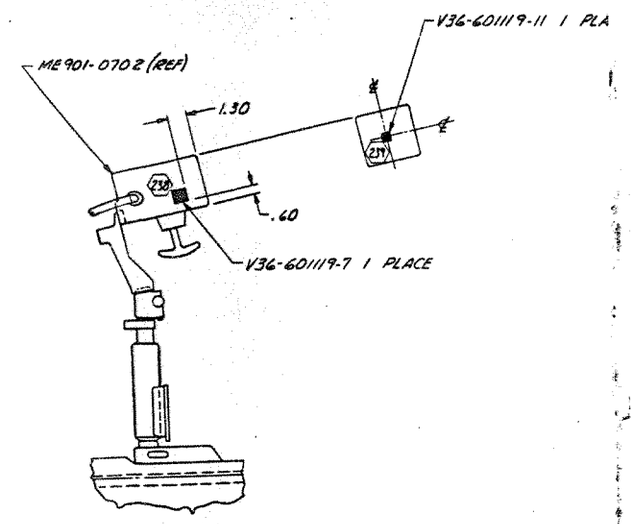

VIEW T 31
HAND CONTROLLER ADDED

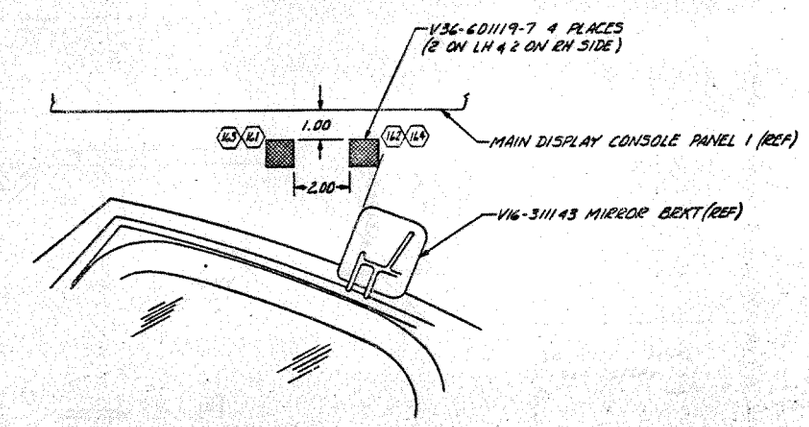

VIEW H 27
LOOKING OUTBD AT RH
RENDEZVOUS WINDOW
LH OPPOSITE

316 | 315 | 314 | 313

MAIN DISPLAY CONSOLE, SECTION L-L, ZONE 35

		MOUNTING SURFACE PART NO		LOCATION	P537 VELCRO (PILE) SIZE	WEIGHT - LBS P537 VELCRO	BOND NOTE 2	PER TOTAL
165	1	V36-761021		PANEL 1	.5x.5	.0003	.0001	.0004
166	2							
167	3							
168	4							
169	5							
170	6							
171	7							
172	8				.5x.5	.0003	.0001	.0004
173	9				.5x1.25	.0006	.0003	.0009
174	10				.5x1.25	.0006	.0003	.0009
175	11	V36-761022		PANEL 2	.5x.5	.0003	.0001	.0004
176	12							
177	13							
178	14							
179	15							
180	16							
181	17							
182	18							
183	19							
184	20							
185	21							
186	22							
187	23							
188	24							
189	25							
190	26							
191	27							
192	28							
193	29				.5x.5	.0003	.0001	.0004
194	30				.6x3.5	.002	.001	.003
195	31				.5x1.25	.0006	.0003	.0009
196	32				.32x.425	.0014	.0007	.0021
197	33				.12x.288	.0004	.0002	.0005
198	34				.12x.288	.0004	.0002	.0005
199	35				.32x.82	.0003	.0001	.0004
200	36				.32x.82	.0003	.0001	.0004
201	37	V36-761023		PANEL 3	.5x.5	.0003	.0001	.0004
202	38							
203	39							
204	40							
205	41							
206	42							
207	43							
208	44				.5x.5	.0003	.0001	.0004
209	45				.6x3.5	.002	.001	.003

CONTINUEL - NEXT CHART

MAIN DISPLAY CONSOLE, SECTION L-L, ZONE 35

		MOUNTING SURFACE PART NO		LOCATION	P537 VELCRO (PILE) SIZE	WEIGHT - LBS P537 VELCRO	BOND NOTE 2	PER TOTAL
242	47	V36-761021		PANEL 1	.5x.5	.0003	.0001	.0004
243	47							
244	48							
245	49							
246	50							
247	51							
248	52				.5x.5	.0003	.0001	.0004
249	53	V36-761022		PANEL 2	.5x.5	.0003	.0001	.0004
250	54				.32x.82	.0003	.0001	.0004
251	55				.32x.5	.0002	.0001	.0003
252	56				.5x.5	.0003	.0001	.0004
253	57				.5x.5	.0003	.0001	.0004
254	58				.5x.5	.0003	.0001	.0004
255	59	V36-761023		PANEL 3	.5x.5	.0003	.0001	.0004
256	60							
257	61							
258	62							
259	63							
260	64							
261	65							
262	66				.5x.5	.0003	.0001	.0004

MAIN DISPLAY CONSOLE, VIEW J-J, ZONE 33

210	67	V36-761024		PANEL 4	.5x.5	.0003	.0001	.0004
241	68				.5x.5	.0003	.0001	.0004
				TOTAL SQ.IN= 22.45		TOTAL WT= .036		

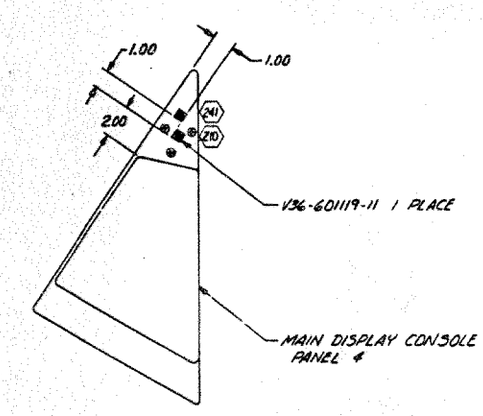

VIEW J-J 17

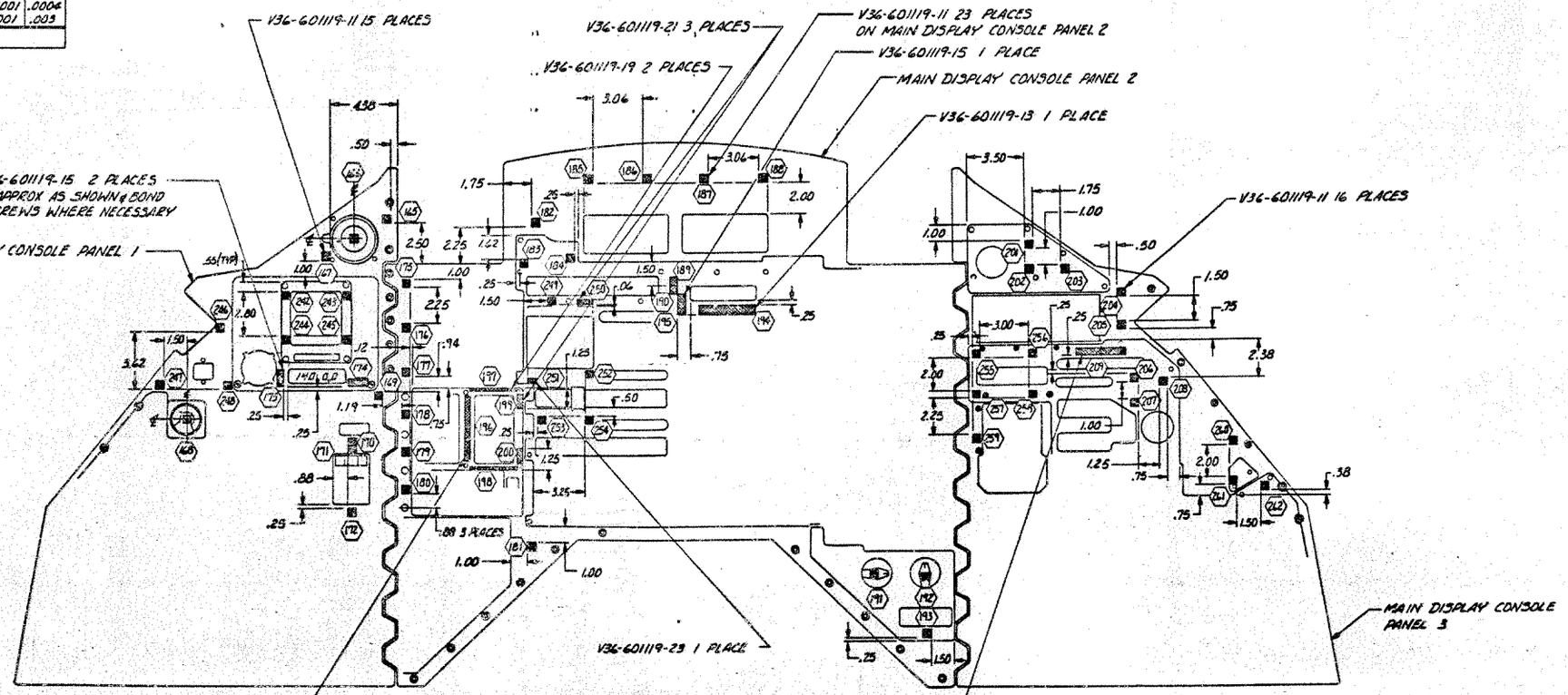

SECTION L-L 4

MH01-03228-116 | 3

316 | 315 | 314 | 313 Card 9

APPENDIX I

PORTIONS OF ICD ON PANEL CONTROLS (CM/LM CONTROL AND DISPLAY STANDARDIZATION)

3.0 REQUIREMENTS

3.1 General

This document is intended to achieve standardization of CSM/LM Control and Display Subsystem Panel Controls. The objective of standardization is improved crew efficiency. This is accomplished through the elimination of conflicting design features, thereby reducing the possibility of ambiguity arising from the operation of two vehicles by a common crew. All controls shall be operable by the crew while wearing a pressurized Apollo glove.

3.2 Objectives

3.2.1 Controls including toggles, rotaries, pushbuttons, continuous controls and circuit-breakers shall be standardized to the extent indicated herein. Standardization of controls to include, but not necessarily be limited to, the following areas:

(1) Control operation

(2) Control mounting and guarding

(3) Control orientation

3.2.2 Knobs shall be standardized to the extent indicated herein. Standardization of knobs shall include, but not necessarily be limited to, the following areas:

(1) design

(2) color

(3) shape coding

3.3 Design Requirements

3.3.1 Switches

3.3.1.1 Toggle Switches

Toggles may be two or three position, standard tab handle or leverlock handle and of momentary or maintaining switching action.

3.3.1.1.1 Operation

Toggle switch operating force shall be 10-160 ounces for all types. An axial pull of 44 plus 4 minus 20 ounces shall be required to release the toggle lever from a locked position. Total travel of the toggle lever shall be 34 plus or minus 6 degrees for all types.

3.3.1.1.2 Mounting and Guarding

The minimum allowable spacing between toggle switches grouped in horizontal rows shall be 0.9 inch on centers. When used in locations where the handle could pose a hazard to crew members, the switch shall be semi-recessed or provided with barrier guards or both as shown in Figure 1. The maximum distance between barrier guards shall not be more than 1.00 inch. Emergency switches or switches whose inadvertent actuation would create a hazardous condition shall have a leverlock handle or shall be protected by a guard.

3.3.1.1.3 Orientation

The preferred direction of toggle switch operation shall be vertical in preference to pilot axes.

TOGGLE SWITCHES

TYPICAL GUARDING TECHNIQUES

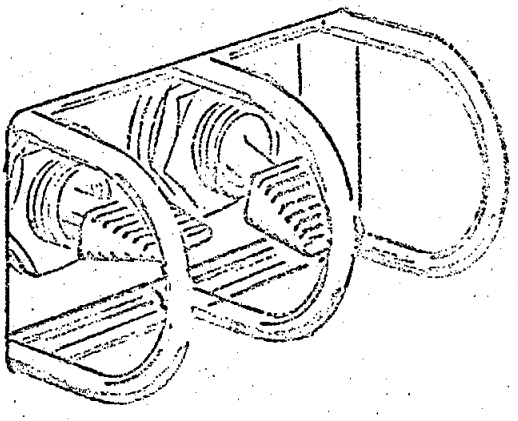

Recessed with Barrier Guard

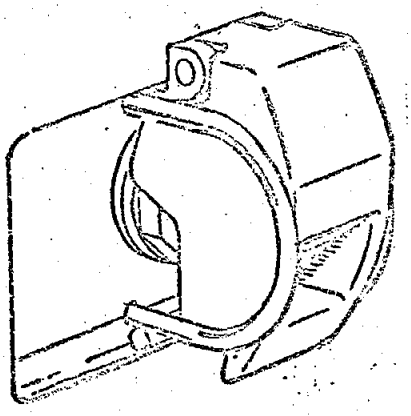

Recessed with Cover Guard

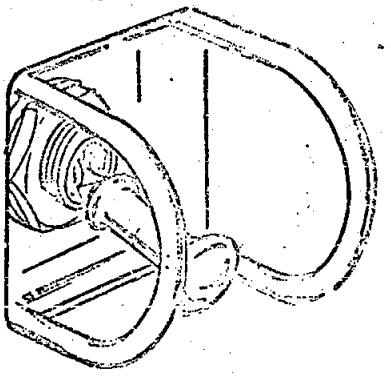

Leverlock with Barrier Guard

FIGURE 1

Position pairs by function shall be as follows:

up :	on	open	activate	increase	primary	deployed	auto
down :	off	close	deactivate	decrease	backup	stowed	manual

Where a third position is added for "off", the "off" should be in the center position except, where this would compromise equipment performance, in which case, "off" should be in the bottom position.

3.3.1.2 Rotary Switches

Rotary switches (two to twelve positions) may be used. Rotary switches shall be equipped with knobs conforming to paragraph 3.3.2 of this ICD.

3.3.1.2.1 Operation

Rotary switch throw distances between positions shall be 30 degrees. The torque required to turn the switch from one detent position to another shall be no less than 12 ounce-inches at breakout and no more than 120 ounce-inches just prior to dropping into the next detent position.

3.3.1.2.2 Orientation

The order of positions shall be such that clockwise movement is "on", "ascending order", increased performance, etc.

3.3.1.3 Pushbuttons

3.3.1.3.1 Operation

Pushbutton switches shall have a total displacement of .125 to .6 of an inch. Mechanical resistance to actuation of pushbutton switches shall be 10 to 85 ounces throughout the range. the range.

3.3.1.3.2 Mounting and Guarding

Pushbutton switches may be stacked vertically or horizontally on 1 inch centers. Stacked pusbuttons shall incorporate barrier guards between button to prevent inadvertent, simultaneous actuation of adjacent buttons. Pushbuttons whose inadvertent activation would create a hazardous situation for the crew or mission shall be provided with a locking mechanism, semi-recessed or otherwise suitably guarded.

3.3.1.3.3 Color

Color shall conform to the requirements of ICD MH01-05174-414.

3.3.1.3.4 Nomenclature

The nomenclature for all pushbutton switches shall be visible at all times and shall conform to the requirements of ICD MH01-05174-414.

3.3.1.4 Continuous Controls (Rotary Knob)

3.3.1.4.1 Operation

Rotation of the knob to the right shall result in an increase in the function being controlled. The torque required to reposition the knob shaft shall be 2 to 36 inch ounces.

3.3.1.4.2 Mounting

Continuous controls shall use the knobs described in paragraph 3.3.2 of this ICD.

3.3.1.5 Circuit Breakers

Circuit breakers shall generally be the "pop-out" - to-release, push-to-reset type. Switch type circuit breakers may be used where operation of specific equipment requires a switch type breaker. Circuit breakers shall be "trip-free" i.e., manually holding in a circuit breaker shall not override the circuit breaking function.

3.3.1.5.1 Operation

The tripped condition of the plunger type circuit breaker shall be indicated by a white (or silver gray) band which shall be a minimum of .15 inches wide.* The tripped condition of the switch type circuit breaker shall be indicated when the lever is in the "down" position. The force required to reset a plunger type circuit breaker shall not exceed 12 pounds. The force required to manually trip a circuit breaker shall not exceed 8 pounds.

3.3.1.5.2 Mounting

The minimum allowable space between circuit breakers grouped in horizontal rows shall be 0.6 inch on centers and the distance between rows shall be a minimum of 1.00 inch.

3.3.2 Knobs

*NOTE: On GARC circuit breakers the band is visible when breaker is closed as well as open.

3.3.2.1 Standard Knobs

Knob design shall employ a skirt at the base to facilitate knob index illumination. The knob design dimension shall be as follows:

(a) Knob length 1.75" to 2.00" nominal

(b) Skirt diameter 1.75" to 2.00"

(c) Overall height (knob plus skirt) 0.75" to 0.85"

(d) Skirt thickness 0.060" to 0.080"

(e) Index mark width 0.050" to 0.065" nominal

3.3.2.2 Knob Color

The color of standard knobs and recessed knobs shall conform to the requirements of ICD MH01-05174-414.

( )

4.0 DEFINITIONS

4.1 Dimensions - The dimensions called out herein do not consider manufacturing tolerances.

APPENDIX J

RESULTS OF NASA/NORTH AMERICAN ROCKWELL MOCKUP MEETING

PD8/L821-JC22-69-223
Contract NAS 9-150

2/27/69

Mr. Milton I. Drucker
Director, Apollo CSM Program Contracts
Space Division
North American Rockwell Corporation
Downey, California 90241

Dear Mr. Drucker:

This letter is of particular interest to Messrs. C. Feltz, J. Carney, and C. Helms.

Reference is made to NR letter 68MA6083, dated August 23, 1968, subject: Mockup Update and Maintenance, Memorandum of Understanding (MOU).

A signed MOU, including revisions to the original referenced MOU, is enclosed for NR implementation. These revisions have been informally coordinated with Mr. J. Carney, NR. Confirmation of Contractor intent to utilize this document is requested.

Sincerely yours,

(original signed by)

A. H. Atkinson
Contracting Officer
Spacecraft Contract Section

Enclosure

cc:
NR-Houston

bcc:
JC23/G. A. Abbott
PA/G. M. Low
PA/K. S. Kleinknecht
PA2/ASPO files
PC/W. H. Gray
PF/A. Cohen
PP5/R. C. Hood
CF23/T. Barrow
CF131/C. Perner
PP5/R. Stultz
PA/G. W. Abbey

PD8:JRGoodman:jw 2/24/69

MEMORANDUM OF UNDERSTANDING
MOCKUP AND TRAINER UPDATE AND MAINTENANCE
February 1969

It is mutually agreed that the definitions and procedural ground rules described herein shall constitute the basis for the implementation of performance and the administration of contractual commitments governing the update and maintenance of delivered mockups and trainers.

Mockups and Trainers Affected:

MSC-1	Astronaut Crew Trainer for CM Interior Exercises
MSC-2	Astronaut Crew Trainer for CM Interior and Exterior EVA Exercises
KSC-E	Astronaut and Ground Operations Personnel Trainer for Emergency Egress Exercises
Mockup 27A	Astronaut Crew Trainer for CM and LM Docking Hardware
Mockup 27B	Astronaut Crew Trainer for CM and LM Docking Hardware
CMS-1	Command Module Simulator
CMS-2	Command Module Simulator
CMS-3	Command Module Simulator
WIF	Water Immersion Facility
Zero G	Test Hardware
-----	Miscellaneous Training Hardware

Scope

1. Whenever the command module interior configuration, EVA hardware provisions or the stowage of loose equipment is changed in any flight article so as to affect or modify interfaces with a flight crew member or significantly affect crew member performance, such hardware and/or data change(s) shall be considered by the NASA and NR for incorporation by the NASA into each mockup and trainer as listed above subsequent to the baseline established by CCA 2548 (for mockups MSC-1, MSC-2, and KSC-E) and CCA 1229A (for mockups 27A and 27B).

2. Mockup and trainer changes may result but not necessarily be limited to the following Apollo Spacecraft Program activities:

   a. Change Panel/Board

   b. Crew Station Review (CSR)

   c. Critical Design Review (CDR)

   d. Crew Compartment Fit and Function (CCFF) at KSC

3. The following matrix guide identifies vehicle configuration updates for mockups and trainers to be specified by CCA:

	SPACECRAFT										
ARTICLE	106	107	108	109	110	111	112	113	114	115	115A
MSC-1		X		X		X		X		X	
*MSC-2	X		X		X		X		X		X
KSC-E	X	X	X	X	X	X	X	X	X	X	X
27A & 27B	X	X	X	X	X	X	X	X	X	X	X
CMS 1,2,3											
Zero G	Configurations as defined and directed by CCA										
WIF											

*EVA provisions for each configuration shall be maintained on MSC-2, i.e., handholds, handrails, EVA lights, etc.

4. <u>Fidelity Requirements</u>

   Mockup and trainer configuration and the supporting hardware are to meet flight hardware specifications relating to dimension, tolerance, form, fit and function in all areas affecting flight crew member interfaces or performance.

   a. Generally, hardware for mockups and trainers will be fabricated in NR's model shop. However, consideration will be given by NR to supplying on-line production flight hardware to meet delivery requirements where model shop production, fabrication, or procurement time is such that it will not support NASA need dates, provided use of production hardware is acceptable to NASA and does not impact spacecraft schedules.

b. Material substitutions will be permitted as long as the substitution does not substantially alter the operational characteristics of the replaced material or adversely affect its useful life. Examples of acceptable substitutions are nylon in lieu of beta or other fire-proof materials used for bags, covers, closeouts, etc; different grades of aluminum used other than that specified for flight hardware; aluminum substituted for steel and wood for metal in discrete applications. Paint may be substituted for anodized finishes required on stowage containers and wire trays. Substitutions will not be permitted in functioning mechanical systems where such substitutions would affect operating forces or wear characteristics.

c. Inspection will be limited to the level necessary to insure each specific part meets the requirements of its planned usage. The level of inspection will be defined on the prints by NR. NASA Quality Control will not be required unless specifically directed by the NASA, except for the DD 250 requirement for count and identity at time of delivery.

d. Traceability will not be required on hardware furnished for mockups and trainers.

e. Long lead time items such as ablative hatches may be constructed of boxed-in sheet metal rather than honeycomb material, and cork rather than regular ablative material if the exterior dimensions and finishes conform to flight hardware specifications.

f. Electrically powered components, including plugs and switches, will be mechanically functional only, unless the customer specifically directs such components to be electrically operational. Modifications affecting mockup or trainer utility outlets, plugs, etc., shall be electrically compatible with the originally delivered mockup and trainer configurations.

5. Mockup and Trainer Requirements

a. MSC-1, MSC-2, and CMS-1, 2, and 3 hardware shall be subject to the requirements and deviations defined above except where specifically modified by written NASA contractual direction.

b. The KSC-E Egress Trainer Mockup shall be maintained to the previously delivered level of fidelity and updated only in the areas which affect pad egress, chamber egress, and rescue operations. The exterior shall provide a physical replica of the interface to the access arm; the mockup hatch shall be maintained to the correct form, fit, tolerance, and function of the spacecraft hatch; interior configuration shall be limited to those items required for the crew,

chamber rescue team, and pad rescue team training, i.e., crew couches, restraint harnesses, electrical and oxygen umbilicals, hand controllers, handholds, selected controls, and other items required for egress procedure. (The selected controls have been previously identified and installed in the trainer.) Interior volume representations related to egress shall be represented, i.e., the Portable Life Support System (PLSS), the Operations Simulator (OPS), junction boxes, stowage boxes, protuberances, etc.

c. Hardware for Mockups 27A and 27B, including the LM-CM access tunnels, docking probes, drogues, docking latches, and hatches shall be maintained to conform specifically to flight hardware specifications for crew handling functions except where modified by written NASA contractual direction.

d. Zero G, WIF, and miscellaneous training hardware shall be subject to the same requirements as MSC-1, 2, and CMS-1, 2, and 3 unless otherwise specified by written NASA contractual direction.

6. Technical assistance for maintenance, modification, repair, and update beyond the capability of the NASA MSC Mockup Section shall be made available by NR upon receipt of contractual direction. NR will submit a firm cost proposal for this effort under provisions of Paragraph 1.1.7.2, Part II of the Contract Statement of Work.

Definitions

1. Mockup - is a facsimile of a portion of CSM hardware which involves flight crew interface.

2. Mockup Updating - is defined as that effort required by NR to provide modification kit hardware and/or data packages, to reflect changes in specified spacecraft configurations, for NASA incorporation into the mockups in their possession. (Kits necessary to update the mockup from one vehicle configuration to its next designated vehicle configuration.)

3. Mockup Maintenance - is defined as that effort required by NR to provide additional modification kit hardware and/or data packages to reflect the latest changes impacting upon previously supplied hardware prior to the final flight configuration of a specified spacecraft.

4. Data Package - is defined as a group of marked up production prints, engineering orders, layouts or sketches defining the configuration, effectivity, inspection level fabrication, assembly and installation instructions for a kit of parts or for modification of existing parts.

A data package also includes copies of the mockup orders used to authorize release of noted prints and a list of noted prints relating each to its specific collector MCR and task number.

Ground Rules

1. Each CCA issued by NASA will include effectivity for mockups and trainers, as applicable.

2. NASA and NR shall make a technical determination as to the effect on noted mockups and trainers resulting from future spacecraft changes and, at joint coordination meetings held on an as-required basis, identify the necessary hardware and/or data as required. Meetings are to be held on an alternating location basis - between NASA/MSC, Houston, and NR, Downey.

3. A collector Master Control Record (MCR) will be established for each mockup with respect to each spacecraft configuration update as depicted in the matrix under Scope - item #3. A collector MCR will be maintained for CMS-1, 2, and 3.

4. The Master MCR will accumulate mockup and trainer changes by reference to other MCR's including appropriate task descriptions. Hardware changes not associated with MCR's, but technically identified by NR as required for the specific mockups and trainers, will also be identified on the Master MCR.

5. Data packages shall be supplied to the NASA for all hardware delivered for maintenance or update of MSC-1, MSC-2, KSC-E, 27A, and 27B. For configuration changes which do not require the fabrication of parts by NR, a data package will be furnished. The data package will contain all the information required for the fabrication and installation of parts by NASA. A single data package shall be supplied for MSC-1 and MSC-2 for those changes common to both vehicles. Separate data packages shall be supplied for KSC-E. Data packages will not be supplied for CMS-1, 2, or 3, Zero G, WIF, or miscellaneous training hardware, unless specifically directed by the NASA.

6. NR shall fabricate and furnish hardware parts to MSC in accordance with the following criteria:

   a. Machined, molded, or specifically fabricated parts

   b. Formed sheet metal parts

   c. Plumbing lines, fittings, and fixtures

   d. Electrical connectors, switches, circuit breakers, lighting fixtures other than the Main Display Console (MDC)

   e. Containers and inserts for retention of stowed items

7. NR shall maintain, as required, planning and schedule status for all hardware being fabricated.

8. All hardware and/or data packages shall be accepted at NR's plant as evidenced by execution of DD Form 250.

9. The NR cost proposals in response to CCA's which approve spacecraft changes having mockup and trainer effectivity will include that effort resultant from the mockup and trainer update and maintenance requirements.

10. NR will accumulate mockup and trainer changes that are not identified to a specific CCA approving a spacecraft change. An Engineering Change Proposal (ECP) will be submitted on a monthly basis defining the design and fabrication efforts required to incorporate these changes into the affected mockups and trainers. The ECP, including a Budgetary and Planning estimate, and a request for CCA coverage will be submitted by the 15th day of each month to cover the identified changes beginning on the 1st and ending on the last day of the preceding month. Individually proposed changes of major significance will be submitted immediately, in the form of an Emergency ECP. Contractual coverage will be provided under the provisions of Paragraph 1.1.7.2, Part II of the Contract Statement of Work.

11. Where feasible, NR shall make maximum utilization of multiple release effectivity for the fabrication of mockup and trainer hardware.

12. The NASA will issue a CCA for those approved changes referenced in paragraph 10 in accordance with the Contract Change Authorization Procedure, NAS 9-150-001. Action to provide hardware and/or data packages will be initiated only after receipt of a CCA.

North American Rockwell Corporation

National Aeronautics and Space Administration

APPENDIX K

SAMPLE OF REQUIREMENTS FOR ZERO-GRAVITY SIMULATION TRAINING ARTICLE

RECP NUMBER	REQUEST FOR ENGINEERING CHANGE PROPOSAL	DATE
OJ0015		2/23/70

ORIGINATING ORGANIZATION	REQUESTED ACTION
Experiments and GFE Office	[X] CCA [ ] ECP

CONTRACT NUMBER	CONTRACTOR	CCA NEED DATE
NAS 9-10457	Fairchild Camera Equipment Company	ASAP

END ITEM NOMENCLATURE

O-G Simulation Training Mockup Hardware

CHANGE TITLE

Provide EVA Simulation Mockup of 3" Mapping Camera/Laser Altimeter and Two Camera Cassettes

DESCRIPTION OF CHANGE

Provide for use in O-G simulation tests one 3" mapping camera/laser altimeter mockup compatible with O-G aircraft and underwater testing facility requirements (attached). Provide one mass representative and one neutrally bouyant record container (cassette) which meet the attached requirements. The interface requirements of the overall camera/altimeter mockup with MSC Mockup No. 8 shall be coordinated, as required, with MSC. Required delivery date of mockup to NASA-MSC is April 1, 1970.

SPECIFICATION CHANGE

SPECIFICATION NUMBER	PAGE NUMBER	PARAGRAPH

CHANGE FROM/TO

JUSTIFICATION

Mockups requested are required to verify capability of EVA crewman to retrieve record container and verify the acceptability of S/C EVA provisions to allow such retrieval. Mockups will subsequently be utilized for flight crew training of the EVA procedures.

EFFECTIVITY

Apollo 16 and 17 support.

RECP NUMBER	REQUEST FOR ENGINEERING CHANGE PROPOSAL	DATE
OJ0015		400

EFFECT OF CHANGE ON

SAFETY Proper EVA/O-G simulation training lowers probability of excessive metabolic workload	TRAINERS AND TRAINING To be incorporated into MSC Mockup No. 8
RELIABILITY N/A	GSE N/A
PERFORMANCE Improved flight performance due to early identification of potential design deficiencies in GFE or S/C design	SPARES N/A
MAINTENANCE N/A	INTERFACE CONTROL DOCUMENTS
OPERATIONS Simplified due to early design verification & accurate training	DELIVERY SCHEDULE April 1, 1970
WEIGHT, BALANCE, AND STABILITY N/A	CTN/CTR Part of EVA provisions verification
GFE/GFP N/A	OTHER RECP'S/ECP'S

REQUIRES INSTALLATION AT KSC

☐ YES ☐ NO

IMPACT ON PROGRAM IF THIS CHANGE IS DISAPPROVED

Inadequate provisions available for EVA simulated verification of cassette retrieval provisions and S/C provisions which accommodate this retrieval.

REMARKS

ESTIMATED COST	FY 70	FY 67	FY 68	FY 69	TOTAL

APPROVALS

SIGNATURE OF ORIGINATOR	DATE	SIGNATURE OF DIRECTOR OR LM/CSM MANAGER	DATE
PG/Jerry R. Goodman	2/24/70		
SIGNATURE OF DIVISION CHIEF	DATE	☐ APPROVED	☐ DISAPPROVED
	2/24/70		

A Mapping Camera Mockup is required in support of engineering evaluations, procedures development, and flight crew training exercises to be performed in the KC-135 zero-g aircraft and the Water Immersion Facility (WIF). The mockup shall reflect the flight article Mapping Camera in all areas affecting flight crew interface or performance. The mockup should be operable only to the extent specified herein. The mockup shall have two film cassettes -- one of which shall be mass representative for KC-135 zero-g simulations, and the other shall be neutrally buoyant for use in the WIF. The mockup shall interface with the MSC-8 zero-g SIM mockup in both the retracted and deployed positions.

Those portions of the camera must be operable to the following extent:

The film cutter/removal handle must have the same dimensions, tolerance, form, fit, function, travel, and actuation forces as the flight article.

The film cassette handles must have the same dimensions, tolerance, form, fit, function, travel, and actuating forces as the flight article. The zero-g mockup film cassette must be of actual flight weight and center of gravity. The WIF mockup film cassette must be neutrally buoyant with the center of buoyancy coincident with the center of gravity. Large frontal areas shall be perforated to facilitate movement through the water and to allow drainage.

A deployment mechanism per se is not required; however, capability must be incorporated for locating the mockup in the two extreme positions (i.e., it may be hand deployed).

The non-crew-operated portions of the mockup shall reflect the flight article with regard to geometric form, fit, and function in all areas affecting flight crew performance. These items shall be volumes only and nonfunctional.

Materials used in the camera mockup and neutrally buoyant cassette shall be capable of withstanding prolonged submersion in fresh water with minimum corrosion. (Wood or styrofoam components may not be used.) Finishes and protective coatings shall provide adequate protection for underwater usage. Painting shall be in accordance with MSC Specification SLB 43101016. (Bearing surfaces in the film cassette release mechanism shall not be painted.)

The Mapping Camera Mockup must be capable of withstanding acceleration force requirements imposed by operation in the KC-135 zero-g aircraft. These g-loads are:

Forward	-	16-g*
Aft	-	2-g
Lateral	-	2-g
Down	-	5-g
Up	-	2-g

* The 16-g forward load is a crashlanding load requiring that the camera body remain in tact and not break out of the mounting provisions. It is not required that this load be sustained with the mockup film cassette mounted in the camera. The cassette will be restrained by cargo straps to the floor of the aircraft for takeoff and landing. The 16-g load also assumes that the camera is in the retracted position.

The orientation of the SIM bay in the aircraft will be with Xs 383.0 (CM end) forward and the SIM bay side of the SM up.

403

1. THIS SPECIFICATION APPLIES TO STAINLESS AND ALUMINUM ALLOYS USED IN WATER IMMERSION FACILITIES.
2. ALL SURFACES TO BE FINISHED SHALL BE PREPARED PER SSPC-6 USING NO. 4 SAND ONLY.
3. FIRST COAT TO BE NO. 21 FERRA LOX WASH PRIMER (GREEN) .06 DRY MILS THICK.
4. SECOND COAT TO BE NO. 41 FERRA LOX EPOXY PRIMER (RED) 3.0 DRY MILS THICK.
5. THIRD COAT TO BE NO. 60-1 FERRA LOX UREATHANE (WHITE) 4.0 DRY MILS THICK.
6. TOTAL THICKNESS OF FINISH TO BE 7.06 DRY MILS.
7. SUGGESTED SOURCE FOR FURTHER INFORMATION AND MATERIALS:

HENRY AND CARLSON, INC
6656 NAVIGATION
HOUSTON, TEXAS 77040
713 WA6-2274

NEXT ASSY : SGB 43100850

SIGNATURES	DATE
[illegible]	8-8-68
[illegible]	8-5-68
[illegible]	8-5-68
[illegible]	8-8-68
[illegible]	8-8-68

NATIONAL AERONAUTICS AND SPACE ADMINISTRATION
MANNED SPACECRAFT CENTER HOUSTON, TEXAS

PAINTING INSTRUCTIONS, UNDERWATER FACILITIES

CODE IDENT. NO.	SIZE	DWG NO.
21356	A	SLB 43101C03

SCALE NA	FCSD	SHEET 1 OF 1

APPENDIX L

PORTION OF CREW STATION REVIEW MINUTES

NATIONAL AERONAUTICS AND SPACE ADMINISTRATION
MANNED SPACECRAFT CENTER
HOUSTON, TEXAS 77058

IN REPLY REFER TO: PD8/L814-68-JC22-1385
Contract NAS 9-150

DEC 30 1968

Mr. Milton I. Drucker
Director, Apollo CSM Program Contracts
Space Division
North American Rockwell Corporation
Downey, California 90241

Dear Mr. Drucker:

Enclosed for your information and implementation are the minutes of the Crew Compartment Review Meeting held at NR on December 17 and 18, 1968.

The Contractor is requested to implement the following additional specific actions relative to the attached minutes:

1. ORF (Optical Range Finder) Integration. (Part II of the minutes)

a. For ORF alignment, NR shall utilize the criterion of $\pm 2^{\circ}$ as recommended in the minutes.

b. NR will provide procedures to NR Launch Operations to accomplish ORF by "Bubble" or other leveling type provisions, eliminating the need for the use of special GSE provisions. If this alignment proves to be impractical, NR shall provide such rationale and define the required alignment techniques and GSE provisions to NASA by January 2, 1968, prior to their implementation.

c. NR will expedite delivery dates of the ORF mounting bracket and alignment procedures to KSC. The bracket and alignment procedures are required by no later than January 31, 1969.

d. NR will provide GFE dovetails and related attachment screws to Kollman as soon as possible to preclude any delivery schedule slippage of the ORF to KSC.

e. Subsequent to the December 17, 1968, mating on the ORF, NR, W. Anderson, requested that definition of the location of dovetail on the ORF via establishment of dimension "X" be deferred until December 27, 1968, instead of the December 19, 1968, date agreed to at the meeting. NR will insure that such definition is made by no later than December 27, 1968.

2. General Crew Compartment Review Meeting. (Part II of the minutes)

a. NR is requested to confirm the availability of open mockup demonstration items from the October 23-25, 1968, Crew Station Review. Specifically, review of the following Review Item Dispositions (RID's) is requested:

D107-028-STW-001, STW-002, STW-007, STW-008, STW-009, and STW-010.

In addition, demonstration of the Optical Range Finder installation as per CCA direction is requested. A schedule for the review with NASA of the items listed as enclosure 7 of the minutes is also requested by January 2, 1968.

b. NR is requested to expedite the incorporation of the SO-65 prototype into the mockup, as well as the couch turnbuckle lowering provisions.

With regard to the timely resolution and closure of open items from previous crew compartment meetings, NR is delinquent in providing the biweekly submittal of status and documentation for previous Crew Compartment meetings. NR is requested to take immediate steps to provide follow-up documentation and status on all prior crew compartment meetings and as defined in the enclosed minutes. Prompt submittal of design implementation data will allow early NASA review and acceptance of NR's design approach. It should also be noted that the timely availability of required mockup modifications for review and submittal of design implementation data will improve the effectiveness of the Crew Compartment Reviews and not require a crew compartment stowage review for each spacecraft.

Sincerely yours,

JACK FULLER

Jack Fuller
Contracting Officer
Spacecraft Contract Branch

Enclosure
cc: NR-Houston NR-KSC/B. Hello

MINUTES

OF

CREW COMPARTMENT REVIEW MEETING

DECEMBER 17 & 18, 1968

HELD AT

NORTH AMERICAN ROCKWELL CORPORATION

DOWNEY, CALIFORNIA

PART I OPTICAL RANGE FINDER INTEGRATION, CSM 104

PART II GENERAL CREW COMPARTMENT REVIEW ITEMS

APPROVAL

PART I

Adolph Bialecki
NR

Jerry R Goodman
NASA-ASPO

12-20-68
NASA-GEN OFFICE

J. Humphreys for S. Mellman per telecon
KOLLSMAN INSTRUMENT CORP. 12-20-68

PART II

Jerry R Goodman
NASA-ASPO

E.K. McMullin
NR

Enclosure 1
Page 1 of 1

OPTICAL RANGE FINDER MEETING - PART I

NR DOWNEY

17 DECEMBER 1968

NAME	ORGANIZATION	RESPONSIBILITY	PHONE NO.
Arnold Fishler	Kollsman	Project Engrg.	516-WA1430 X336
Walter Chin	Kollsman	Sys. Engineer	516-WA1430 X336
W. R. Anderson	NR	Mtg. Reqmts.	X 3251
J. H. Brown	NASA-G&C Div.	Div. Rep. @ Downey	X
M. D. Holley	NASA-G&C	G&N Div.	HU3-3991
T. W. Humphreys	NASA/MSC/R&QA	MSC/R&QA	HU3-3991
C. M. Willis	NR	Telecommunications	X3153
J. W. Montgomery	NR	Project Office	X3584
R. W. Nygren	NASA/FCSD	FCDR	HU3-2703
W. Musser	Kollsman	Field Engr.	X1262
C. D. Perner	NASA-FCSD	Crew Station	X4171
J. R. Goodman	NASA-MSC	Prog. Office	HU3-2954
E. K. McMullin	NR-Proj. Office	Project Engr.	1517
M. H. Zelon	NR-Proj. Office	Project Engr.	1517
D. J. Becker	AC Electronics	Subcontract Mgmt.	2937
R. A. Montgomery	AC Electronics	Field Engr.	1838
E. Rangel	General Electric	Program Office	HU3-3586
D. Sedlak	General Electric	Program Office	483-2594
S. B. Nahin	NR	Telecommunications Stowage	X3153
A. Bialecki	NR-Proj. Office		X3061

CREW COMPARTMENT REVIEW MEETING

DECEMBER 17-18, 1968

NR-DOWNEY, CALIFORNIA

PART I

1.0 Optical Range Finder Meeting

A Crew Compartment Meeting was held at NR on December 17, 1968, in the Mockup Display Area with the personnel listed on the Sign-in Sheet (Enclosure 1) participating. The purpose of the meeting was to evaluate and resolve the Kollsman Optical Range Finder (ORF)* installation and stowage on CSM 104.

1.1 In order to establish a workable arrangement, the following outline was presented and discussed in detail.

1.1.1 Optical Range Finder (ORF) Interfaces and Mounting:

a) Basic Use Requirements

b) Configuration

c) Drawings/Mockups

d) Stowage

e) Alignment/Line-of-Sight Requirements

f) Readout Provisions

g) Mounting Requirements

h) Mounting Interface Provisions

1.2 As a result, the following received general approval:

*The title "Diastimeter" does not correctly identify the function of this equipment. NASA stowage lists should reflect the nomenclature of the "Optical Range Finder," not "Diastimeter."

1.2.1 Basic Use Requirements

a) Essentially required for ranging verification during CM/LM docking between four (4) miles and 1000 feet. (Below 1000 feet COAS is used).

b) Check out rendezvous equation for CMP.

c) Used as a backup to provide ranging during LM rescue (CSM Active Docking).

d) Single crewman on CM must carry out entire operation.

e) ORF and COAS will not be used at the same time.

f) ORF may be used twice during normal lunar mission.

g) ORF will not be rotated on its SC mount. The SC will be oriented to line up the two lenses with the LM running lights.

1.2.2 Configuration

a) Changes to the ORF configuration as a result of this meeting are defined by Kollsman Instrument Company Drawing Number 101237200330A, Sheets 1 and 2, dated December 3, 1968, and are recorded in Enclosure 2).

The configuration as noted constitutes NASA/Kollsman/NR sanctioned configuration definition.

1.2.3 Stowage

a) ORF will be stowed in the right-hand side of Compartment A6 (see photographs, Enclosure 3).

b) Addition of stowage cushions will change A6 configuration, resulting in P/N reidentification.

c) The stowage of the CFE mounting bracket for the ORF shall be in Compartment A-8. NR will notify NASA, J. Goodman, of any problems with use of A-8.

1.2.4 Alignment/Line of Sight Requirements

a) Each of the two lenses of ORF has a field of view of seven degrees.

b) A lighted reticle for nighttime bore sighting with this instrument is not a mandatory but rather a highly desirable requirement.

c) The CM x-axis alignment of the COAS mount may be utilized for referencing of the ORF alignment. Preferably, the alignment of the ORF via "Bubble Level" techniques will be utilized, if feasible, to preclude extensive GSE design/use and attendant S/C serial time installation. SEE ACTION ITEM, PART I, NO. 1.

d) NASA requested that NR use the same approximate alignment accuracies as those developed for the 70 mm camera in S/C 103 - if such alignment is feasible without vehicle impact. NR took exception to this request, indicating that it is too early to define the accuracies which can be "reasonably" obtained.

e) It does not appear feasible to align ORF with accuracy required for COAS operation ($\pm\frac{1}{2}^{\circ}$). The ORF should be mounted to clear any structural obstructions in the window area, with the final alignment accuracy defined after the S/C mounting provisions and GSE alignment techniques are resolved.

Final alignment accuracy will depend a great deal on the type and difficulty of the GSE techniques and does not now appear to be constrained by the mounting approaches defined.

1.2.5 Readout Provisions

a) Right-angle mirror will be used on the ORF to provide adequate display orientation (Enclosure 2); this has negligible effect on NR stowage.

b) Numerals will be provided 1.9 times larger than those now on mockup in possession of M. Holley, NASA-EG44. The numerals will be reverse scribed on the drum for direct viewing when utilizing mirror.

1.2.6 Mounting Requirements

a) It was determined that the existing type TV camera dovetail interface provisions of the ORF/mounting bracket interface shall be utilized. These provisions are already defined and tested, and they would allow use of current TV mounting type of bracket.

b) The dovetail for mounting to the ORF will be built and provided by NR to Kollsman, who in turn will drill and tap holes into the ORF for attachment of the NR dovetail by Kollsman. NR will also provide to Kollsman the screws for the attachment of the NR dovetail. Limitation of screw excursion into the ORF is defined in the drawing, Enclosure 2.

c) Attachment bonding of a dovetail to the side of the ORF was considered impractical. Mechanical attachment was determined the most feasible approach.

d) Kollsman advised NR that three (3) or four (4) holes can be tapped in the ORF case during assembly. Holes shall be drilled and tapped by Kollsman as defined on the "sanctioned" Kollsman drawing Enclosure 2.

e) Four (4) design concepts of the CFE bracketry were discussed in a trade-off approach (Enclosure 4).

2.0 Astronaut Office Inputs to Design Requirements

C. Perner/CF131 NASA provided the comments from Astronaut D. Scott concerning the ORF installation. It was stressed that a mounting bracket was a prime requirement. A rigidized mounting not requiring crew adjustment was preferred, with an order of accuracy of $\pm 2^{\circ}$.

3.0 Summary

3.1 Kollsman advised that the optics of the ORF are aligned to within 15 minutes ($\frac{1}{4}^{\circ}$) with any surface of the main case of the ORF. (The appurtenances are not so constrained.)

3.2 NASA strongly advised the use of a bubble level alignment approach utilizing the ORF main case surface (optic reference) which will permit sufficient accuracy for a $\pm 2^{\circ}$ requirement. Correction for S/C attitude on launch pad may be determined by leveling by means now available.

3.3 A reference for design approach No. 3 or No. 2 was stated (Enclosure 4) for the CFE mounting bracket. However, as a result of further mockup work in Mockup 28, the consensus was to proceed with design approach No. 2 (Enclosure 4). Stowage of the current type of mounting bracket as per approach No. 2 in container A8 was found feasible.

NR advised that utilization of the rigidized TV support bracket could feasibly be used to locate a new mount in the spacecraft. A review of the spacecraft by NR revealed that locating the new TV type "socket" presented no apparent problems at this time.

3.4 Schedule for the ORF installation was provided as follows:

3.4.1 Kollsman Instrument Company (K.I.C.)

a) Training unit at KSC - January 2, 1969

b) Flight Test Unit #1 at KSC - January 31, 1969

c) Flight Test Unit #2 at KSC - February 10, 1969

d) Qual Test Completion Schedule - February 11, 1969

3.4.2 North American Rockwell

a) Number of dovetails required - 4.

b) Date dovetails and hardware required at Kollsman Instrument Company (KIC) to preclude schedule impact:

1 set - January 2, 1969
1 set - January 14, 1969
1 set - January 21, 1969
1 set - January 30, 1969

NR to send dovetails and hardware to KIC for installation on the ORF.

c) NR to supply drawing of dovetail to KIC by January 3, 1969.

KIC shipping address:

Kollsman Instrument Company
575 Underhill Blvd.
Syossett, New York 11791

Attention: Arnold L. Fishler

d) NR bracket and related attachment screw requirements:

Total of two (2) sets of brackets plus related parts.

1) Flight bracketry and spacecraft mods (if any) at KSC no later than January 31, 1969. NR estimates January 18, 1969.

e) Spacecraft cushions to KSC no later than January 31, 1969.

f) AMS modification kit bracketry and related provisions including stowage provisions by January 31, 1969.

NOTE 1: No special backup flight mounting bracket will be provided. It was determined that the AMS prototype could satisfy such requirements if they existed.

NOTE 2: NR dates subject to NR Change Schedule Board Review.

3.5 Nomenclature of the diastimeter will be changed to "Optical Range Finder." NR and NASA to reflect the change in the Apollo Stowage Lists.

3.6 NR will add the dovetail to their ORF mockup.

3.7 M. Holey/NASA/EG44 advised the Optical Range Finder spares (i.e., batteries, etc) will be supplied by the G&N Project Office.

3.8 Contractual coverage to NR is by CCA 3001 dated December 6, 1968, which provides only for stowage in CSM 104 in container A6. Revised CCA is required to cover: necessary CFE hardware for alignment and support/attachment of the GFE ORF for use through the CSM LH Rendezvous Window; stowage of the CFE bracketry; fabrication of prototype/AMS/MSC mockup bracketry. It is understood that CCBD 8C1968 was signed by Mr. K. Kleinknecht, NASA, on December 13, 1968. The CCBD has been approved and will reflect the necessary changes when incorporated into revised CCA. (CCB of December 13, 1968, has discussed and approved the foregoing changes.)

3.9 NR will provide to NASA and KIC by December 19, 1968, the definition of the dimension "X" to locate the dovetail on the side of the ORF as noted on the referenced drawing provided in Enclosure 2.

4.0 <u>Transmittal of Equipment/Drawings</u>

To NR from NASA/Kollsman: One (1) mockup of optical range finder.

To NR from Kollsman: KIC Drawing No. 10123720-0330A Sheets 1 and 2 dated December 3, 1968.

(Enclosure 2 of these minutes)

To Kollsman and NASA from NR: Series of Polaroid photographs of ORF mockup; of ORF in A6 container; of ORF mounted in M/U 28.

Part II

GENERAL CREW COMPARTMENT REVIEW MEETING

2.0 After basic completion of the Optical Range Finder portion of this meeting, Part II, the Crew Compartment meeting was continued at NR on December 18, 1968, in the mockup display area, with attendees as per Enclosure 5.

2.1 The meeting commenced with a review of the action items assigned at the Crew Station Review Meeting and Mockup Review held at NR on October 23-25, 1968. The status of those open items is as follows:

Action Item 1	ICD approved by NASA on November 15, 1968. Drawings were transmitted to NR (K. Shaw). Closed.
Action Item 2	ICD approved by NASA. Drawings were transmitted to NR (K. Shaw). Closed.
Action Item 3	Drawings were transmitted to NR (K. Shaw). Closed.
Action Item 4	No change required. Closed.
Action Item 6	No requirement. Closed.
Action Item 7	CCBD 8E374 changed method of attaching Bio-Belt from stitching to heat seal. Dated September 29, 1968. Closed.
Action Item 8	Open
Action Item 9	1. S/C 103 - TV requirement. 2. S/C 104 - No TV requirement. TV mounting bracket modified for sequence camera. 3. S/C 106 and sub - TV requirement. Ref. CCBD 8C1894, approved December 26, 1968. Closed.
Action Item 10	CCB approved November 8, 1968 (Item 3i) Closed.

Action Item 12	Use of Velcro authorized. ICD approved. Closed.
Action Item 13	Reference CCA 2636, MCR 7887. Closed.
Action Item 14	New J Box is at KSC installed in S/C. Closed.
Action Item 15	Crewmen will wear life vests during launch/reentry. No stowage requirement for vests during launch/reentry. Closed.
Action Item 16	NASA (E. Rangel) will submit an RECP. Closed.
Action Item 17	Stowage resolved by joint NASA/NR CCB on November 27, 1968. Closed.
Action Item 18	G&N Dust Covers have identification markings. Closed.
Action Item 19	Acceptable by NASA with markings. Closed.
Action Item 20	No NASA requirement. Closed.
Action Item 21	Open
Action Item 22	No reported problems. Closed.
Action Item 23	Food containers are interchangeable. Ref. CCBD 8C1845 on December 3, 1968. Closed.
Action Item 24	Close via normal KSC procedures.
Action Item 25	1. Changed out for 103 and subs. 2. Pending NASA direction to change out in S/C 104 and subs. 3. Pending NASA direction to change out in S/C 104 and subs. 4. Floor pad modification eliminates problem on S/C 104. 5. Ref. MCR 6791. Change in line.

Normal ECP follow-up procedures will close out action. Closed.

Action Item 26 Open

Action Item 27	No requirement. CFE bracket to be flown. Closed.
Action Item 28	Open

2.2 S/C 104 follow-up items as listed in the matrix (Enclosure 2) were reviewed. The status of those items is as follows:

EVA Thermal Samples - Ref. MCR 11134, item 5. NASA briefly reviewed in mockup. Since MSC/NR will have completed evaluation of both the prototype and flight hardware provisions at KSC by December 19, 1968, NASA comments on the acceptability will await NASA/NR inputs from KSC.

STW 001	S/C 104 and subs. Ref. MCR 7940 and 7435, NR engineering due December 20, 1968. Release as mod kit to KSC. Installation schedule in mockup by January 13, 1969. NR to confirm date available for NASA review.
STW 002	Ref. MCR 7435. NR engineering due December 20. Installation scheduled in mockup by January 16, 1969. NR to confirm date available for NASA review.
STW 003	NR to add "caution" note to Apollo Operations Handbook (AOH). No NASA follow-up CCB action proposed. Closed.
STW 004	Back-up overboard WMS. NR proposed change to November 27 Joint CCB was approved for S/C 107 and subs. NR advised they were updating mockup. Closed.
STW 005	Reference EO 683078 and 683079. NR Engineering Release December 13, 1968. S/C 106 and subs. Closed.
STW 006	Mockup discrepancy only S/C is OK. NR corrected and NASA review in mock-up completed. Closed.

007	Reference MCR 7435 and 7940, NR Engineering due December 20, 1968. Installation scheduled in mockup by January 13, 1969. NR to confirm date available for NASA review.
STW 008	Same as STW 007 above.
STW 009	Same as STW 007 above.
STW 010	Reference MCR 7707, EO 720643 dated November 22, 1968. Installation scheduled in mockup by January 10, 1969. NR to confirm date available for NASA review.
STW 011	Reference MCR 7301, EO 698690 and 698691, dated October 31, 1968. NASA review in mockup completed. Closed.
STW 012	Same as STW 011 above.
STW 013	NR proposed no action required. Clips do function O.K. NASA concurs. Closed.
STW 014	CCBD 8C1787 approved November 8, 1968. Reference MCR 7817, EO 711855 dated November 21, 1968. Not to be installed in mockup (S/C 104 only). NR's approach acceptable based upon NASA's review of EO's (paperwork) in mockup. ICD signed on routing. Closed.
STW 015	1. Too expensive to install in mockup. NASA concurs. 2. 107 and subs. Change in work. Closed. 3. NR using engineering prototype. NASA will exchange for flight configuration. 4. Review in mockup. 5. Following S/C 103 flight. NR will supply date to NASA for review couch grounding and rotating arm zest. 6. Closed. 7. Engineering release of new item due January 10, 1969. Closed. 8. Ref. MCR 11131. Closed. No mockup required. <u>Action Item 1</u> - NASA (E. Rangel, J. Thompson) will provide filter for use in NR mockup 028.

STW 016 Reference MCR 7957. NASA review in mockup completed. Closed.

Action Item 2 - NASA (C. Perner to supply DWGS. of timer to NR. NASA to review EO's and DWGS. for S/C 106, 107, Volume A5 and R13.

2.3 PLSS LiOH Canister Stowage for S/C 104

Stowage of LiOH cartridge in Volume A1 is considered feasible and acceptable by NASA for S/C 104. Requires off-loading of three tissue dispensers from Vol. A1 prior to canister stowage. (Reference Enclosuve #6). Stowage Lists should be updated to show this location. Closed.

Action Item 3 - NASA (R. Nygren) to work out in-flight stowage procedures in accordance with schedule requirements.

2.4 Review of operation of camera power cable with flange connectors (flight test to Panels 15, 16 and 100).

The operation of connecting the COAS flanged type electrical connector to Panels 15, 16 and 100 proved to be "easy" and acceptable as compared to use of the other two types of flight connectors evaluated. (The other type of connectors were "very difficult" to connect.) NASA will take the necessary action to implement change board approval of the "flange type" connector for S/C 104 and subs.

Action Item 4 - NASA (C. Perner) to define requirements for connectors, P/N ME 414-0465-001, 7 pin normal clocking, for S/C 106 and subs. Total number required, need dates, and location will be supplied to J. Goodman/E. Rangel.

Action Item 5 - NASA (E. Rangel) will follow through on CCBD for NR to provide connector requirements for S/C 106 and subs.

2.5 CSM 104 Remote Cable Routing in Clips

NASA reviewed NR routing proposal as defined by ICD MH01-03275 -136, Revision A, Dated October 21, 1968, and already released EO's and found acceptable. ICD approved. Closed.

2.6 New items

2.6.1 Flight Data Cards for S/C 104, 106 and subs.

NASA reviewed NR proposed stowage in adding flight data cards to S/C 104, 106 and subs. As defined by ICD MH01-03290-136 (NC). ICD approved by NASA. Closed.

2.6.2 LM Return Film Stowage

Review indicated that there was no defined stowage for LM return film stowage, S/C 104 only. Provisions were to be accomplished by proposal for "stow film in one container for reentry, S/C 104." Discussed at November 27, 1968 CCB.

To accomplish stowage proposal on a "No impact" basis, the following stowage was reviewed and approved by NASA:

> After removal of unsuited reentry provisions from ½ of A5 container, two 16 mm and two 70 mm film magazines, a DSEA tape recorder and two tissue dispensers (if available at that time) will be stowed in the A5 container prior to reentry. S/C 104 only. (See photo - enclosure 6).

Action Item 6 - NASA (R. Nygren) to work out in-flight stowage of film packages. LM return film stowage for S/C 106 and subs, will be in container R-13 as per currently provided provisions as approved by NASA/NR CCB.

2.7 New Items - Future Crew Compartment Meeting (See Enclosure 7).

2.7.1 Lunar Mission Photo.

2.7.2 Couch Grounding and Rotating Arm Guard

Following S/C 103 Flight, NR to supply date for NASA review. Reference RID STW 015.

2.7.3 LM Camera Bags

NR Engineering Release due January 10, 1969. S/C 107 and subs.

2.7.4 SO 65 Stowage Box and Couch Lowering (Turnbuckle)

Flight hardware fit check approved by NASA (A. Granville). Installation scheduled in mockup by January 17, 1969. NR to confirm date available for NASA review. NASA requested NR to expedite the availability to the previously defined date of January 10, 1969.

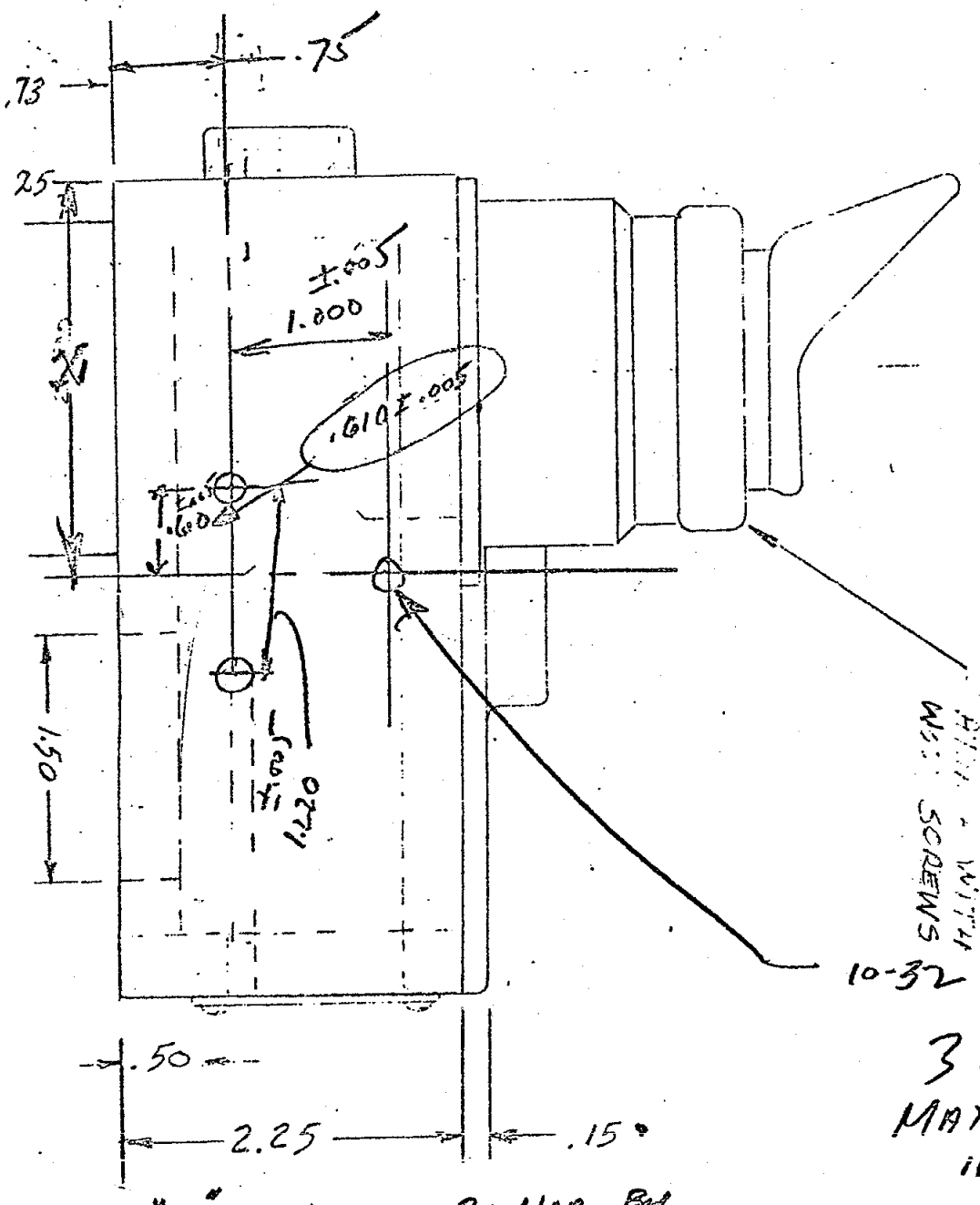

3 PLACES WITH
MAX DEPTH .230 +0 −.032
INTO PLATE

"X" TO DEFINED BY NAR BY
DEC. 1968.

THE ABOVE CHANGE AND SHEET No. 2 INTO THE DIASTIMETER
CONFIGURATION REVIEWED, & APPROVED
& SANCTIONED BY :

MOD'S TO
KOLLSMAN INSTRUMENT
CORP. DWG. No.
10123720 0330A
SHEETS 1 AND 2
DATED 12/3/68

12-17-68

12-17-68 (ICD)

REPORT DOCUMENTATION PAGE

Form Approved
OMB No. 0704-0188

Public reporting burden for this collection of information is estimated to average 1 hour per response, including the time for reviewing instructions, searching existing data sources, gathering and maintaining the data needed, and completing and reviewing the collection of information. Send comments regarding this burden estimate or any other aspect of this collection of information, including suggestions for reducing this burden, to Washington Headquarters Services, Directorate for Information Operations and Reports, 1215 Jefferson Davis Highway, Suite 1204, Arlington, VA 22202-4302, and to the Office of Management and Budget, Paperwork Reduction Project (0704-0188), Washington, DC 20503.

1. AGENCY USE ONLY *(Leave Blank)*	2. REPORT DATE	3. REPORT TYPE AND DATES COVERED
	October 2006	NASA Technical Paper

4. TITLE AND SUBTITLE
Crew Station Aspects of Manned Spacecraft Vol. 1 and 2

5. FUNDING NUMBERS

6. AUTHOR(S)
Jerry Goodman

7. PERFORMING ORGANIZATION NAME(S) AND ADDRESS(ES)
Lyndon B. Johnson Space Center
Houston, Texas 77058

8. PERFORMING ORGANIZATION REPORT NUMBERS
S-982

9. SPONSORING/MONITORING AGENCY NAME(S) AND ADDRESS(ES)
National Aeronautics and Space Administration
Washington, DC 20546-0001

10. SPONSORING/MONITORING AGENCY REPORT NUMBER
TM-2006-213725

11. SUPPLEMENTARY NOTES

12a. DISTRIBUTION/AVAILABILITY STATEMENT
Available from the NASA Center for AeroSpace Information (CASI)
7121 Standard
Hanover, MD 21076-1320 Category: 15

12b. DISTRIBUTION CODE

13. ABSTRACT *(Maximum 200 words)*
This thesis presents a frame work for a crew station handbook and includes samples of the broader areas which such a handbook should cover. The completed sections of this thesis serve as extensive treatments of the topics covered. The content of the individual sections of Chapters I and II varied with my experience and knowledge.

Chapter 1=Vol 1-198 pgs
Chapter 2=Vol 2-262 pgs

14. SUBJECT TERMS
Manned Spacecraft, Apollo Spacecraft, Vostok spacecraft, Voskhod manned spacecraft, crew workstations

15. NUMBER OF PAGES
246

16. PRICE CODE

17. SECURITY CLASSIFICATION OF REPORT	18. SECURITY CLASSIFICATION OF THIS PAGE	19. SECURITY CLASSIFICATION OF ABSTRACT	20. LIMITATION OF ABSTRACT
Unclassified	Unclassified	Unclassified	Unlimited

REPORT DOCUMENTATION PAGE

Form Approved
OMB No. 0704-0188

Public reporting burden for this collection of information is estimated to average 1 hour per response, including the time for reviewing instructions, searching existing data sources, gathering and maintaining the data needed, and completing and reviewing the collection of information. Send comments regarding this burden estimate or any other aspect of this collection of information, including suggestions for reducing this burden, to Washington Headquarters Services, Directorate for Information Operations and Reports, 1215 Jefferson Davis Highway, Suite 1204, Arlington, VA 22202-4302, and to the Office of Management and Budget, Paperwork Reduction Project (0704-0188), Washington, DC 20503.

1. AGENCY USE ONLY *(Leave Blank)*	2. REPORT DATE	3. REPORT TYPE AND DATES COVERED
	October 2006	NASA Technical Paper

4. TITLE AND SUBTITLE
Crew Station Aspects of Manned Spacecraft

5. FUNDING NUMBERS

6. AUTHOR(S)
Jerry Goodman

7. PERFORMING ORGANIZATION NAME(S) AND ADDRESS(ES)
Lyndon B. Johnson Space Center
Houston, Texas 77058

8. PERFORMING ORGANIZATION REPORT NUMBERS
S-982

9. SPONSORING/MONITORING AGENCY NAME(S) AND ADDRESS(ES)
National Aeronautics and Space Administration
Washington, DC 20546-0001

10. SPONSORING/MONITORING AGENCY REPORT NUMBER
TP-2006-213725

11. SUPPLEMENTARY NOTES

12a. DISTRIBUTION/AVAILABILITY STATEMENT
Available from the NASA Center for AeroSpace Information (CASI)
7121 Standard
Hanover, MD 21076-1320 Category: 15

12b. DISTRIBUTION CODE

13. ABSTRACT *(Maximum 200 words)*
This thesis presents a frame work for a crew station handbook and includes samples of the broader areas which such a handbook should cover. The completed sections of this thesis serve as extensive treatments of the topics covered. The content of the individual sections of Chapters I and II varied with my experience and knowledge.

Chapter 1=Vol 1-198 pgs
Chapter 2=Vol 2-262 pgs

14. SUBJECT TERMS	15. NUMBER OF PAGES	16. PRICE CODE
Manned Spacecraft, Apollo Spacecraft, Vostok spacecraft, Voskhod manned spacecraft, crew workstations	434	

17. SECURITY CLASSIFICATION OF REPORT	18. SECURITY CLASSIFICATION OF THIS PAGE	19. SECURITY CLASSIFICATION OF ABSTRACT	20. LIMITATION OF ABSTRACT
Unclassified	Unclassified	Unclassified	Unlimited