NASA/TM-2016-218605

Human Health Countermeasures – Partial-Gravity Analogs Workshop

February 17, 2015

Yael Barr, M.D., M.P.H.
Gilles Clément, Ph.D.
Peter Norsk, M.D., Dr.Med.

National Aeronautics and
Space Administration

Johnson Space Center
Houston, Texas 77058

July 2016

NASA STI Program ... in Profile

Since its founding, NASA has been dedicated to the advancement of aeronautics and space science. The NASA scientific and technical information (STI) program plays a key part in helping NASA maintain this important role.

The NASA STI program operates under the auspices of the Agency Chief Information Officer. It collects, organizes, provides for archiving, and disseminates NASA's STI. The NASA STI program provides access to the NASA Aeronautics and Space Database and its public interface, the NASA Technical Report Server, thus providing one of the largest collections of aeronautical and space science STI in the world. Results are published in both non-NASA channels and by NASA in the NASA STI Report Series, which includes the following report types:

- TECHNICAL PUBLICATION. Reports of completed research or a major significant phase of research that present the results of NASA Programs and include extensive data or theoretical analysis. Includes compilations of significant scientific and technical data and information deemed to be of continuing reference value. NASA counterpart of peer-reviewed formal professional papers but has less stringent limitations on manuscript length and extent of graphic presentations.

- TECHNICAL MEMORANDUM. Scientific and technical findings that are preliminary or of specialized interest, e.g., quick release reports, working papers, and bibliographies that contain minimal annotation. Does not contain extensive analysis.

- CONTRACTOR REPORT. Scientific and technical findings by NASA-sponsored contractors and grantees.

- CONFERENCE PUBLICATION. Collected papers from scientific and technical conferences, symposia, seminars, or other meetings sponsored or co-sponsored by NASA.

- SPECIAL PUBLICATION. Scientific, technical, or historical information from NASA programs, projects, and missions, often concerned with subjects having substantial public interest.

- TECHNICAL TRANSLATION. English-language translations of foreign scientific and technical material pertinent to NASA's mission.

Specialized services also include creating custom thesauri, building customized databases, and organizing and publishing research results.

For more information about the NASA STI program, see the following:

- Access the NASA STI program home page at *http://www.sti.nasa.gov*

- E-mail your question via the Internet to help@sti.nasa.gov

- Fax your question to the NASA STI Help Desk at 443-757-5803

- Phone the NASA STI Help Desk at 443-757-5802

- Write to:
  NASA Center for AeroSpace Information
  7115 Standard Drive
  Hanover, MD 21076-1320

NASA/TM-2016-218605

Human Health Countermeasures – Partial-Gravity Analogs Workshop

February 17, 2015

Yael Barr, M.D., M.P.H.
Gilles Clément, Ph.D.
Peter Norsk, M.D., Dr.Med.

National Aeronautics and
Space Administration

Johnson Space Center
Houston, Texas 77058

July 2016

Available from:

NASA Center for AeroSpace Information
7115 Standard Drive
Hanover, MD 21076-1320

National Technical Information Service
5301 Shawnee Road
Alexandria, VA 22312

Available in electric form at http://ston.jsc.nasa.gov/collections/TRS

TABLE OF CONTENTS

ACRONYMS iv

DEFINITIONS v

I. INTRODUCTION 1

II. ATTENDEES 1

III. MEETING AGENDA 2

IV. THE NEED FOR PARTIAL-GRAVITY ANALOGS 3

V. POTENTIAL PARTIAL-GRAVITY ANALOGS 4

Ground-Based Analogs 5

Space-Based Analogs 22

Computational Modeling 25

Additional Suggestions for Analogs 28

VI. MOST SUITABLE PARTIAL GRAVITY ANALOGS BY HUMAN HEALTH COUNTERMEASURES DISCIPLINE 29

Rationale and background for analog scores (Tables 2 & 3) by each Human Health Countermeasures science discipline 33

VII. SCORES AND PRIORITY FOR PARTIAL GRAVITY ANALOGS – COMBINED 38

VIII. INPUTS FROM THE OTHER HUMAN RESEARCH PROGRAM ELEMENTS 39

IX. CONCLUSIONS 40

X. RECOMMENDATIONS 41

ACRONYMS

AG	artificial gravity
AGREE	Artificial Gravity Research with Ergometric Exercise
ARGOS	Active Response Gravity Offload System
BHP	Behavioral Health & Performance
CO_2	carbon dioxide
CVP	central venous pressure
DAP	Digital Astronaut Project
ESA	European Space Agency
EVA	extravehicular activity
ExMC	Exploration Medical Capability
GRF	ground-reaction force
GVS	galvanic vestibular stimulation
HDT	head-down tilt
HHC	Human Health Countermeasures
HRP	Human Research Program
HUBR	head-up bed rest
HUT	head-up tilt
ICV	Integrated Cardiovascular
IMAG	International Multidisciplinary Artificial Gravity
ISS	International Space Station
JAXA	Japan Aerospace Exploration Agency
LBNP	lower body negative pressure
LBPP	lower body positive pressure
LSMMG	Low-Shear Modeled Microgravity
MEDES	Médecine et de Physiologie Spatiales (French Institute for Space Medicine and Physiology)
NASA	National Aeronautics and Space Administration
NBL	Neutral Buoyancy Laboratory
NEEMO	NASA Extreme Environment Mission Operations
OSaD	Oxidative Stress and Damage Discipline
PGA	partial-gravity analog
POGO	partial-gravity simulator
RCF	Rodent Centrifuge Facility
RWV	Rotating Wall Vessel
rpm	revolutions per minute
SM	sensorimotor discipline
SHFH	Space Human Factors and Habitability
VIIP	Visual Impairment Intracranial Pressure
WI	water immersion

DEFINITIONS

Upper-case "G" vs. lower-case "g"

G is the ratio of an applied acceleration "a" to Earth's gravitational constant "g". Thus, G = a/g with g = 9.81 ms-2 (Glaister & Prior, 1999).

Glaister DH, Prior ARJ. The effects of long duration acceleration. In: Ernsting J, Nicholson AN, Rainford DJ (eds), Aviation Medicine. 3rd Edition, Oxford: Butterworth & Heinemann, pp. 128-147, 1999.

(This page intentionally left blank.)

I. INTRODUCTION

The Human Health Countermeasures (HHC) Element within the National Aeronautics and Space Administration (NASA) Human Research Program (HRP) convened a half-day workshop in February 2015 focusing on potential analogs that can simulate exposure to partial gravity (also known as hypogravity, equal to a G level between 0 and 1). Partial-gravity environments may be found on planetary surfaces such as the Moon and Mars, and in spacecraft using artificial gravity (AG). Analogs that simulate effects of such partial gravity would allow researchers to determine what level of partial gravity is the most effective to mitigate the negative physiological effects of weightlessness, or if additional countermeasures are required. To that end, scientists and managers from the different HHC disciplines and HRP elements were invited to provide inputs and discuss the utility of the different potential partial-gravity analogs (PGA). The following is a summary of these discussions.

II. ATTENDEES

Organizers

1. **Peter Norsk**
2. **Ronita Cromwell**
3. **Yael Barr**
4. **LaRona Smith**

Participants

1. **Tacey Baker**
2. **David Baumann**
3. **Jacob Bloomberg**
4. **John Charles**
5. **Gilles Clément**
6. **Brian Crucian**
7. **Charlene Gilbert**
8. **Thomas J. Goodwin**
9. **Craig Kundrot**
10. **Lauren Leveton**
11. **Lealem Mulugeta**
12. **Jason Norcross**
13. **Christian Otto**
14. **Zarana Patel**
15. **Lori Ploutz-Snyder**
16. **Robert Ploutz-Snyder**
17. **Millard Reschke**
18. **David Reyes**
19. **Jeffrey Ryder**
20. **Mark Shelhamer**
21. **Jean Sibonga**
22. **Jeffrey Smith**
23. **Scott M. Smith**
24. **Jeffrey Somers**
25. **Michael Stenger**
26. **Laura Taylor**
27. **Alexandra Whitmire**
28. **Mihriban Whitmore**
29. **Virginia Wotring**

III. MEETING AGENDA

Time	Topic	Presenter(s)
8:00 – 8:10	Welcome and Introduction	*Peter Norsk*
8:10 – 8:25	HHC Artificial Gravity Research Project	*Gilles Clément*
8:25 – 8:50	Partial-Gravity Analogs	*Peter Norsk*
8:50 – 9:00	Review of Inputs from HHC Lead Scientists	*Peter Norsk*
9:00 – 10:00	Roundtable Discussion (Part 1) HHC Lead Scientists	*Moderator:* *Ronita Cromwell*
10:00 – 10:15	Coffee Break	*All*
10:15 – 11:15	Roundtable Discussion (Part 2) HHC Lead Scientists and Element Scientists	*Moderator:* *Yael Barr*
11:15 – 11:25	Summary and Conclusions	*All*
11:25 – 11:30	Final Product: Workshop Document to HRP Management	*All*
11:30	Wrap – Up and Adjourn	*Peter Norsk*

IV. THE NEED FOR PARTIAL-GRAVITY ANALOGS

Understanding the dose-response relationship between the G level an individual is exposed to (dose) and the physiological response is of great importance to future missions to planetary bodies with partial gravity, as well as for provisioning of AG inside future spacecraft and bases. The determination of this dose-response relationship (Figure 1) is one of the leading gaps addressed by HHC's AG project. Since human access to partial gravity by centrifugation during space missions is not possible in the near future, PGAs (both terrestrial and in space) are needed to investigate the reactions of biological systems to such exposures.

The use of PGAs will assist in answering 2 main questions:

1) What are the protective effects of lunar and Martian gravity against physiological deconditioning?
2) What range of G levels is protective during space transit missions?

PGAs can also be used to validate potential AG prescriptions for space missions.

This knowledge will be used to inform vehicle designers on whether AG is needed, and if so, the requirements for AG level and duration.

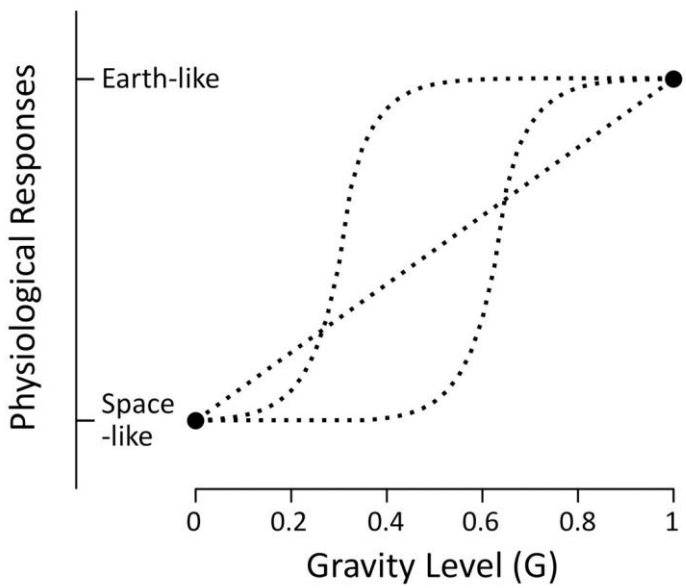

Figure 1. *Hypothetical graded dose-response curves for gravitational levels between 0 and 1 G. The main purpose of the workshop was to discuss the potential use of partial-gravity analogs to determine these relationships (adapted from Paloski & Charles, 2014 International Workshop on AG, NASA/TM-2014-217394).*

V. POTENTIAL PARTIAL-GRAVITY ANALOGS

Several PGAs were discussed at the workshop (Table 1).

Table 1. *The PGAs are classified according to their suitability for supporting human, animal, and tissue-based cellular studies. Analogs are further subdivided into ground-based and space-based, as well as into those that offer acute exposure (lasting seconds to hours) and those that allow chronic or long-term exposures (lasting days to months).*

Ground-Based Analogs

Name of analog	Species suitability	Exposure duration
Parabolic flight	Human	Acute
Head-up tilt	Human	Acute
Supine or head-down tilted short-radius centrifugation	Human	Acute
Whole-body weighted-garment water immersion	Human	Acute
Lower-body positive pressure (LBPP)	Human	Acute
Overhead suspension	Human	Acute
Head-out graded water immersion	Human	Acute
Head-out graded dry immersion	Human	Chronic
Long-radius centrifugation (upright, supine, or head-down tilted)	Human	Acute and chronic
Head-up bed rest	Human	Chronic
Computational modeling	Human, animal	Acute and chronic
Animal suspension	Animal	Chronic
Rotating-Wall Vessel (RWV)	Cells or tissue cultures	Chronic

Space-Based Analogs

Name of analog	Species suitability	Exposure duration
Short-radius human centrifugation	Human	Acute
Large-radius human centrifugation	Human	Chronic
Short-radius animal centrifugation	Animal	Chronic
Rotating-Wall Vessel (RWV)	Cells or tissue cultures	Chronic

GROUND-BASED ANALOGS

Parabolic flight

A parabolic flight involves an aircraft flying in a repetitive parabolic pattern of increasing and decreasing altitude and speed (Figure 2). During the upper part of the parabola, 20 seconds of either weightlessness or partial gravity are generated, whereas during the lower part of each parabola, about 40 seconds of 1.8-2.0 G are produced. A typical flight includes 30-40 parabolas. By varying the aircraft's pitch angle (the angle between the aircraft's longitudinal axis and the horizontal plane) different levels of gravity are achieved; for example, a pitch angle of 47° provides 20 seconds of microgravity, a pitch angle of 42° provides 25 seconds of 0.16 G (lunar gravity), and a pitch angle of 38° provides 32 seconds of 0.38 G (Martian gravity).

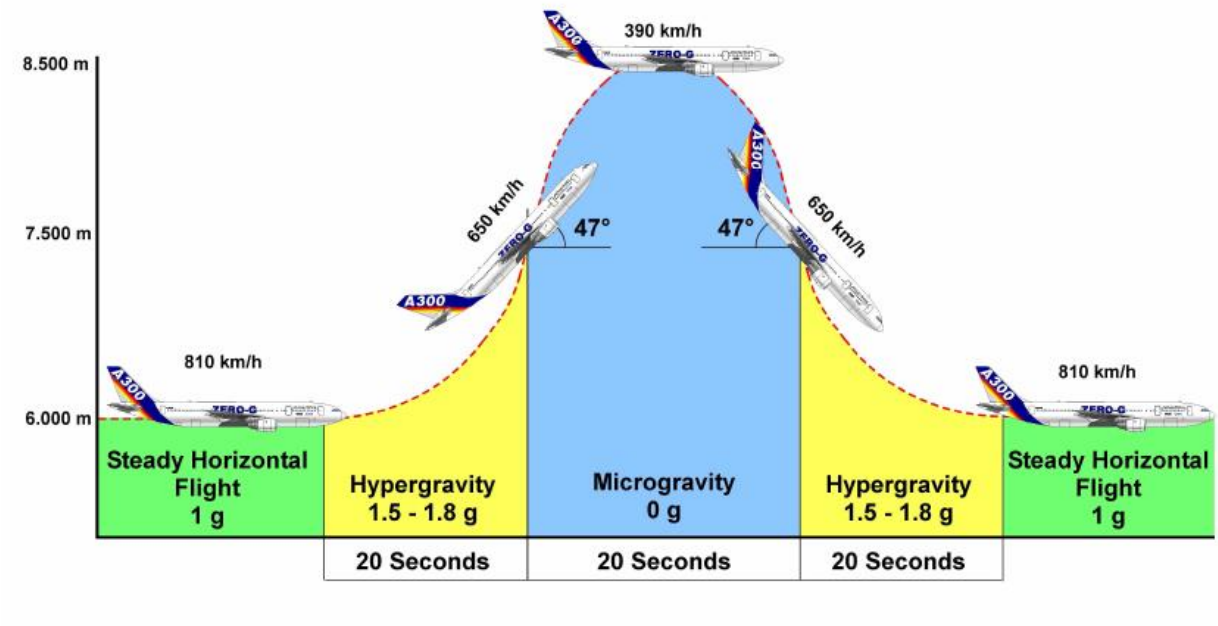

Figure 2. *Graph showing the trajectory of a parabolic aircraft over time, and the gravity level experienced by those flying inside the aircraft. Image credit: ESA, Novespace. Image obtained from the Earth Observation Portal at https://directory.eoportal.org/web/eoportal/airborne-sensors/airbus-a310-zero-g.*

Parabolic flight is conducive to biological studies of cells, plants, and animals, and physiological studies in humans. Technology can be tested and validated as well. One obvious limitation is the short duration of exposure, which limits studies to acute responses to changing G levels. Another limitation is the intervening hypergravity phases. It is possible to incrementally increase the G level by steps of 0.1 between series of parabolas to investigate thresholds of G effects.

Parabolic flight campaigns that included partial-G levels between 0 and 1 have been held around the world, for example in the United States (coordinated by Zero-G Corporation and by NASA's Flight Analogs Project), Europe, Canada, Japan, and Russia.

Selected references:

- Pletser V, Winter J, Duclos F, Bret-Dibat T, Friedrich U, Clervoy JF, Gharib T, Gai F, Minster O, Sundblad S. The first joint European partial-G parabolic flight campaign at Moon and Mars gravity levels for science and exploration. Microgravity Science Technol 2012; 24: 383-95.
- Karmali F, Shelhamer M. The dynamics of parabolic flight: flight characteristics and passenger percepts. Acta Astronaut. 2008; 63(5-6):594-602.

Head-up tilt / bed rest

Short-duration (up to several hours) and long-duration (days to months) head-up tilt (HUT) relative to the horizontal plane have been used to simulate partial gravity. For example, 9.5° HUT simulates lunar gravity by generating 0.16 G along the subject's longitudinal body axis, and 22.4° HUT simulates Martian gravity (0.38 G). These tilt angles allow for partial mechanical unloading along the long axis, although Earth's gravity continues to act perpendicular to the horizontal and cause compression of dependent tissues that is not present in true weightlessness. One limitation of this analog is the restriction of movement that is inherent to this model. With passive HUT, due to lack of muscle pump activity, slow extravasation of fluid will occur from the intravascular space. For that reason, some investigators have suggested (and implemented) application of graded compression stockings for counter-pressure. In addition, modeling by NASA's Digital Astronaut Project (DAP) has shown that addition of compression stockings more closely simulates the fluid shifts expected during exposure to partial gravity. For lunar gravity, this force ranges from 12 mmHg at the thigh to 18 mmHg at the knee.

HUT is generally possible at any bed rest facility that is geared toward head-down tilt (HDT) studies, with some equipment modification. Some studies have been conducted simulating 6 days of lunar missions with 16 daily hours of alternating "standing" and "sitting" while tilted at 9.5º HUT, and 8 hours of supine rest and/or sleep (Figure 3). Other studies have simulated both the transit and the stay on the lunar surface. Subjects were exposed to several days of HDT simulating the outbound flight, followed by several days of HUT to simulate the planetary surface phase, concluding with several days of HDT to simulate the transit back to Earth.

Standing Sitting

Figure 3. *Images demonstrating two subject postures during head-up tilt / bed rest, simulating the effects of standing (left) and sitting (right) in lunar gravity (9.5° HUT). Images courtesy of NASA's Flight Analogs Project.*

Selected references:

- Cavanagh PR, Rice AJ, Licata AA, Kuklis MM, Novotny SC, Genc KO, Englehaupt RK, Hanson AM. A novel lunar bed rest analogue. Aviat Space Environ Med. 2013 Nov; 84(11):1191-5.
- Pavy-Le Traon A, Allevard AM, Fortrat JO, Vasseur P, Gauquelin G, Guell A, Bes A, Gharib C. Cardiovascular and hormonal changes induced by a simulation of a lunar mission. Aviat Space Environ Med. 1997 Sep; 68(9):829-37.
- Louisy F, Guezennec CY, Güell A. Leg vein hemodynamics during bedrest simulating lunar trip. J Gravit Physiol. 1994 May; 1(1):P100-1.

Head-out graded (wet) water immersion

In head-out graded water immersion (WI) a subject is placed in a water tank in the seated position, with the level of water reaching up to the mid-chest, the neck, or any other level. Exposure is typically for up to 6-12 hours, and is limited by the fact that the water is in contact with the subject's skin for the duration of the exposure (subjects wear only a bathing suit) and maceration of the skin of the palms and soles will ensue with longer exposures. WI is known to elicit cephalad fluid shifts due to counterbalancing of the G-induced hydrostatic fluid gradients, which lowers the vascular capacity of the dependent vessels and displaces fluids toward the upper parts of the body (Figure 4). Consequently, central blood volume and central venous pressure (CVP) increase, sympathetic vasomotor tone decreases, and a diuresis and a natriuresis ensue. These changes increase in magnitude the higher the level of immersion. Immersion to the level of the hip does not result in changes to CVP, but still leads to shifts of interstitial fluids into the vasculature, leading to an increase in plasma volume, a decrease in colloid-oncotic pressure, and increased diuresis and natriuresis. While shifts of fluid volume into the thorax occur in this model as in weightlessness (0 G), the mechanism for the fluid shift and the consequent downstream physiological effects differ, because in WI there is an elevated interpleural pressure surrounding

the thoracic blood vessels and the heart, caused by compression of the thorax, while in 0 G pressure on both the lower extremities and the thorax is abolished.

Studies using this 0 G analog have been conducted in the USA, Europe, and Russia. It has not been used as a PGA yet, although even casual observations during watersports demonstrate the mechanical unloading effects of such buoyancy. Presumably the level of water generates local hydrostatic pressure equivalents to a given gravity level. This remains, however, to be validated.

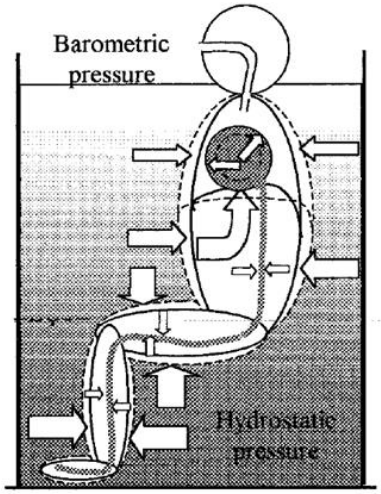

Hydrostatic pressure

- limits peripheral vascular capacitance
- limits gaseous pulmonary capacity
- increases pleural pressure
- is more transmitted to interstitial than intravascular compartment , which
- promotes passage of interstitial water into plasma (except in the lung)

Restricted vascular capacitance

- shifts blood into the heart and thoracic vessels
- increases intravascular pressures (venous, arterial)
- supports a high tissue perfusion flow
- distends low- and high-pressure baroreceptors
- decreases orthosympathetic tone, and the release of renin, aldosterone, vasopressin (lowered vascular resistance)
- increases ANP release (capillary permeability)

Kidney functions

- are driven to excreting water and sodium
- → which *unveil after* immersion (disappearance of external hydrostatic pressure)
  - decreased water stores (plasma volume, interstitial and intracellular compartments)
  - a decreased sodium balance

Fig 1. The effects of head-out thermoneutral immersion (up to 12 hours). Solid lines indicate actual body contours during immersion; broken lines indicate body contours in the air; empty arrows indicate hydrostatic pressure.

Figure 4. *The physiological effects of graded head-out water immersion, shown here with water level up to the neck.*

Reprinted from the American Journal of Kidney Diseases, Volume 38/Number, Regnard J, Heer M, Drummer C, and Norsk P, pages 668-74, copyright 2001, with permission from Elsevier.

Selected references:

- Regnard J, Heer M, Drummer C, Norsk P. Validity of microgravity simulation models on earth. Am J Kidney Dis. 2001 Sep; 38(3):668-74.
- Larsen AS, Johansen LB, Stadeager C, Warberg J, Christensen NJ, Norsk P. Volume-homeostatic mechanisms in humans during graded water immersion. J Appl Physiol (1985). 1994 Dec; 77(6):2832-9.
- Johansen LB, Pump B, Warberg J, Christensen NJ, Norsk P. Preventing hemodilution abolishes natriuresis of water immersion in humans. Am J Physiol. 1998 Sep; 275(3 Pt 2):R879-88.

Supine or head-down tilted short-radius centrifugation

Most short-radius centrifuges include a horizontal platform that accommodates a subject in the supine or lateral decubitus posture. The platform can also be configured for a HDT (Figure 5). Such centrifuges have a radius ranging from 1.5 to 2.5 m, so a high rotation rate (up to 30 rpm) is needed to generate a centripetal acceleration of 1 G. For spaceflight countermeasures, such centrifuges would be used intermittently, for short periods (minutes to hours).

During centrifugation the subject's head is toward the axis of rotation of the centrifuge while the feet are at the periphery of the centrifuge. Centrifugation provides stimulation of the graviceptors and proprioceptive receptors such that a sensation of standing upright is created, especially if the feet are pressed against a supporting platform. It also results in blood being displaced toward the lower extremities.

The radius and rotation rate can be adjusted to create a variety of gravity levels at the head, heart, and/or feet. Typically, 1 G at the heart is used (because of its proximity to the body center of mass), which results in about 2.5 G at the feet. The shift of blood volume caudally is similar to the vertical hydrostatic gradient that an upright person would be exposed to. Mild exercise (for example, shifting weight from foot to foot, moderate heel raises, and shallow knee bends) is performed concurrently to avoid orthostasis. One consequence of the high rotation rate is the occurrence of cross-coupled angular accelerations at the vestibular level when subjects move their head while rotating, which can induce motion sickness. This negative effect can be managed by restraining the subject's head during centrifugation, or by training the individuals to progressively increase the amplitude and/or speed of voluntary head movements until desensitization occurs.

As of today, 18 studies have been conducted worldwide with supine centrifugation during bed rest of 3-28 days (see review in Clement, 2015, Table 4). At NASA, an International Multidisciplinary Artificial Gravity (IMAG) study was conducted in 2007, using HDT centrifugation. In this study, 8 subjects were spun on a -6° HDT centrifuge for 1 hour daily, during a 21-day bed rest campaign, and their responses after bed rest were compared to those of a control group, demonstrating cardiovascular and musculoskeletal benefits with no untoward effects related to the high (30 rpm) rotation rate.

Given the short duration of centrifugation possible with this type of analog, it is more suitable for investigations of acute changes to the sensorimotor, cardiovascular, and musculoskeletal systems.

Figure 5. *The tilted configuration of the centrifuge used in the NASA AG study. The centrifuge can accommodate 2 subjects in a HDT posture. A subject can be seen on the left of the two platforms. Photo courtesy of NASA/Wyle and obtained at the Red Orbit website at http://www.redorbit.com/news/space/147287/nasa_gives_artificial_gravity_a_spin/*

Selected references:

- Clement G. Artificial Gravity Evidence Report, 2015. NASA Human Research Program. Available at: https://humanresearchroadmap.nasa.gov/evidence/other/AG%20Evidence%20Report.pdf
- Clément GR, Bukley AP, Paloski WH. Artificial gravity as a countermeasure for mitigating physiological deconditioning during long-duration space missions. Front. Syst. Neurosci. 2015; 9:92.
- Young LR, Paloski W. Short radius intermittent centrifugation as a countermeasure to bed-rest and 0-G deconditioning: IMAG pilot study summary and recommendations for research. J Gravit Physiol 2007; 14:31-3.
- Young LR, Hecht H, Lyne LE, Sienko KH, Cheung CC, Kavelaars J. Artificial gravity: head movements during short-radius centrifugation. Acta Astronaut. 2001; 49(3-10):215-26.
- Hecht H, Brown EL, Young LR. Adapting to artificial gravity (AG) at high rotational speeds. J Gravit Physi ol. 2002 Jul; 9(1):P1-5.

Whole-body weighted-garment water immersion

Underwater analogs for partial gravity include the Neutral Buoyancy Laboratory (NBL) and the NASA Extreme Environment Mission Operations (NEEMO). These analogs allow use of high-fidelity extravehicular activity (EVA) simulations and mission environments. The NBL supports suited and shirtsleeve (e.g. in a swimsuit or dive suit) activities for short durations (< 6 hours) (Figure 6). NEEMO supports shirtsleeve activities only, but provides a mission-like environment with an underwater habitat (Figure 7). Of note, only during the diving portions of a NEEMO mission (outside of the habitat) can the crew be maintained at partial gravity.

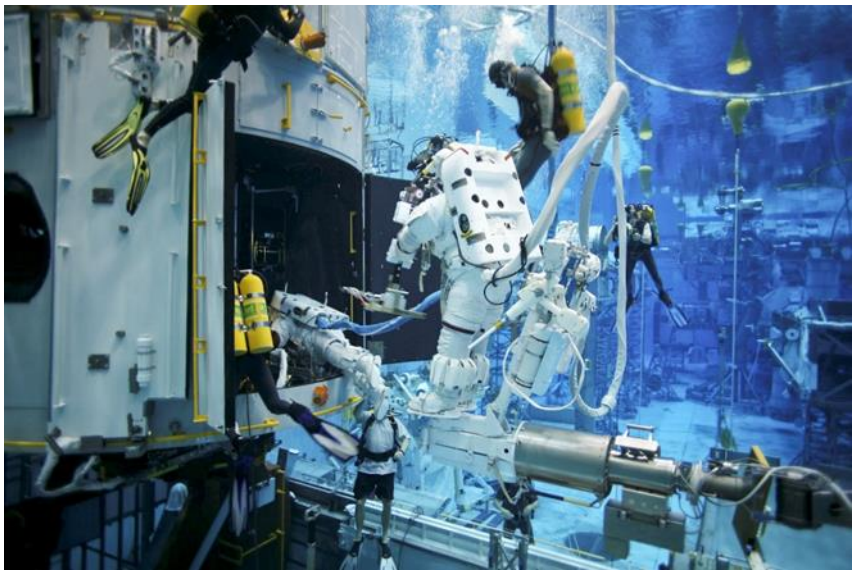

Figure 6. *Example of EVA training in the NBL.*

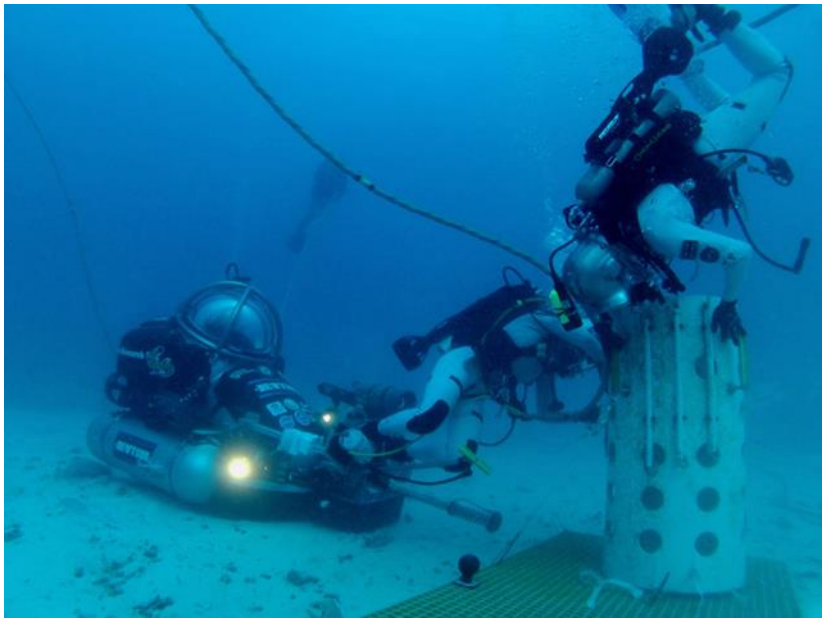

Figure 7. *NEEMO EVA Simulation using a DeepWorker submarine as a rover supporting two EVA crewmembers.*

Partial gravity during diving is simulated by the placement of additional weights along the suited or unsuited subject. Target weight is confirmed by measurement of the subject's underwater weight (standing on force plates) or by predetermined analysis of the needed effective added weight given a certain mass, density, and targeted gravity level. Although it is possible to accurately weight a diver under water to achieve a certain analogous gravity level, the water drag and ability to swim can compromise the simulation of more dynamic tasks at that simulated gravity level.

Note that this model produces divergent hydrostatic and mechanical loading effects. Whole-body immersion, whether weighted or unweighted, without a pressurized outer garment

(such as a space suit) exposes the body to external hydrostatic pressures that match those internal, mimicking the fluid-redistribution potential of weightlessness. Immersion inside a pressurized garment eliminates the external hydrostatic pressures, permitting the fluid distribution of normal gravity even if the suit is externally weighted to provide hypogravity-like mechanical loading.

The EVA Physiology Discipline stands to learn the most from this platform because it is primarily a short-duration partial-gravity simulation. However, any discipline needing to understand some of the physiological costs of conducting an EVA would also benefit. Other disciplines needing longer exposures or access to more advanced data collection methods, which are harder to use underwater, may not be able to utilize this analog.

The largest underwater EVA facility in the world is NASA's NBL in Houston, Texas. The NBL is primarily a platform used by NASA for weightless EVA training and has only rarely been used as a research platform for partial gravity. Smaller facilities exist in other space centers such as those in Russia and the European Space Agency (ESA). The University of Maryland has the only neutral buoyancy facility on a college campus, but it is unknown if it has been used for partial-gravity simulations. NEEMO is primarily used for mission and EVA architecture and has also been used for behavioral health and performance studies because of its mission-like simulation setting.

Selected references:

- Chappell S, Abercromby A, Gernhardt M. NEEMO 15: Evaluation of human exploration systems for near-Earth Asteroids. Acta Astronautica 2013; 89:166-178.
- Chappell S, Abercromby A, Todd W, Gernhardt M. Final Report of NEEMO 14: Evaluation of a Space Exploration Vehicle, Cargo Lander, and Crew Lander during Simulated Partial-gravity Exploration and Construction Tasks. NASA Technical Report TP-2011-216152, 2011. Available at http://ston.jsc.nasa.gov/collections/trs/_techrep/TP-2011-216152.pdf
- Klein J, Conkin J, Gernhardt M, Srinivasan R. Metabolic expenditures during extravehicular activity: spaceflight versus ground-based simulation. Aviat Space Environ Med 2008; 79(3):296 (conference abstract).
- Gast MA, Moore SK. A glimpse from the inside of a space suit: What is it really like to train for an EVA? Acta Astronautica 2011; 68:316-325.
- Neufeld MJ, Charles JB. Practicing for Space Underwater: Inventing Neutral Buoyancy Training, 1963-1968. Endeavour 2015; 39:147-159.

Lower body positive pressure

Lower body positive pressure (LBPP) was developed with the intent of promoting patient rehabilitation by allowing exercise under conditions of limited weight-bearing. This is accomplished using a treadmill situated inside a pressurized, waist-high container in which the patient stands, supported by inflatable structures that provide gravitational unloading (Figure 8). For example, when 50 mmHg are applied inside the structure, the patients ambulate with only 10% of their body weight. If less pressure is used, the patient's simulated body weight can range from 10% to 100% of the actual weight, in 1% increments. Walking, running, and climbing-type activities can thus take place while patients recover from orthopedic trauma or surgery, stroke, spinal cord injury, and other conditions.

The LBPP device simulates partial gravity by unloading the lower body's musculoskeletal system, including the tactile and proprioceptive inputs. In addition, use of LBPP also affects the cardiovascular system, increasing mean arterial pressure, cardiac output, and stroke volume, while decreasing heart rate and vascular resistance (when compared to 1*g* upright posture). Fluid shifts occur as well, from the lower leg to the upper leg and the abdomen. In a study by Kostas et al (2014), HUT and LBPP both resulted in cardiovascular changes that simulated those anticipated in reduced gravity.

An alternative approach to LBPP that creates similar cardiovascular effects (though not musculoskeletal unloading) is to use a lower body compression garment, such as the Kentavr "anti-gravity" suit worn by crewmembers landing on Soyuz vehicles, to counteract the gravitationally-induced hydrostatic force in the enclosed tissues even during upright ambulation.

LBPP is commercially available around the world.

Figure 8. *Example of a lower body positive pressure treadmill, the AlterG Anti-Gravity treadmill. From McNeill et al, 2015. Image reproduced with permission of National Strength and Conditioning Association.*

Selected references:

- Macias BR, Groppo ER, Eastlack RK, Watenpaugh DE, Lee SM, Schneider SM, Boda WL, Smith SM, Cutuk A, Pedowitz RA, Meyer RS, Hargens AR. Space exercise and Earth benefits. Curr Pharm Biotechnol. 2005 Aug; 6(4):305-17.
- McNeill DK, de Heer HD, Bounds RG, Coast JR. Accuracy of unloading with the anti-gravity treadmill. J Strength Cond Res. 2015 Mar; 29(3):863-8.
- Kostas VI, Stenger MB, Knapp CF, Shapiro R, Wang S, Diedrich A, Evans JM. Cardiovascular models of simulated Moon and Mars gravities: head-up tilt vs. lower body unweighting. Aviat Space Environ Med. 2014 Apr; 85(4):414-9.
- Morukov B, Afonin B, Vassilieva G, Ivanov O, Morukov O, Nichiporuk I. Novel way of microgravity ground simulation. 6th International Congress of Medicine in Space and Extreme Environments (ICMS). September 16-19, 2014. Berlin, Germany (abstract).
- Platts SH, Tuxhorn JA, Ribeiro LC, Stenger MB, Lee SMC, Meck JV. Compression garments as countermeasures to orthostatic intolerance. Aviat Space Environ Med 2009; 80:437-42.

Overhead suspension

Overhead suspension systems provide consistent vertical offload that simulates partial gravity. Advanced systems such as the Active Response Gravity Offload System (ARGOS) and the partial-gravity simulator nicknamed POGO (both available at the Johnson Space Center) allow motion of the subject along the x, y, and z translational axes and use gimbal interfaces to allow movement in all three rotational axes (Figure 9). Subjects can be tested while wearing a spacesuit or in shirtsleeves.

Figure 9. *The ARGOS system.*

The ARGOS facility uses computer-controlled electric motors to facilitate a subject's motion along all axes. The vertical axis connects to the subject with a steel cable and continuously measures the exerted force. The control system commands the motor to raise or lower as the subject moves to maintain a constant offload force. The horizontal axes are also driven by electric motors that are attached to friction-drive wheels. Motion of the subject is measured by a cable angle sensor, which is used to command the system to keep the lifting mechanism centered above the subject.

Note that this technique provides mechanical offloading only to the extent of reducing ground-reaction force (GRF), but does not affect the internal hydrostatic pressure or any joint loads not directly associated with the GRF.

The EVA Physiology group is the primary discipline in need of this PGA. Other disciplines such as exercise physiology, cardiovascular physiology, biomechanics, and sensorimotor physiology may have relevant research to be performed with overhead suspension as well.

Several studies have already been conducted using this platform as a PGA, the most well-known of which were the 10-km EVA walk-back and the integrated tests of human performance in a spacesuit during the Constellation Program.

While the ARGOS and POGO systems are available at the Johnson Space Center, vertical offload systems are commercially available and may be available worldwide. However, they are primarily intended for rehabilitation activities, providing unloading in the z-axis only (weight relief, using a chest-strap harness) and not providing accurate rotational degrees of freedom to fully simulate partial gravity.

Selected references:

- http://www.nasa.gov/centers/johnson/engineering/integrated_environments/active_response_gravity/
- Norcross JR, Chappell SP, Clowers KG, Clark T, et al. Characterization of partial gravity analog environments for EVA suit testing. NASA Technical Report TM-2010-216139. NASA Johnson Space Center, Houston, TX, 2010. Available at: http://ston.jsc.nasa.gov/collections/trs/_techrep/TM-2010-216139.pdf
- Norcross JR, Clowers KG, Clark T, Harvill L, et al. Metabolic costs and biomechanics of ambulation in a planetary suit. NASA Technical Report TP-2010-216115. NASA Johnson Space Center, Houston, TX, 2010. Available at: http://ston.jsc.nasa.gov/collections/TRS/_techrep/TP-2010-216115.pdf
- Norcross JR, Clowers KG, Clark T, Harvill L, et al. Metabolic costs and biomechanics of inclined ambulation and exploration tasks in a planetary suit. NASA Technical Report TP-2010-216125. NASA Johnson Space Center, Houston, TX, 2010. Available at: http://ston.jsc.nasa.gov/collections/trs/_techrep/TP-2010-216125.pdf
- Norcross JR, Lee LR, Clowers KG, Morency RM, et al. Feasibility of performing a suited 10 km ambulation on the Moon: Final report of the EVA walkback test (EWT). NASA Technical Report TP-2009-214796. NASA Johnson Space Center, Houston, TX, 2009. Available at: http://ston.jsc.nasa.gov/collections/TRS/_techrep/TP-2009-214796.pdf
- Ellman R, Spatz J, Cloutier A, Palme R, Christiansen BA, Bouxsein ML. Partial reductions in mechanical loading yield proportional changes in bone density, bone architecture, and muscle mass. J Bone Miner Res 2013; 28: 875-885.

Rotating-Wall Vessel

The Rotating-Wall Vessel (RWV) bioreactor, also known as Low-Shear Modeled Microgravity (LSMMG), is a device that emulates some of the characteristics that cells in a liquid medium are exposed to in microgravity through rotation of the liquid. The two main characteristics

of microgravity that are modeled by the RWV are constant suspension and an environment that lacks turbulent shear forces.

The RWV contains a cylindrical vessel completely filled with fluid and devoid of air bubbles, which is rotated about a horizontal axis (parallel to the ground) at an angular velocity appropriate to suspend particles of different sedimentation rates (cells, matrices, and tissue assemblies) in an emulation of continuous orbital free fall (Figure 10). This fluid mechanical simulation may theoretically be manipulated through a number of parameters, including speed of rotation and density of the medium, to achieve partial-gravity simulations on cells and tissues.

The RWV can be used for studying cells that are relevant to the following gravitational physiological disciplines: bone, muscle, cardiovascular, immunology, and neurology. The device has been used at length for studies emulating microgravity at 10^{-4} to 10^{-6} G. At this time it is unknown if it is possible to simulate partial gravity between 0 and 1 G using this device, but a public solicitation to elicit research proposals to investigate the feasibility of this model has been released by the NASA HRP and proposals are being evaluated for potential funding.

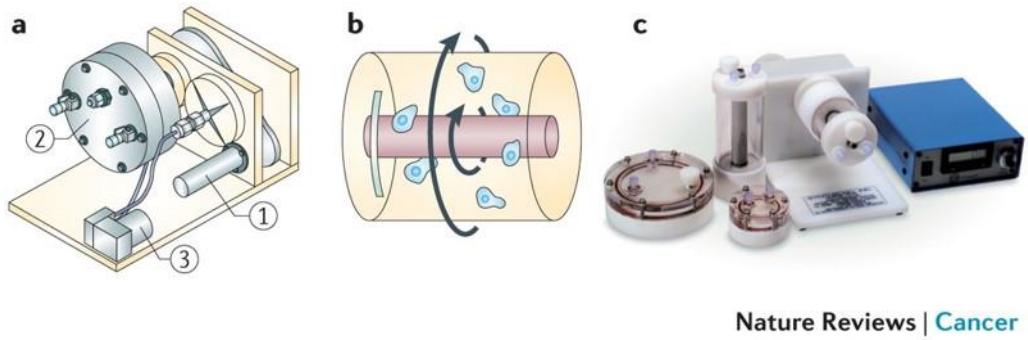

Figure 10. *Image reproduced with permission of Nature Publishing Group.*

a. *A schematic representation of the rotating wall vessel (RWV) illustrating the motor (1), which powers a belt that rotates the culture vessel (2) about its horizontal axis, is shown. Incubator air is pumped in (3), filtered, and delivered to the growing culture. Sample ports on the vessel exterior facilitate media exchange and sample acquisition.*

b. *A representation of three-dimensional constructs rotating within the vessel, about the horizontal axis, is shown.*

c. *A variety of vessel types permit culture volumes ranging from 10 ml to 500 ml. The image in part* ***c*** *was provided courtesy of Synthecon, Incorporated, USA.*

Selected references:

- Goodwin TJ, McCarthy M, Osterrieder N, Cohrs RJ, Kaufer BB. Three-dimensional normal human neural progenitor tissue-like assemblies: A model of persistent varicella-zoster virus infection. PloS Pathogens 2013; 9(8):e1003512.
- Vertrees RA, Zwishenberger JB, Boor PJ, Popov V, et al. Cellular differentiation in three-dimensional lung cell cultures. Cancer Biol Ther 2008; 7:3:404-12.
- Schwarz RP, Goodwin TJ, Wolf DA. Cell culture for three dimensional modeling in rotating-wall vessels: An application of simulated microgravity. J Tiss Cult Meth 1992; 14:51-8.

- Goodwin TJ, Prewett TL, Wolf DA, Spaulding GF. Reduced shear stress: A major component in the ability of mammalian tissues to form 3-dimensional assemblies in simulated microgravity. J Cell Biochem 1993 Mar; 51(3):301-11.
- Tsao YD, Goodwin TJ, Wolf DA, Spaulding GF. Responses of gravity level variations on the NASA/JSC bioreactor system. The Physiologist 1992; 35(1): 49-50.
- Wolf DA, Schwarz RP. Analysis of Gravity-Induced Particle Motion and Fluid Perfusion Flow in the NASA-Designed Rotating Zero-Head-Space Tissue Culture Vessel. NASA Technical Paper 3143, NASA Johnson Space Center, Houston, TX, 1991. Available at: http://ntrs.nasa.gov/archive/nasa/casi.ntrs.nasa.gov/19920004122.pdf

Head-out graded dry immersion

The head-out graded dry immersion model has been widely used in Russian studies, and to a limited degree in Europe and India as well. In dry immersion, the subject is submersed in thermoneutral water, but is separated from the water by an elastic waterproof fabric, thus remaining dry (Figure 11, Figure 12, and Figure 13). The simulation effects are very similar to those of wet head-out WI, with the exception that the shielding of the body surface from direct contact with the water allows the exposure to be conducted for much longer periods. With this model the subject experiences unloading that is typical of floating in water, as well as experiencing the effect of the water's hydrostatic pressure that (similarly to what is seen with the seated graded head-out WI discussed above) decreases the capacity of the lower extremity vasculature, thereby shifting fluids from the interstitium into the intravascular space, and from the lower part of the body toward the thorax. Subjects report the sensation of head and nasal congestion as in spaceflight. The model is thought to reproduce most of the physiological effects of actual microgravity, including fluid redistribution and relative central hypervolemia. Other similarities to spaceflight are the following:

a. back pain develops a few hours after the start of immersion but resolves by the 2nd or 3rd day;
b. sleep disturbances and lack of appetite occur; and
c. motion sickness has been reported from movement of the water in multi-person immersions in larger tanks.

Changes similar to those of microgravity may be seen in the sensorimotor, neuromuscular, cardiovascular, metabolic, hematopoietic, and immune systems, and therefore any of these physiological disciplines may benefit from use of this analog. However, the mechanism underlying those changes/signs/symptoms in dry immersion may be different from the mechanisms that operate in spaceflight. As an example, the mechanism of sensorimotor effects is different in dry immersion, and lacks the vestibular component seen in flight.

While horizontal immersion up to the neck is used to simulate weightlessness, immersion in different depths may potentially simulate partial gravity, because the hydrostatic pressure increases with the depth of immersion. Because the subject remains dry, this type of immersion can be sustained for days to weeks (typically 3-7 days, with the longest study reported to last for 56 days).

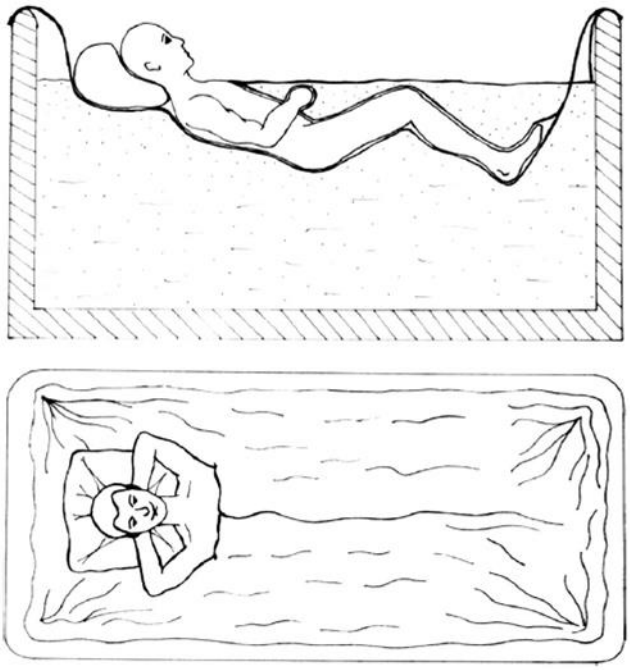

Fig. 1. Dry immersion (DI) method. The subject is immersed up to the armpits and separated from the water by waterproof fabric. *Top*: side view; *bottom*: view from above.

Figure 11. *Illustration of subject positioning inside a dry immersion tank.*
Fig. 1 in Navasiolava et al, 2010.

Republished with permission of American Journal of Physiology - Heart and Circulatory Physiology, from Navasiolava NM, et al. Enforced physical inactivity increases endothelial microparticle levels in healthy volunteers, Volume 299 (2), 2010. Permission conveyed through Copyright Clearance Center, Inc.

Figure 12. *Subject in a dry immersion study.*
Photo courtesy of E. Grimaud, CNES/MEDES, 2015.

Figure 13. *Subject in a dry immersion study.*
Photo courtesy of E. Grimaud, CNES/MEDES, 2015.

Selected references:

- Navasiolava NM, Dignat-George F, Sabatier F, Larina IM, Demiot C, Fortrat JO, Gauquelin-Koch G, Kozlovskaya IB, Custaud MA. Enforced physical inactivity increases endothelial microparticle levels in healthy volunteers. Am J Physiol Heart Circ Physiol. 2010; 299(2):H248-56.
- Navasiolava NM, Custaud MA, Tomilovskaya ES, Larina IM, Mano T, Gauquelin-Koch G, Gharib C, Kozlovskaya IB. Long-term dry immersion: review and prospects. Eur J Appl Physiol 2011; 111(7):1235-60.

Rotating rooms

Slow-rotation rooms are rotating laboratories for testing subjects in a rotating environment for up to several days (Figures 14 and 15). In previous studies, rotation rates have been relatively slow, ranging from 1 to 10 rpm. The G level at the periphery of the room is about 1.1 G for the fastest rotation rate in this range. Consequently, slow-rotation rooms are predominantly used to test the effect of Coriolis and cross-coupled angular acceleration, rather than the effects of G level per se.

Studies in slow-rotation rooms have been conducted in Pensacola and at Brandeis University, and at the Institute for Biomedical Problems in Moscow. In these studies, ambulatory subjects were tested for the effects of room rotation, functional capabilities, comfort thresholds, adaptation, and readaptation. While ambulatory studies in rotating environments are mostly geared toward testing of sensorimotor responses and human factors, studies can potentially be conducted with subjects in a HDT posture, thus in essence placing an analog of microgravity inside a continuously rotating environment. The rotation rate can be increased to enable gravity gradients to form along the body. Such studies have not been conducted to date, but could be done at the

facilities that currently exist such as at Brandeis University, or at NASA Ames Research Center. The NASA Ames Research Center centrifuge, which has a 52-foot diameter, is to undergo upgrades that will allow exposure of 8 ambulatory individuals to rotation up to 18.5 rpm, generating 1-2 G for up to 7 days.

The key issues to be studied in this type of analog include the sensorimotor, cardiovascular, and musculoskeletal effects of centrifugation. Cognitive assessments and team interaction could also be included in such studies.

Bed rest studies inside these rotating habitats will allow evaluating the importance of the venous blood pump in returning blood to the heart during a g-gradient centrifugation. Exercise devices and protocols can be used in the rotating habitat to enhance the countermeasure effectiveness and permit deconditioned subjects to tolerate the centrifugation. Investigations can also address sensorimotor adaptation to Coriolis and cross-coupled acceleration and their aftereffects after rotation, as well as the biomechanical consequences of Coriolis effects on limb and head movements during exercise, and steps to be taken to avoid stress injuries from any repetitive movements elicited as the subject attempts to counteract the imposed forces. Finally, studies of the human factors effects of extended exposure to centrifugation provided in slow-rotating platforms and long-radius centrifuges will help to determine how freely moving humans adapt to and perform in rotating environments.

Such studies can focus on adaptation and transient changes in performance, as well as long-term changes in locomotion, material handling, gross and fine motor control, postural balance, circadian and cognitive effects, and work-rest cycles. Because these rotating environments can serve as analogs to the conditions encountered in a spinning Mars transit vehicle, analysis of human habitability issues such as food preparation and eating, donning and doffing of garments, housekeeping, personal hygiene, sleeping conditions, off-duty activities, lifting and stowage capabilities, accommodations and affordances, and human interaction with displays and controls can also be examined and evaluated. The results of these studies can inform vehicle designers of critical issues before a decision is made to spin a Mars transit vehicle, and before the design of the vehicle is fixed.

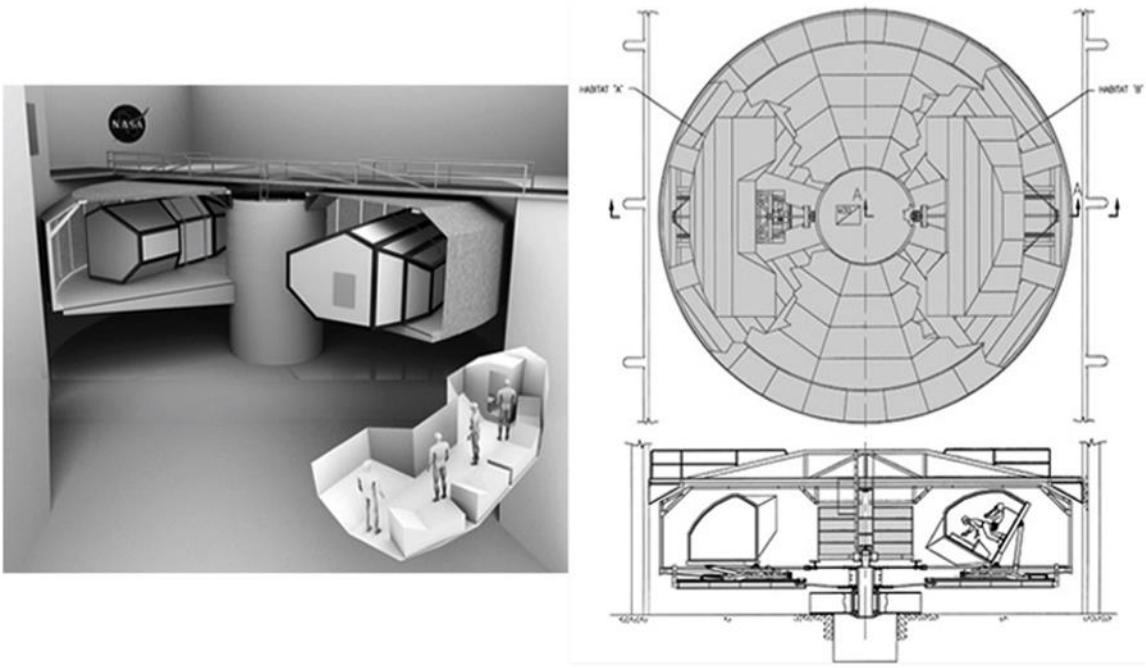

Figure 14. *NASA Ames 52-foot centrifuge with two live-aboard habitats (4 subjects each).*

Figure 15. *Brandeis University slow-rotation room.*

Selected references:

- Graybiel A, Kennedy RS, Knoblock EC et al. The effects of exposure to a rotating environment (10 rpm) on four aviators for a period of 12 days. Aerospace Med. 1965; 38: 733-754.
- Graybiel A, Clark B, Zarriello JJ. Observations on human subjects living in a "slow rotation room" for periods of two days. Arch Neurol. 1960; 3: 55-73.
- Lackner JR, DiZio P. Artificial gravity as a countermeasure in long duration spaceflight. J. Neurosci. Res. 2000; 62:169-176.

SPACE-BASED ANALOGS

Short-radius centrifugation for animals

Short-radius centrifugation has been conducted on animals in space since the 1970s. A variety of animal models (including fish, turtles, and rats) have been studied under centrifugation at both 1 g and partial gravity. Such centrifuges, signified by their small radius (35 cm) and high rotation rate (52 rpm), have flown on Salyut, Mir, and the Space Shuttle.

Two rodent centrifuges are planned for the International Space Station (ISS). Japan Aerospace Exploration Agency (JAXA) has developed a 15-cm radius centrifuge as part of the mouse habitat system housed in the Kibo module. It can generate 1 g at a rotation rate of 77 rpm. Six mice will be centrifuged at 1 g for 1-6 months and six other mice will live in 0 g for the same duration (Figure 16). Both groups will return to Earth using the SpaceX Dragon vehicle. The habitat is now on board the ISS. At this time, JAXA has no plans to use this mice centrifuge for partial gravity research.

At the time of this writing, NASA is funding the development of a Rodent Centrifuge Facility (RCF) that will accommodate as many as 14 modular rodent cages, which can be customized to accommodate 28 rats or 42 mice. The facility will be designed for providing continuous centripetal force at any level between 0 and 1 g for a minimum of 30 days of unattended operation, and will be able to accommodate experiments lasting up to 90 days. The facility is in early stages of development and does not yet have a target date for flight.

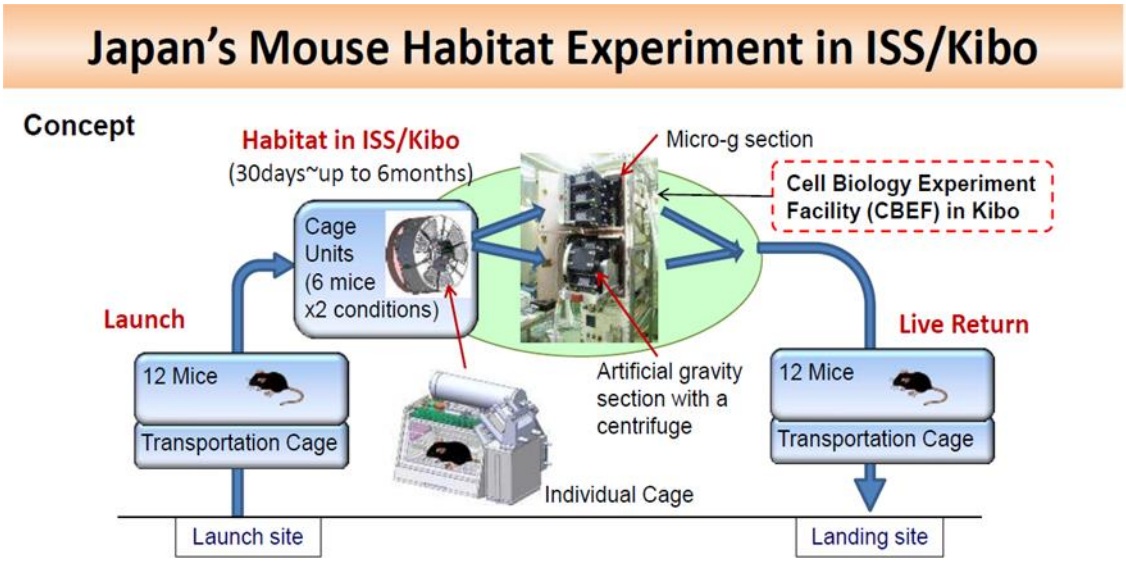

Figure 16. *Japan's mouse habitat experiment in ISS/Kibo.*
http://iss.jaxa.jp/en/kuoa/pdf/jk-joint_11/01_ASASHIMA_Prezen.pdf

Selected references:

- Clément G, Slenzka K (2006). Fundamentals of Space Biology: Research on Cells, Animals, and Plants in Space. Springer, New York.
- Clément G. Artificial Gravity Evidence Report. NASA HRP document, 2015. Available at: https://humanresearchroadmap.nasa.gov/evidence/other/AG%20Evidence%20Report.pdf

Short-radius centrifugation for humans

A short-radius centrifuge was flown as part of the Neurolab shuttle mission (STS-90) in 1998 (Figure 17). Developed by ESA, this off-axis rotator had a variable radius of 0.5 to 0.65 m that generated AG levels of 0.5 and 1 G. Depending on the position of the subject in the centrifuge, i.e. sitting or supine, AG forces were applied through the subject's ±Gy or –Gz axis, respectively.

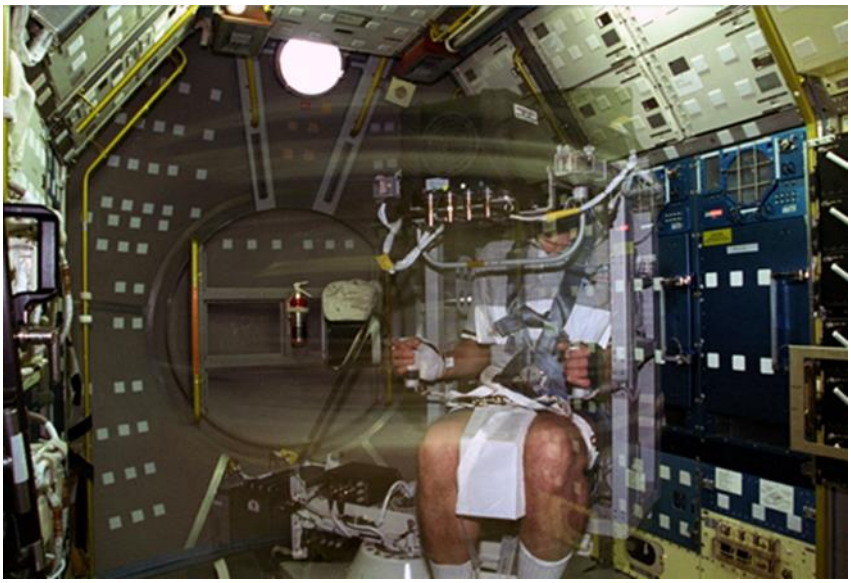

Figure 17. *The Neurolab centrifuge.*

A short-radius human centrifuge project titled Artificial Gravity Research with Ergometric Exercise (AGREE) was selected as part of an international solicitation in 2009 for use on board the ISS. The project was cancelled in 2013 after it was determined that the vibration loads generated by the proposed centrifuge could compromise the ISS structurally. The likelihood of a human-rated short-radius centrifuge being manifested to the ISS before 2024 is very slim, but it may be possible to integrate such a centrifuge on future vehicles.

Selected references:

- Clément G. Artificial Gravity Evidence Report. NASA HRP document, 2015. Available at:http://nspires.nasaprs.com/external/viewrepositorydocument/cmdocumentid=461587/solicitationId=%7b48135788-4986-9DF9-9C3C-D58012CEB899%7d/viewSolicitationDocument=1/AG%20Evidence%20Report%20May%202015.pdf
- Clément G, Moore ST, Raphan T, Cohen B. Perception of tilt (somatogravic illusion) in response to sustained linear acceleration during space flight. Exp Brain Res. 2001 Jun; 138(4):410-8.

Large-radius centrifugation

Large-radius centrifugation refers to rotation of a section of a space vehicle (with a radius that can range from 3-15 m), or rotation of the entire vehicle (radius ranging from 15-56 m and more) (Figure 18).

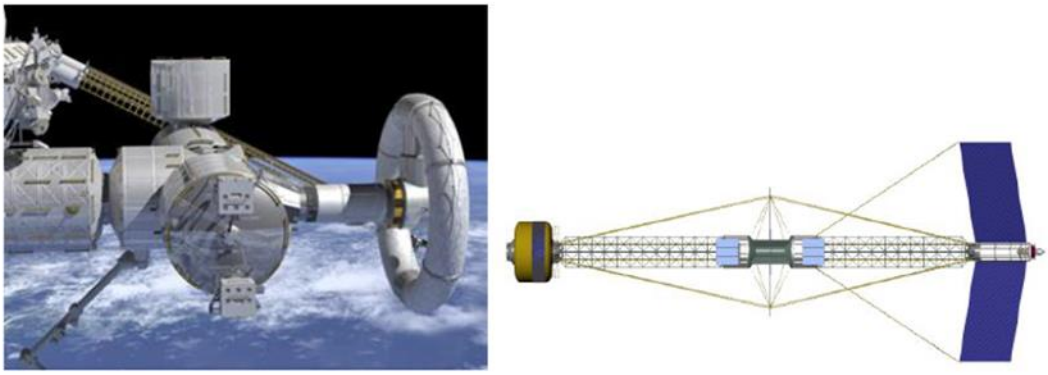

Figure 18. *Examples of rotating part of the vehicle (left image, Nautilus X-concept), or rotating the whole vehicle (right image, Fire Baton concept). From: 2014 International Workshop on Research and Operational Considerations for Artificial Gravity Countermeasures. Ames Research Center, February 19-20, 2014. Chairs: William H. Paloski, Ph.D., and John B. Charles, Ph.D. NASA/TM-2014-217394.*

Selected references:

- 2014 International Workshop on Research and Operational Considerations for Artificial Gravity Countermeasures. Ames Research Center, February 19-20, 2014. Chairs: *William H. Paloski, Ph.D., and John B. Charles, Ph.D.* NASA/TM-2014-217394.

Rotating Wall Vessel

The basics of RWV were presented in a section above. RWVs have flown in space on Mir, the Space Shuttle, and the ISS. Two NASA flight units that were certified for shuttle flight were scheduled to be flight certified for the ISS as part of a biotechnology effort, and their supporting hardware was shipped to the ISS in the early 2000s. However, the project was cancelled in 2005, with flight certification still in progress at that time, and the units were never flown. The supporting hardware was returned to Earth. If such units are flown, they can potentially be used to create partial g. Of note, the flight units had one large vessel/container each (125 ml in volume), thus allowing only one culture to be studied at a time.

Selected references:

- Ruoxiang W, Xu J, Juliette L, Castilleja A, Love J, Sunga SY, Zhaua H, Goodwin TJ, Chung LWK. Three-dimensional co-culture models to study prostate cancer growth, progression, and metastasis to bone. Seminars in Cancer Biology 2005; (15):353-354.
- Goodwin TJ, Lundquist C, Tuxhorn J, Hurlbert K. The biotechnology facility for International Space Station. J Gravit Physiol 2004; 11(1):75-80.
- Jessup JM, Frantz M, Sonmez E, Locker J, Skena K, Waller H, Battle P, Nachman A, Weber MW, Thomas DA, Curbeam RL, Baker TL, Goodwin TJ. Microgravity Culture Reduces Apoptosis and Increases the Differentiation of a Human Colorectal Carcinoma Cell Line. In Vitro Cellular and Dev. Biol. 2000; 36(6):367-73.
- Kaysen JH, Campbell WC, Majewski RR, Goda FO, Navar GL, Goodwin TJ, Hammond TG. Select de novo gene and protein expression during renal epithelial cell culture in rotating wall vessels is shear stress dependent. J Membrane Biol 1999; 168(1):77-89.
- Freed LE, Langer R, Martin I, Pellis NR, Vunjak-Novakovic G. Tissue engineering of cartilage in space. Proc Natl Acad Sci USA, 1997; 94:13885-13890.

COMPUTATIONAL MODELING

Biomedical computational modeling is a multidisciplinary field that combines a multitude of applied and fundamental sciences including, but not limited to, mathematics, chemistry, physics, computer science, and engineering, to simulate physiological systems and their response to various perturbations, such as gravitational, atmospheric, biochemical, vehicle system anomalies or disease. By leveraging the various applied and fundamental sciences, it is possible to represent biological scales of atomic, molecular, molecular complexes; sub-cellular, cellular, multi-cell systems; tissue, organ, multi-organ systems; organism, population, and behavior. In addition to representing the different biological scales, it is also possible to include dynamic processes which span multiple time and length scales.

Given the multidisciplinary nature of computational modeling, partial gravity may be represented in several ways. Some examples include:

- Phenomenological mathematical equations that describe the physics, biochemical, cellular dynamics, and biomechanical responses of various physiological systems when gravity is altered (e.g. how the DAP Bone Physiology Model is developed)
- Statistical/mathematical regression curves (data driven) that describe how key systems respond under key gravitational conditions. These regressions may then be used to

interpolate or extrapolate to other gravitational conditions. They may also be integrated with mechanistic models to predict propagation effects to other physiologic systems.

The selected method will be highly dependent on the question to be answered, the system to be modeled, and the available knowledge and data about the system of interest.

As noted above, computational modeling can be applied in nearly all areas. However, for the most effective use of computational modeling, it is important to establish well-posed questions that will help to define the appropriate level of model complexity and credibility (verification and validation) needed to answer the question of interest with sufficient reliability.

Computational modeling has been used to analyze how the cardiovascular system responds when exposed to microgravity, HDT, HUT, lower body negative pressure (LBNP) and 1-g after spaceflight (see Orthostatic Intolerance evidence book). Limited work has also been done to model the impact of AG on the vestibular system. The DAP is currently conducting simulations with the DAP Bone Physiology Model to predict the response of cortical and trabecular bone to various types of gravitational levels and sources (e.g. spinning spacecraft and Martian gravity) (Figure 19).

Since computational modeling is done *in-silico*, it can be done anywhere the appropriate computational capability and software are available. Most often, the computational capability required consists of multi-core processor desktops or laptops available to most researchers. More advanced systems may be used for very rare and highly specialized models that require multiple temporal and spatial scale simulations. However, such complex simulations are generally done for areas where extensive work has already been done (e.g. heart biomechanics), or for high-fidelity cellular, biochemical, or molecular mechanisms (e.g. protein folding) simulations which cannot be directly measured.

Computational modeling represents a potent means of integrating the spaceflight knowledge base through application of appropriately complex analogies of biological, physiological, and physical systems. With the potential to highly influence space life science's findings and decisions comes a significant responsibility to verify, validate, and ensure the credibility of these models. This is a non-trivial pursuit that often requires tailored approaches suited to the modeling environment and available referent data. NASA achieves this by implementing a model credibility standard that seeks to ensure that the models meet a level of acceptable performance required to address the intended use. Other government agencies have recognized the benefit of the guidance this NASA standard provides and have also adopted it into their modeling and simulation practices.

Selected references:

- Stenger MB, Platts SH, Lee SMC, Westby CM, Phillips TR, Arzeno NM, Johnston S, Mulugeta L. Evidence Book: Risk of Orthostatic Intolerance During Re-exposure to Gravity, HRP-47072B, NASA Human Research Program, Houston, TX, 2015. Available at: http://humanresearchroadmap.nasa.gov/Evidence/reports/ORTHO.pdf

- Pennline J, Mulugeta L. (2014), "A Computational Model for Simulating Spaceflight Induced Bone Remodeling", 44th International Conference on Environmental Systems, ICES2014-083. Available at: http://ntrs.nasa.gov/archive/nasa/casi.ntrs.nasa.gov/20140013074.pdf
- Kassemi M, Oas JG, Deserranno D. Fluid-structural dynamics of ground-based and microgravity caloric tests. J Vestib Res. 2005; 15(2):93-107.
- Kassemi M, Deserranno D, Oas JG. Effect of gravity on the caloric stimulation of the inner ear. Ann N Y Acad Sci. 2004; 1027:360-70.
- Kassemi M, Deserrannob D, Oasc JG. Fluid-structural interactions in the inner ear. Computers & Structures, 83(2):181-189.
- Pace DK. Modeling and simulation verification and validation challenges. Johns Hopkins APL Technical Digest 2004; 25(2):163-172.
- Malinauskas RA, Anindita S, Murray IS. Working With the Food and Drug Administration's Center for Devices to Advance Regulatory Science and Medical Device Innovation. Artificial organs 2015; 39(4):293-299.
- NASA technical standards for models and simulations (NASA-STD-7009) https://standards.nasa.gov/documents/detail/3315599

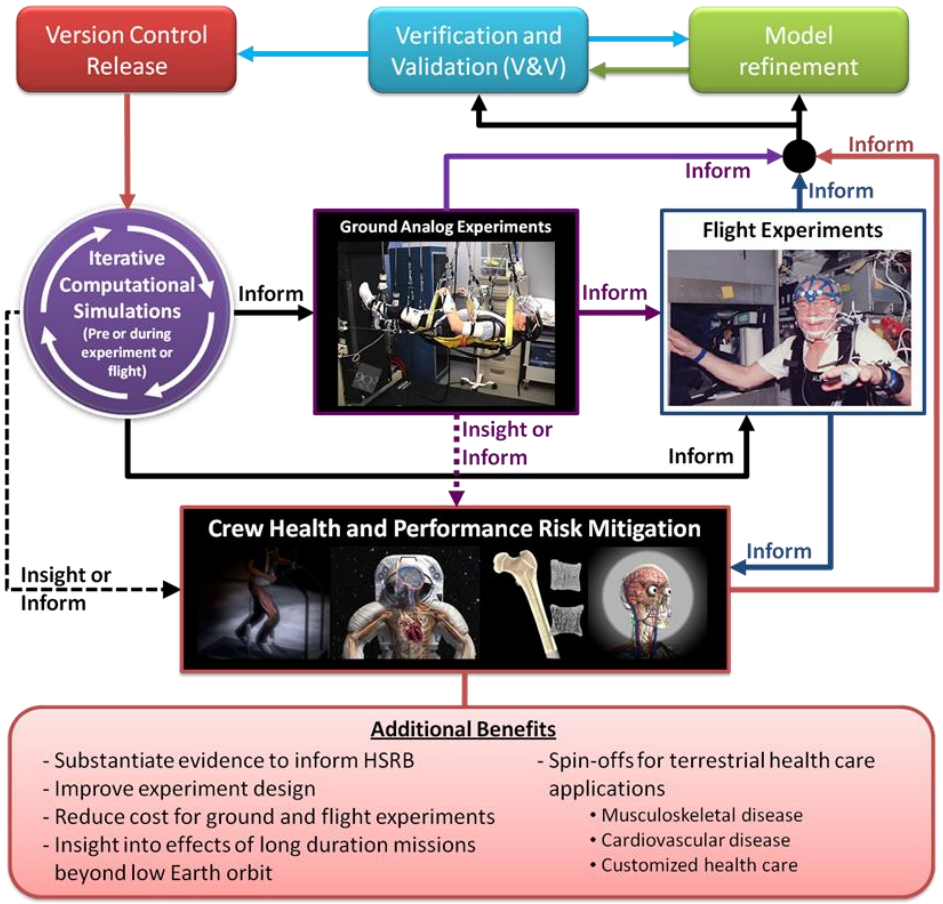

Figure 19. *Application of modeling and simulation to inform research and operations to enhance astronaut health and performance. Image courtesy of NASA's Digital Astronaut Project.*

ADDITIONAL SUGGESTIONS FOR ANALOGS

The partial gravity analogs in this section were suggestions discussed at the workshop and not included in the original list of analogs that were planned for discussion (the original list is shown in Table 2):

- Animal unloading (by hind limb suspension or other types of harness) – While there have been multiple studies using this analog for simulating microgravity, the model for simulating partial gravity is not yet finalized and still in work.

- Vertical treadmill – A treadmill oriented vertically, allowing a supine subject to "walk". Could be useful for the Exercise Discipline and has been used by some researchers. This could be integrated with centrifugation. However, exercise discipline scientists noted that the treadmill in itself is not a PGA, but is one of a wide variety of exercise hardware that could be used while using PGAs.

- In-flight harness for adding loads while using the treadmill, generating an equivalent to partial gravity.

- Combination of dry and wet immersion. Subjects could be dry immersed at various levels (seated or semi-recumbent) when relaxing and sleeping to simulate the partial-G effects of being in a habitat; and be exposed to graded wet immersion or, at times, to whole-body wet immersion with weighted garments, to simulate planetary surface explorations at partial-gravity (Figure 19).

- Free-fall wind turbine chamber – While a subject would still be exposed to 1 G, there would be unloading on the one hand, but wind shear on the other hand (inducing a 1-G effect).

- Combination of analogs to simulate an entire Mars mission: HDT to simulate the transit, HUT to simulate Martian gravity, followed by HDT to simulate the return flight. Such a study was conducted in the past, simulating a short-duration Moon mission lasting a total of 14 days, 6 days of which were in simulated 1/6 g (Pavy-Le Traon A, Allevard AM, Fortrat JO, Vasseur P, Gauquelin G, Guell A, Bes A, Gharib C. Cardiovascular and hormonal changes induced by a simulation of a lunar mission. Aviat Space Environ Med. 1997 Sep; 68(9):829-37). The study demonstrated the same changes typically seen with HDT bed rest and short-duration flight, namely post-exposure orthostatic intolerance, decreased plasma volume, and mild hormonal changes. Given that the study included only 6 subjects, simulated a short-duration lunar mission, and focused on a limited set of cardiovascular and hormonal parameters, extrapolation of the results to a 3-year Mars mission is not possible, and dedicated studies need to be conducted that more appropriately target a Mars mission. However, the concept of simulating an entire mission by use of alternating HDT and HUT is feasible and appears promising. Alternatively, one could conduct a study on ISS crewmembers upon their return to Earth, to study their adaptation to a simulated Martian gravity following the same 6-month exposure to 0 G as would be present on transit to Mars.

A partial dry/wet immersion analog was also suggested as indicated and described in Figure 20.

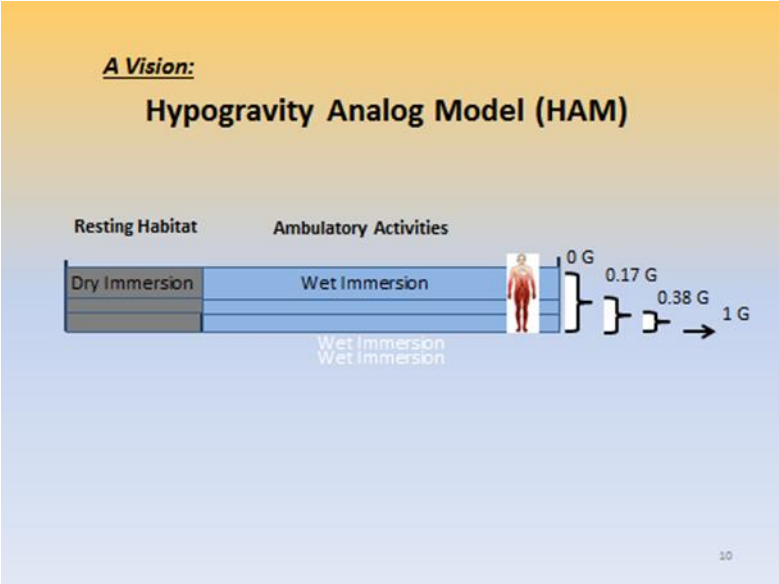

Figure 20. *A partial-G analog model to simulate effects of G-loads on the human body between 0 and 1. Dry immersion is used to simulate partial-G levels (immersion at various body levels depending on the simulated G-load) in a habitat, when subjects are physically relaxing in a seated or semi-recumbent posture, along with period of wet immersion in a larger pool, to simulate activities on a planetary surface at Gs between 0 and 1 (various water levels simulating Martian 0.38, Lunar 0.17 or weightlessness at 0 G). This model is notional and has never been used before.*

VI. MOST SUITABLE PARTIAL GRAVITY ANALOGS BY HUMAN HEALTH COUNTERMEASURES DISCIPLINE

The various discipline scientists within HHC provided inputs as to which of the partial gravity analogs would be most suitable to help address knowledge gaps in their areas of expertise. The scientists noted that the best analog for each discipline would depend on the particular research question being pursued. Different disciplines would likely need different models to address their concerns in an optimal way. The list of discussed hypo-G analogs are listed in Table 2 below.

Table 2. *List of hypo-G analogs discussed and evaluated by each HHC science discipline during the workshop.*

Hypogravity Martian/Lunar G-analogs

Ground based

Acute (s – hrs):

- Parabolic flights (Parabol)
- Head-up tilt (HUT)
- Head-out graded water immersion (Graded WI)
- Supine/head-down tilted centrifugation (Sup/HDTCent)
- Whole-body weighted garment water immersion (WeightedWI)
- Lower body positive pressure (LBPP)
- Overhead suspension (Overhead Susp)
- Rotating Wall Vessel (RWV) studies

Long term (days – months):

- Head-up bed rest (HUBR)
- Head-out graded dry immersion (Graded DI)
- Supine/HDT centrifugation in slow rotating room (Sup/HDTCent)

Space based

Acute (hrs):

- Short-radius centrifugation (ShortSpaceCent)

Long term (days – months):

- Short-radius animal centrifugation (AnimalSpaceCent)
- Long-radius centrifugation (LongSpaceCent)
- Rotating Wall Vessel (RWV) studies

Computational Modelling

The following summary is based on inputs received from HHC discipline leads. Tables 3 and 4 provide an overview of the usability scoring by each HHC discipline. An analog received a score of 0 if it was not applicable to the particular discipline, a score of 1 if it was deemed as being of low usability for that discipline, and a score of 2 or 3 if it was deemed of medium or high usability, respectively. A sum score for each analog was then calculated by adding the discipline scores, and the analogs were then ranked based on that sum score, with 1 being of the highest usability and applicability overall, and 13 being the lowest.

Table 3: *Expected partial gravity analog program usability by HHC discipline (ground-based analogs).*

Hypo-G: **Expected Low-G Analog Program Usability & Outcome per HHC Discipline**

(3 = High, 2= Medium, 1 = Low, 0 = None)

Analog/discipline	CV	VIIP	Ex	Bone	SM	Nutr	Pharm	IM	EVA	OSaD	Priority	Rank
Ground based:												
Acute (s – hrs)												
Parabol	3	2	1	0	2	0	0	0	2	2	**12**	9
HUT	3	0	0	0	0	0	0	0	0	1	**4**	14
Graded WI	3	1	0	0	2	0	1	1	1	1	**9**	11
Sup/HDTCent	3	2	1	0	3	0	0	1	0	1	**11**	10
WeightedWI	0	0	2	0	2	0	0	1	3	0	**8**	12
LBPP	3	3	1	0	2	0	0	0	0	0	**9**	11
Overhead Susp	0	0	2	0	2	0	0	0	3	0	**7**	13
Long term (days - mos)												
HUBR	3	1	2	2	3	1	2	0	0	1	**15**	6
Graded DI	3	0	2	2	3	1	1	0	0	1	**13**	8
Sup/HDTCent	3	3	2	2	3	2	2	2	0	2	**21**	4
RWV Studies	2	0	0	3	0	3	3	3	1	3	**18**	5

Table 4: *Expected partial gravity analog program usability by HHC discipline (flight-based analogs).*

Hypo-G: **Expected Low-G Analog Program Usability & Outcome per HHC Discipline**

(3 = High, 2 = Medium, 1 = Low, 0 = None)

Analog/discipline	CV	VIIP	Ex	Bone	SM	Nutr	Pharm	IM	EVA	OSaD	Priority	Rank
Space based:												
Acute (hrs)												
ShortSpaceCent	3	2	3	3	3	3	1	2	2	2	**24**	2
Long term (days – mos)												
AnimalSpaceCent	2	2	3	3	3	2	2	2	2	2	**23**	3
LongSpaceCent	3	3	3	3	3	3	3	3	3	3	**30**	1
RWV Studies	2	0	0	3	0	3	3	3	1	3	**18**	5
Comp Modelling												
	2	2	3	3	1	0	0	0	3	0	**14**	7

RATIONALE AND BACKGROUND FOR ANALOG SCORES (TABLES 2 & 3) BY EACH HUMAN HEALTH COUNTERMEASURES SCIENCE DISCIPLINE

Cardiovascular System

A few cardiovascular studies have previously used terrestrial analogs of partial gravity. For example, the Integrated Cardiovascular (ICV) study simulated Martian gravity by using HUT, but the exposure was brief (10-15 minutes), and longer exposures still need to be studied. Another limitation of previously conducted studies is the small number of subjects that were investigated, and larger studies with a larger "n" are needed.

In a 7-day HUT study, lower body compression garments were needed to create the same volume shift as were predicted to have occurred in lunar gravity, leading to the conclusion that the analogs may need adjustment before they can accurately simulate the required partial gravity level. The cardiovascular discipline had used the prediction provided by the Digital Astronaut computational model 6-7 years ago, and voiced concerns regarding the model's performance. However, the Digital Astronaut lead scientist noted that the model has vastly improved since that time.

Cardiovascular studies may benefit from many of the potential analogs. Terrestrially, parabolic flight, low degree HUT and head-up bed rest (HUBR), graded WI, supine/HDT centrifugation, LBPP, and graded dry immersion were all given a high usability score. RWV was given a medium usability score. Weighted suit WI and suspension studies were deemed as having no utility for cardiovascular investigations. Among the potential space-based analogs both short-radius and long-radius centrifugation were deemed highly usable, while animal centrifugation and RWV studies in space were deemed as medium in usability score. Computational modeling was scored as medium usability.

Visual Impairment Intracranial Pressure

Although some terrestrial analogs of microgravity have been able to recreate an increase in intracranial pressure, none of them, including 70 days of HDT bed rest, have been able to recreate Visual Impairment Intracranial Pressure (VIIP). HDT in combination with elevated CO_2 is being investigated as an enhanced model of spaceflight conditions. Finding a suitable terrestrial analog for partial gravity exposures may prove similarly challenging. Given that HDT is not a useful analog, it is unlikely that low degree of HUT will be a suitable analog, and hence it was scored as not applicable for short exposures. Weighted WI, graded dry immersion and overhead suspension are similarly not applicable, as in all three the subject is still exposed to normal hydrostatic gradients in the head and neck area. RWV cell studies are also not applicable to VIIP, which is investigated at the system level.

Very short exposures to partial gravity, such as during parabolic flight, might similarly be limited, given that VIIP occurs after long-duration spaceflight but was not prominent among short-duration crewmembers. Parabolic flight was scored as being of medium usability, but results should be interpreted with caution as evidence suggests that processes related to VIIP may take several months to fully manifest. Likewise, graded WI might be of limited utility and was scored as being of low usability, as it likely does not change blood flow to the brain, although CVP does

change in such immersion. The VIIP discipline scientist recommended lowering the score on long-term HUBR from medium to low.

Of particular utility for VIIP are analogs that produce cephalad fluid shifts, such as the LBPP (scored as high), thereby simulating the speculated key contributor to VIIP development. Centrifugation that produces head-to-foot fluid shift, therefore reducing intracranial pressure, might also be useful to evaluate as a potential countermeasure for VIIP. Centrifugation on the ground was scored as high for prolonged centrifugation and medium for shorter centrifuge exposures, and centrifugation in space was scored as medium for animal centrifugation and acute short-radius human centrifugation, and high for chronic long-radius centrifugation. Computational modeling was scored as medium usability.

Muscle and Exercise

For exercise studies, there is higher utility for space-based analogs, where all centrifugation analogs (short-radius, long-radius, and animal centrifugation) were scored as highly usable. Computational modeling was scored as high as well. RWV cell studies were not considered as applicable for both space and terrestrial use. Acute analogs of low degree HUT and graded WI were also scored as not applicable given their short duration. Acute analogs that were scored as being of medium usability include weighted WI and overhead suspension, while the acute analogs of supine or head-down centrifugation, LBPP, and parabolic flight were given low usability scores. Of note, parabolic flight has been previously used in the initial assessment of exercise hardware and operational volumes and may have other, yet unrealized uses with respect to exercise. Acute studies of exercise at varying G loads may be useful to inform computational models, assess biomechanics of movement, or assess the integration of exercise with other rapidly occurring physiological adjustments such as fluid shifts. Among the longer term analogs, low degree HUBR, graded dry immersion, and supine/HDT centrifugation were scored as medium. The discipline scientists noted that animal unloading to simulated lunar gravity (and Martian gravity) has been done by at least 2 research teams in the past, and the simulated lunar gravity was not found to prevent muscle atrophy.

Bone

The bone discipline scientist noted that in bone studies, animal experiments tend to have a big science return on investment because invasive tests are possible, whereas in human studies only noninvasive measures can be collected, limiting the scientific yield. Therefore, animal studies are strongly recommended. The bone discipline scientist noted that a Texas A&M animal study showed no protective effect for Martian gravity, and that bone loss is a function of the unloading. If doing human studies, it would be useful to get bone biopsies, but even then, only iliac crest biopsies would be possible, which is limited when we have a need to evaluate other regions as well.

The bone discipline ranked all the acute analogs as non-applicable to bone research, while all of the flight options for generating partial gravity were ranked as high. Computational modeling was ranked high as well. Among the terrestrial longer term analogs, RWV studies were ranked as high, while low degree HUBR, graded dry immersion, and supine or HDT centrifugation were given a medium usability score.

Sensorimotor

A sensorimotor discipline (SM) scientist noted that it is not truly possible to provide partial gravity on Earth, that it is a misnomer, since a 1 g environment is ever present on Earth. From a sensorimotor perspective, bed rest is an exclusionary model, in that on the one hand it maintains the integrity of the vestibular system but on the other hand it provides unloading of the proprioceptive system. The bed rest analog allows us to investigate the impact of body support unloading on performance in the absence of accompanying alterations in vestibular function associated with spaceflight.

At present there is no terrestrial analog that simulates the effects of partial gravity on both the vestibular system and the proprioceptive system. It would be hard to find a single spaceflight analog that would recapitulate all aspects of sensorimotor changes seen in orbit. We need to integrate both bed rest and other ground-based analogs with flight studies to gain the benefits of both research approaches.

Among the suggested partial gravity analogs, the discipline ranked high those analogs that provide the capability for physiological studies. Cell-based studies, such as RWV cell studies, were deemed as non-applicable, as was short-term low degree HUT. LBPP was considered a useful analog to investigate adaptive changes in locomotor patterns associated with unloading of the lower limbs with LBPP. Computational modeling was given a low usability score. Parabolic flight, graded WI, and overhead suspension were scored as medium among the short-term analogs (previous studies showed that with body suspension there were effects on locomotion), while short-term supine or HDT centrifugation and weighted WI were scored as highly usable. Also scored as highly usable were the long-term analogs (low degree HU bed rest, graded dry immersion, supine or HDT centrifugation) as well as the flight-based analogs such as short-radius animal or human centrifugation, and long-radius centrifugation.

Another potential sensorimotor analog, which was not discussed at length at the workshop, is galvanic vestibular stimulation (GVS), which involves application of a low-level electrical stimulation to the mastoid, eliciting an acute perturbation of the vestibular system. Simulating the effects of partial gravity might be possible, but responses are very individualized, and different people respond differently to the same stimulus, so there would not be one level of GVS that would work for all subjects.

Nutrition

One of the main questions under investigation by the nutrition discipline is how do nutritional requirements change with exposure to altered gravity environments and how do these nutritional requirements interact with the various physiological systems and the changes they undergo. Because nutrition-based studies can be very diverse, it is not possible at this time to define which partial gravity analog would be the most suitable to support nutrition-based studies.

The acute-exposure ground-based analogs are of insufficient duration for nutrition studies and therefore received a score of zero (i.e. not applicable). The long-term ground-based studies have more utility, with low degree HUBR and graded dry immersion being scored as low, supine/HDT centrifugation being scored as medium, and RWV being scored as high.

With regard to space-based partial gravity analogs: acute human short-radius centrifugation, long-term long-radius centrifugation, and in-flight RWV were all scored as high, while animal centrifugation was scored as medium. Computational modeling was not felt to be an applicable analog for nutrition studies.

Pharmacology

For pharmacological studies, given that HDT bed rest is not an adequate model for microgravity, it is highly likely that terrestrial analogs will not be adequate models of actual partial gravity. The pharmacology discipline scientist indicated that it would be better to invest in flight studies where the results would be unequivocal. Of the terrestrial partial gravity analogs, most were deemed non-applicable to pharmacology investigations, including parabolic flight, low degree HUT, supine/HDT centrifugation, weighted WI, LBPP, and overhead suspension. Graded WI was scored a low usability analog. The longer term terrestrial analogs were deemed more relevant, with graded dry immersion scored as low, low degree HUBR and supine/HDT centrifugation scored as medium, and RWV studies scored as highly usable.

Of the space-based analogs, acute short-radius centrifugation was scored as low, long-term animal centrifugation was scored as medium, and long-radius centrifugation and RWV studies were scored as high. Computational modeling was also scored as non-applicable.

Immune

Multiple factors that are associated with spaceflight can affect immunity in-flight, and it is hard to separate the contribution of each factor to the changes observed. Partial g analogs that the immune discipline would prioritize include the RWV (both terrestrially and in space), and other in-flight centrifuge-based cellular studies. WI analogs such as NEEMO are good in reproducing perceived risk and stress, but neutral buoyancy in itself is not a microgravity analog. The discipline categorized most of the acute terrestrial analogs as non-applicable, including parabolic flight, low degree HUT, LBPP, and overhead suspension. Acute graded WI, supine/HDT centrifugation, and weighted WI were scored as low. Of the longer term terrestrial analogs, low degree HUBR and graded dry immersion were categorized as non-applicable, supine/HDT centrifugation was scored as medium and RWV was scored as high. Of the space-based analogs, acute short-radius centrifugation was scored as medium, as was long-term animal centrifugation. Long-radius centrifugation and RWV studies were scored as high. Computational modeling was also scored as non-applicable.

Extravehicular Activity

One of the questions the EVA discipline is trying to answer is how soon after landing on Mars can crewmembers conduct a safe and successful EVA. Because using an EVA suit is a complex, physically demanding, and sensorimotor-challenging scenario, it is best to use crewmembers in such studies, since using lay volunteers that have no suit experience may not be a full analog. Using ISS crewmembers upon return is one possibility that was discussed. Alternatively, test subjects with space suit experience may be used, not necessarily in bed rest, but possibly with an induced physiological model of expected spaceflight deconditioning. For an EVA scenario on a planetary surface to be fully simulated, several physiological systems need to be simultaneously challenged: fluid shifts/dehydration, weakened muscles, lower aerobic capability,

and acute sensorimotor dysfunction. A SM scientist noted that reversing prisms and galvanic stimulation can be used to provide the sensorimotor component. By varying the strength and fitness of the subjects, in combination with sensorimotor and cardiovascular challenges, we may be able to reasonably model the astronauts' physiological characteristics upon a Mars landing. Another possibility is to simulate the energy cost of locomotion in partial gravity by creating sensorimotor challenges, for example with a treadmill that undulates, along with moving scenes, and evaluate the energetic cost. The cost increases when a new environment is encountered, and decreases back down as subjects adapt. There are other manipulations that the SM could offer that would help inform suit testing.

How similar such analogs would be to getting out of a spacecraft and doing an EVA on Mars shortly after landing is unknown.

With those facts in mind, the EVA discipline scored the various potential partial g analog as follows: Of the acute terrestrial analogs, low degree HUT, supine/HDT centrifugation, and LBPP were deemed as non-applicable. Graded WI was categorized as a low usability analog, parabolic flight as a medium, and weighted WI and overhead suspension as high. Of the longer term terrestrial analogs, RWV studies were score as low, but all other analogs (low degree HUBR, graded dry immersion, and supine/HDT centrifugation) were categorized as non-applicable.

Of the space-based analogs, long-radius centrifugation was scored as high, acute short-radius centrifugation and long-term animal centrifugation were scored as medium, and RWV studies were scored as low. Computational modeling was scored as high.

Oxidative Stress and Damage Discipline

The Oxidative Stress and Damage Discipline (OSaD) discipline scientist noted that RWV studies would be very useful, both acute and long-term, terrestrially and in space. For that reason the RWV studies (both ground-based and in spaceflight) were scored as high.

Of the acute terrestrial analogs, parabolic flight was the most useful to the OSaD discipline, and was given a medium usability score. Low degree HUT, graded WI, and supine/HDT centrifugation were scored as low usability, and weighted WI, LBPP, and overhead suspension were deemed as non-applicable. Of the longer term terrestrial analogs, low degree HUBR and graded dry immersion were scored as low, and supine/HDT centrifugation) was categorized as medium.

Of the space-based analogs, RWV and long-radius centrifugation was scored as high, while acute short-radius centrifugation and long-term animal centrifugation were scored as medium. Computational modeling was categorized as non-applicable.

Analog validation concerns

Of note, a discussion ensued regarding the lack of validation of these models for some of the physiological systems that are to be tested in these analogs. For example, there is discrepancy between data collected in pharmacologic studies done in HDT bed rest analogs and flight data, raising the possibility that bed rest is not a suitable analog for pharmacologic studies. For other physiological systems, such as cardiovascular, muscle, and bone, changes seen in bed rest mimic those seen during spaceflight, but the magnitudes of these changes are different.

Proper validation of PGAs for particular physiological systems will increase our confidence that the resulting data likely represent changes that we would expect to see with exposure to partial gravity during space missions. Complete validation can only be performed on the surface of the Moon or Mars, because partial gravity using centrifugation in space generates Coriolis forces that are much larger than on the Moon or Mars.

In addition, validation criteria might be different for each scientific discipline and for each physiological system. Interestingly, bed rest has not been validated as a model for microgravity either. For a complete validation, the same subjects (astronauts) should be tested during bed rest and 1-2 years later during spaceflight, and the results compared.

On the other hand, lack of validation doesn't necessarily mean that we shouldn't use a model. For some physiological systems, actual flight data from partial gravity exposure (from Apollo missions) is minimal or lacking, and it may not be possible to consider an analog as validated when there is no spaceflight database to validate against. A scientist noted that in some cases not only are we lacking partial gravity spaceflight data, but we don't even have microgravity data, making it even more challenging to extrapolate from ground-based models to partial gravity. Another scientist commented that an analog does not need to mimic the partial gravity environment but only to elicit similar physiological changes. Each analog would provide only pieces of the larger and more complex partial gravity environment.

VII. SCORES AND PRIORITY FOR PARTIAL GRAVITY ANALOGS – COMBINED

The final priority scores and priority ranks were generated by adding all of the usability scores provided to each analog by each discipline. The combined priority scores ranged from 4 (least usable) to 30 (most usable). The highest rated (most usable) analog was the space-based long-radius centrifugation as all disciplines felt that this would be the most accurate simulation of planetary surface partial gravity. The lowest ranked (least usable analog) was the acute low degree HUT given its short duration and limited physiological impact on most systems. Also highly usable are: short-radius human and animal flight centrifuges, long-term terrestrial supine/HDT centrifugation, and RWV (both terrestrial and space-based).

In general, the acute exposures were deemed as less valuable by all the disciplines.

Many questions remain to be answered regarding the next steps and the forward path.

The following are given as examples, and are not intended to be a comprehensive list of those questions:

1) Should NASA invest in an analog that is applicable, but not ideal, for many of the disciplines or would a better approach be to fully simulate what only one discipline needs?
2) How feasible are the proposed analogs, and what is their availability?
3) What is the cost-benefit analysis of each proposed analog?

None of the analogs are going to be perfect. Each gives only an aspect of what is needed to fully simulate a true partial gravity environment. While ground-based analogs are easier to implement than flight analogs and would be more feasible and cost-effective, the consensus of the HHC element is that actual flight studies would be preferred as they would provide more valuable information. The HHC element therefore recommends to prioritize flight analogs above ground-based ones.

VIII. INPUTS FROM THE OTHER HUMAN RESEARCH PROGRAM ELEMENTS

Space Human Factors and Habitability – Space human factors engineering has already made extensive use of parabolic flights as a microgravity analog during the design of the ISS. Centrifuge studies were also conducted at Ames and Langley Research Center, given that much work was done on user interface aspects, human-computer interaction, and dynamic aspects of how people move or utilize space. Evaluation of hardware, not just evaluation of the human in the loop, is also an aspect that may require partial gravity work. The Space Human Factors and Habitability (SHFH) element scientist noted that many potential synergies can be realized in the use of partial gravity analogs, similar to the already established cooperation that exists between environmental health and food and HHC disciplines. The engineering aspects of SHFH also align with HHC disciplines; for example, habitat design aligns with EVA, and occupant protection aligns with bone.

More specifically, for the Occupant Protection discipline, which was formerly under HHC and transitioned only recently to the SHFH element, the following usability scores were provided for the potential analogs discussed:

- All of the ground-based analogs were deemed as non-applicable, as was the space-based RWV. Of the space-based analogs, long-radius centrifugation was ranked as highly usable, the short-radius human centrifuge as medium, and the animal centrifuge was ranked as low.

- Computational modeling was scored as highly usable.

Radiation element – There is overlap between some of the gaps that are under the purview of the radiation element and those that are under HHC. However, the radiation element is concentrating at this time on cell and animal studies, and are not soliciting yet for physiological studies or studies that incorporate partial gravity. Collaborations in partial gravity analogs may be pursued in the future.

Behavioral Health & Performance – The Behavioral Health & Performance (BHP) element scientist noted that while BHP is not yet planning partial gravity work, there are BHP aspects that need to be taken into account in such analogs, including hormonal changes, the effects of stress, changes to circadian rhythm, sleep physiology, cognitive function, and behavior.

Exploration Medical Capability – The Exploration Medical Capability (ExMC) element had no comments.

IX. CONCLUSIONS

The experimental conditions that were deemed the most interesting by the HHC element lead scientists are those permitting studies of the long-term effects of exposure to (a) chronic rotation when supine or in head-down tilt (ground-based); and (b) long-radius centrifugation (space-based). It is interesting to note that chronic ground-based slow rotation room studies have not been performed since the 1960s, when the USA and USSR were investigating the potential use of AG for long-duration space missions. On the other hand, the other partial gravity analogs, i.e. parabolic flight, HUT, suspension, and short-radius centrifugation, have been regularly used in the last three decades (see review in Clément et al. 2015).

Based on the workshop evaluations and the scores by the HHC scientific disciplines indicated in Tables 3 and 4, simulation of partial G between 0 and 1 should be prioritized as follows:

Priority 1. Chronic space-based partial-G analogs:

a. **Chronic space-based long-radius centrifugation.** The ideal scenario would be chronic long-radius centrifugation of cells, animals, and humans in a translational research approach – ideally beyond low Earth orbit under deep space environmental effects and at various rotations – to obtain different G effects. In this scenario, all physiological systems could be evaluated and the relationship between physiological response and G level established. This would be the most integrative way of defining, for the first time ever, G thresholds for each physiological system.
b. **Chronic space-based centrifugation of animals.** Chronic centrifugation of rodents at various G levels in space would allow for determination of AG thresholds of protection for each physiological system. In this case, all physiological systems will be of interest. Intermittent centrifugation will be of secondary interest.
c. **Chronic space-based centrifugation of cell cultures (RWV).** Bioreactor studies of cells and cell cultures of various tissues at various G levels would allow for intracellular investigations of the effects of partial-G.

Priority 2. Acute, intermittent space-based partial-G analogs:

a. **Acute, intermittent space-based short-radius human centrifugation.** Intermittent centrifugation of humans would allow determination of thresholds of AG for protection of astronaut health in space.

Priority 3. Chronic ground-based partial-G analogs:

a. Chronic centrifugation of supine or head-down tilted humans.
b. Chronic head-up tilt in humans.
c. Chronic head-out graded dry immersion in humans.
d. Chronic partial suspension of rodents
e. Chronic rotating bioreactor cell culture studies (RWV)

Priority 4. Acute ground-based partial-G analogs:

a. Parabolic flights. Very acute and short-term effects of G levels between 0 and 1 in humans for fast responding systems such as cardiovascular and sensorimotor as well as for acute responses in cell cultures and animals.
b. Other acute models as indicated in Table 3.

X. RECOMMENDATIONS

Because human centrifuges in space will not be available in the near future, the Partial-G Workshop's recommendation (based on the priorities indicated in the previous section) is to implement the following new partial-G analogs for AG-research between the present time and 2022:

Space-based:

- Chronic centrifugation of rodents.
- Chronic centrifugation of cells and cell cultures (RWV, in-flight bioreactor).

Ground-based:

- Chronic rotating rooms with bed rested (horizontal or head-down 6°) human test subjects (rotation rate – whether slow or fast – to be determined based on experimental needs).
- Chronic head-up tilt in humans, at various angles.
- Chronic graded head-out dry immersion in humans. This model could be combined with graded wet immersion in a large pool (Figure 19) to simulate exploration on a planetary surface with partial-gravity (Martian 0.38 or Lunar 0.17 G).
- Partial suspension of animals (rodents).
- Chronic bioreactor simulations in cells and cell cultures.
- Acute low G levels by parabolic flights in humans.

It should be possible to implement the above suggestions within a short time frame, although some validation and testing are still required before research can be initiated.

REPORT DOCUMENTATION PAGE

Form Approved
OMB No. 0704-0188

Public reporting burden for this collection of information is estimated to average 1 hour per response, including the time for reviewing instructions, searching existing data sources, gathering and maintaining the data needed, and completing and reviewing the collection of information. Send comments regarding this burden estimate or any other aspect of this collection of information, including suggestions for reducing this burden, to Washington Headquarters Services, Directorate for Information Operations and Reports, 1215 Jefferson Davis Highway, Suite 1204, Arlington, VA 22202-4302, and to the Office of Management and Budget, Paperwork Reduction Project (0704-0188), Washington, DC 20503.

1. AGENCY USE ONLY *(Leave Blank)*	2. REPORT DATE	3. REPORT TYPE AND DATES COVERED
	July 2016	Technical Memorandum

4. TITLE AND SUBTITLE
Human Health Countermeasures – Partial-Gravity Analogs Workshop

5. FUNDING NUMBERS

6. AUTHOR(S)
Yael Barr; Gilles Clément; Peter Norsk

7. PERFORMING ORGANIZATION NAME(S) AND ADDRESS(ES)

Lyndon B. Johnson Space Center
Houston, Texas 77058

8. PERFORMING ORGANIZATION REPORT NUMBERS
S-1223

9. SPONSORING/MONITORING AGENCY NAME(S) AND ADDRESS(ES)

National Aeronautics and Space Administration
Washington, DC 20546-0001

10. SPONSORING/MONITORING AGENCY REPORT NUMBER
TM-2016-218605

11. SUPPLEMENTARY NOTES

12a. DISTRIBUTION/AVAILABILITY STATEMENT

Unclassified/Unlimited
Available from the NASA Center for AeroSpace Information (CASI)
7115 Standard
Hanover, MD 21076-1320 Category: 52

12b. DISTRIBUTION CODE

13. ABSTRACT *(Maximum 200 words)*

The Human Health Countermeasures (HHC) Element within the National Aeronautics and Space Administration (NASA) Human Research Program (HRP) convened a half-day workshop in February 2015 focusing on potential analogs that can simulate exposure to partial gravity (also known as hypogravity, equal to a G level between 0 and 1). Partial-gravity environments may be found on planetary surfaces such as the Moon and Mars, and in spacecraft using artificial gravity. Analogs that simulate effects of such partial gravity would allow researchers to determine what level of partial gravity is the most effective to mitigate the negative physiological effects of weightlessness, or if additional countermeasures are required. To that end, scientists and managers from the different HHC disciplines and HRP elements were invited to provide inputs and discuss the utility of the different potential partial-gravity analogs. This paper is a summary of these discussions.

14. SUBJECT TERMS	15. NUMBER OF PAGES	16. PRICE CODE
hypogravity, artificial gravity, analogs, physiological responses, weightlessness simulation	52	

17. SECURITY CLASSIFICATION OF REPORT	18. SECURITY CLASSIFICATION OF THIS PAGE	19. SECURITY CLASSIFICATION OF ABSTRACT	20. LIMITATION OF ABSTRACT
Unclassified	Unclassified	Unclassified	Unlimited