Technical Paper 3650

Age Life Evaluation of Space Shuttle Crew Escape System Pyrotechnic Components Loaded With Hexanitrostilbene (HNS)

William C. Hoffman III

NOTICE
This document contains information that has been restricted to U.S. government agencies and U.S. government contractors only.

September 1996

Technical Paper 3650

Age Life Evaluation of Space Shuttle Crew Escape System Pyrotechnic Components Loaded With Hexanitrostilbene (HNS)

William C. Hoffman III
Lyndon B. Johnson Space Center

September 1996

Acknowledgments

The performance of this test program required diligence and substantial efforts on the part of many personnel. Special thanks are owed to Mr. Rick Dean, Mr. Scott Hacker, Mr. Todd Hinkel, Mr. Doug Harrington, and Mrs. Maureen Dutton, all of whom work in the Energy Systems Test Area, Johnson Space Center. I also wish to thank Dr. J. Scott Deiter of the Naval Surface Warfare Center, Indian Head, Maryland, for the performance of the chemical analysis on the samples provided by the Johnson Space Center. The efforts of Ms. Karen Williams of OEA Aerospace Inc., in obtaining archival records for hardware used in this test program are also appreciated.

Contents

Section		Page
1.0	Introduction	1
1.1	Literature Search	1
1.2	Analytical Techniques for Age Life Limit Assessment	7
2.0	Test Program Description	11
2.1	Test Hardware	11
2.2	Test Procedure	19
2.3	Test Results	20
2.3.1	Destructive Test Firing Results	20
2.3.2	Chemical Analysis Results	20
3.0	Discussion and Analysis of Results	23
3.1	Linear Regression Analysis of Data	23
3.2	Worst-Case Predictions of Performance	27
4.0	Conclusions	27
5.0	Bibliography	28
Appendixes		
A	FCDC Lot WAG Detonation Velocity Test Results	A-1
B	6-Grains/ft MDF Lot 146441 Detonation Velocity Test Results	B-1
C	8-Grains/ft MDF Lot 69148102 Detonation Velocity Test Results	C-1
D	20-Grains/ft LSC Lot 68573012 Detonation Velocity Test Results	D-1
Tables		
1	Estimated Life As Related To 28-Day Test Temperature	2
2	Hardware, Age, and Lot Descriptions Used in HNS Degradation Study	12
3	High-Temperature Exposure Test Matrix	19
4	HPLC Analysis Results for Explosive Components Subjected to Environmental Exposure	23
Figures		
1	Overhead window crew escape system overview.	13
2	Overhead window crew escape system explosive train schematic	14
3	Side hatch crew escape system overview.	15
4	Side hatch crew escape system explosive train schematic	16
5	Cross section of an FCDC end fitting	17
6	Cross section of an SMDC end fitting	17
7	Mild detonating fuse (MDF).	18
8	Linear shaped charge (LSC).	18
9	Expanding tube assembly (XTA).	19
10	FCDC lot WAG detonation velocity measurements versus time and temperature	21
11	6-grains/ft MDF detonation velocity versus time and temperature	22
12	8-grains/ft MDF detonation velocity versus time and temperature	22
13	20-grains/ft LSC detonation velocity versus time and temperature	23

Acronyms

ANOVA	analysis of variance
DLAT	destructive lot acceptance test
FCDC	flexible confined detonating cord
HNS	hexanitrostilbene
HPLC	high-performance liquid chromatography
LSC	linear shaped charge
MDF	mild detonating fuse
SMDC	shielded mild detonating cord
TBI	through-bulkhead initiators
XTA	expanding tube assembly
OV	Orbiter Vehicle

1.0 Introduction

The objective of the accelerated age life test program was to establish the deterioration characteristics of crew escape system pyrotechnic components loaded with hexanitrostilbene (HNS)—such as shielded mild detonating cord (SMDC), flexible confined detonating cord (FCDC), linear shaped charge (LSC), mild detonating fuse (MDF), and through-bulkhead initiators (TBIs)—when exposed to elevated temperatures for prolonged periods of time. Using the accelerated age test results coupled with observed performance on hardware removed from flight vehicles and ground storage, we can make estimates of useful life for hardware in the field. The principal elements of this study consist of components loaded with the explosive HNS-I and HNS-II. Specifically, 6-grains/foot silver-sheathed MDF, 8-grains/foot silver-sheathed MDF, 20-grains/foot aluminum-sheathed LSC, 18.52-grains/foot aluminum-sheathed MDF, and 2.5-grains/foot lead-sheathed FCDC were included in this test program. The FCDC, 18.52-grains/foot MDF, and 20-grains/foot LSC are the three components currently being used on the Space Shuttle, but the results from all the hardware are, in general, applicable to the Space Shuttle hardware loaded with HNS. Determination of service life limits is dependent upon the test results and the application environments unique to installations within the Shuttle. The test program was complemented by a literature search for age life studies of similar hardware conducted by NASA and other government organizations.

1.1 Literature Search

A literature search of pyrotechnic component age life extension test methods and results was performed and the articles and specifications provided various means of assessing the useful life of pyrotechnic hardware.

The military specification MIL-STD-1576 dated July 1984,[1] provides requirements for performing an accelerated age life test on pyrotechnic devices. Table IV, EED Accelerated Aging Test, in MIL-STD-1576 describes the test methodology for proving the hardware has a 3-year service life. The testing requires that 10 units be subjected to the following, in the order shown:

1. non-destructive tests
2. storage at +160°F for 30 days
3. shock
4. vibration
5. x-radiography
6. n-radiography
7. bridgewire resistance measurement
8. insulation resistance
9. leak test
10. no-fire verification
11. destructive firing

Successful completion of the testing allows a 3-year service life to be assigned to the hardware with an indefinite number of extensions allowed on 3-year intervals. The technical basis for assigning and/or extending the pyrotechnic device service life for 3 years is described in a paper by Moses,[2] which presents the hypothesis that ambient temperature degradation of explosive materials can be accelerated through exposure to elevated temperature. An Arrhenius rate equation is used to describe the chemical reactions within the pyrotechnic device explosive. The Arrhenius equation is used to describe numerous chemical reactions and has the form

$$k=A*\exp(-E/R*T) \qquad (1)$$

which allows the computation of the reaction rate, k, units (1/time), of a chemical process, where

A = frequency factor (1/time)

E = activation energy (kcal/mole)

R = universal gas constant (liter-atmospheres/ K/mole)

T = absolute temperature.

As related to the age life extension, Moses[2] recommended a minimum of 13 samples be subjected to a given set of time-temperature combinations. Data developed during destructive firings were to be compared with previous firing data for the samples under study. Extrapolation of a useful life using equation (1) according to Moses[2] requires an estimate of the average expected storage or use temperature of the hardware along with the assumption that the chemical reaction rate doubles for every 10°C increase in temperature. Table 1[2] presents predicted life versus accelerated-age test parameters and is presented below for clarity of discussion. It should be remembered that Table 1 was generated using the above assumptions regarding reaction rate. The confidence levels for each prediction are shown.

Table 1*
Estimated Life As Related To 28-Day Test Temperature

	70°F Avg. Storage Temperature	**70°F Avg. Storage Temperature**	**90°F Avg. Storage Temperature**	**90°F Avg. Storage Temperature**
28-Day Test Temperature	**90% Confidence**	**80% Confidence**	**90% Confidence**	**80% Confidence**
130°F	18,100 Hr	22,800 Hr	6,050 Hr	7,100 Hr
140°F	31,600 Hr	41,600 Hr	11,300 Hr	12,800 Hr
150°F	54,400 Hr	75,300 Hr	18,100 Hr	22,800 Hr
160°F	94,000 Hr	134,000 Hr	31,600 Hr	41,600 Hr
170°F	163,000 Hr	242,000 Hr	54,400 Hr	75,000 Hr

*Ref. 2, page 7

Since one year is equivalent to 8,760 hours, conditioning a material at a temperature of 160°F for 28 days is equivalent to over 10 years of life when stored at 70°F. The life is reduced to 4 to 5 years when the expected storage temperature is 90°F.

According to Moses[2], assigning a 3-year service life extension based upon successful completion of a 30-day, 160°F exposure of pyrotechnic devices is conservative. Table 1 shows that a 90°F storage environment would allow for a 4- to 5-year service life extension. Limiting the service life extension to 3 years increases the prediction confidence and is thus conservative with respect to the data in Table 1.

NSTS 08060 Revision H, "Space Shuttle System Pyrotechnic Specification," describes the requirements for design life verification which entails subjecting 5 samples from a lot to environments and destructive tests 4 and 7 years from the subject lot's destructive lot acceptance test.[3] Data developed during the tests are examined and compared with previously developed data for evidence of performance deterioration. Once the 10-year design life is reached, annual tests of 5 units from the lot are required until insufficient hardware remains for test or evidence of degradation is observed. The Space Shuttle specification allows the applicable design organization to determine the extent of environmental conditioning a component is subjected to during age life extension test. A lot of explosive devices contains the same lot of explosive and raw materials and is made using the same manufacturing processes throughout production of the lot.

Navy air crew escape system component testing has been documented in numerous reports generated by the Naval Ordnance Station, Indian Head, Maryland. The Navy assigned a useful and service life of 12 and 8 years, respectively, to SMDC lines installed in an AH-1J Helicopter Window Cutting Assembly system.[4] A total of 91 SMDC lines were tested as reported in reference 4, and the majority of SMDC lines had a total age of approximately 99 months and an installed duration of approximately 49 months. Aging trends for the SMDC lines were computed for total age while installed time trends were not computed due to insufficient data. The SMDC lines contained HNS but the sheath material was not identified in the report.

The Navy performed an assessment of age-related deterioration of silver-sheathed-HNS FCDC used in the Air Force A-7K aircraft[5] with the resulting recommendation that the useful and service life be limited to 5 and 3 years, respectively. Total age and installed times for the 15 FCDCs used in the testing were approximately 35 and 24 months, respectively. Ballistic data were acceptable, although one FCDC had a hairline crack in the sheath which was believed to extend into the explosive core. The Air Force data were limited both in quantity of samples and installed and total age of the components. Combining data from earlier tests performed on similar lines removed from a Navy version of the A-7K aircraft, more meaningful useful and service life assessments were performed. The Navy noted failures to detonate along the entire cord during the earlier tests. Based upon the 6 failures to propagate detonation along the entire FCDC with total age and installed times of 52 months and 37 to 42 months, respectively, the total and service life limits were recommended to remain at 60 and 36 months, respectively. The report conclusion postulated that a contributor to the installed life limit in the A-7K aircraft FCDC was the number of bending cycles experienced during canopy opening/closing. The report recommended that consideration be given to counting the number of open/close cycles for the canopies as part of the FCDC service life surveillance.

Evaluation of the service and total life limits of the Harpoon Missile lead-sheathed-HNS FCDC and silver-sheathed-HNS SMDC in C. A. Pfleegor's, "Surveillance: Navy Fleet-Returned Harpoon Missile Capsule Detonator, SMDC, and FCDC"[6] resulted in an assignment of a total service life of 7½ years for both components. A total of 23 SMDCs and 9 FCDCs were tested with total ages of 54 to 60 months and 57 to 64 months, respectively. The SMDC tests resulted in one detonation velocity measurement of

5,940 meters/second versus the specification minimum of 6,000 meters/second. A calculated estimate of the lower expected detonation velocity of SMDC hardware in the fleet was 5,769 meters/second. Although no detonation velocities below the specification limit were measured in test for the FCDC, the lowest expected detonation velocity for hardware in the fleet was predicted to be 5,575 meters/second. No trending of the SMDC or FCDC data was possible as acceptance test data for both hardware sets were unavailable, but the general acceptable performance of the FCDC and SMDC in the tests justified establishment of the 7½-year service life. This service life assignment was accompanied by the recommendation to perform tests on hardware removed after service life expiration to verify adequacy of the life limit.

The Navy performed an evaluation of the service life of S-3 canopy/hatch severance systems as discussed in C.M. Nugent's, "Service Life Evaluation Program (SLEP) for S-3 Aircraft Canopy/Hatch Severance System Explosive Actuated Devices, Phases III and IV," which involved testing hardware in the as-received condition and also following accelerated aging.[7] Accelerated aging of the SMDC and FCDC consisted of subjecting samples to temperature and humidity cycling, shock, and vibration environments in accordance with MIL-D-21625D. The sample ages were

	Total Life	*Installed Life*
SMDC	80-131 months	32-72 months
FCDC	76-100 months	32-72 months

Temperature extremes in the temperature cycling were from -65°F to +160°F, with additional storage time at -80°F. Total time at -80°F was 134 hours; total time at -65°F was 54 hours; and total time at +160°F was 384 hours. SMDC and FCDC samples underwent visual inspection; radiographic inspection; ballistic testing; and chemical analysis. The chemical analysis performed consisted of high-performance liquid chromatography (HPLC) and differential scanning calorimetry. The combined tests resulted in the following life assignments:

	Total-Life Limit	*Service-Life Limit*
silver-sheathed HNS SMDC*	10 years	8 years
lead-sheathed HNS FCDC	9 years	6 years

*SMDC samples used in the testing[7] had not reached the established total and service life limits of 10 and 8 years, so the limits were not extended.

Ballistic test results[7] indicated the SMDC mean detonation velocity total aging trend would exceed the maximum 7,000 meters/second limit at 140 and 170 months for -65°F and +200°F firing temperatures, respectively. No trends were computed for the FCDC due to the limited data available for analysis. Upper tolerance limit trends for detonation velocity exceeded the specification allowable at 80 months total age at -65°F and independent of age at +200°F. Installed time trends for detonation velocity had a negative slope with the lower tolerance limit falling below the specification allowable at 80 months when conditioned to -65°F. The detonation velocity lower tolerance limit fell below the lower specification allowable at

70 months installed time when conditioned to +200°F. Chemical analysis results[7] did not provide conclusive evidence of explosive degradation.

B. M. Carr ("Service Life Evaluation Program (SLEP) for F-14A Aircraft Canopy Jettisoning and Ejection Seat Ballistic Sequencing System Explosive-Actuated Devices (Test Phases III and IV)" performed an analysis of the age life of F-14A aircraft ejection seat and canopy jettisoning pyrotechnic components through the retrieval of installed ordnance from fleet aircraft and subsequent testing in both as-received as well as accelerated aged conditions.[8] According to Carr, a one-year extension in service life for the F-14A escape system components was planned on the basis of retrieving 10 shipsets of hardware: five to be tested as-received and five to be tested in an accelerated aged state. Age and service life limits would continue to be extended until a practical limit was established. The result of the testing described in reference 8 was a recommendation for a 16-year total and 8-year installed life for the silver-sheathed-HNS SMDC and a 10-year total and 5-year installed life for the lead-sheathed-HNS FCDC. Accelerated aging consisted of subjecting the items to 28 days of temperature and humidity cycling per MIL-D-21625E, high-altitude exposure per MIL-D-21625E, vibration, and 20-g shock. A total of 20 SMDC were subjected to thermal cycling in addition to the environments specified in MIL-D-21625E.

Failures to propagate detonation were experienced on nine SMDCs and four FCDCs during the test program. Three of the FCDC failures were attributed to pre-existing conditions in the hardware involved in the failures. Two of the three failures were traced to damaged donor tips supplying the stimulus to the FCDCs. The third failure was traced to a damaged FCDC donor tip leading to a failure to propagate the detonation in a side-to-end initiation configuration. The fourth FCDC failure was considered to be legitimate. Analysis (Ref. 8, page 49) of the failed FCDC construction details revealed a possibility that a contaminating fluid such as water, cleaning agent, or hydraulic fluid could have entered past the ferrule joint internal to the FCDC and attacked the lead sheathing. The severity of chemical attack could have either deteriorated the sheath, contaminated the explosive, and/or degraded the explosive to the point that detonation transfer would be impeded.

Analysis (Ref. 8, page 60) of the nine SMDC failures showed that one was caused by a manufacturing defect introduced during inner ferrule swaging. Another failure was attributed to the test fixture configuration. Two other failures to propagate occurred within the core away from the ferrule. The remaining five failures occurred within the ferrule assembly. No plausible explanation for the two failures within the line was presented. Failure to propagate detonation within the inner ferrules was attributed to the combination of increased HNS-II core density resulting from the swaging operation, initially high density cores for the lots in question, possibly lower booster inputs, and insensitive explosive lots. The reliability estimates for the SMDC, excluding the test-fixture induced failure and pre-firing damaged tips, were found to be 0.9956 and 0.9893, respectively, for Phases III and IV of the test program.

NASA Langley Research Center, Naval Surface Weapons Center (NSWC), and McDonnell Aircraft Company personnel performed a study of SMDC ("Service Life Evaluation of Rigid Explosive Transfer Lines") which sought to determine quantitatively the affects of service and age on performance.[9] In the course of the program, 800 SMDC lines—consisting of 3 different designs, from five different aircraft—were tested. Certain lines were tested as-received while others were subjected to a repeat of the thermal qualification tests originally used to certify the SMDC for flight use. The report (page 2) stated that, as of 1981, the service life limit for SMDC used in the B-1 bomber was 3 years and on the F-16 was 15 years. SMDCs tested in the study were used in the following aircraft: AH-1G, AH-1S, F-14, B-1, and F-111. The SMDC was subjected to visual and x-radiography inspection upon receipt. Tests to

characterize the chemical nature of the SMDC HNS—along with measurements of detonation velocity, booster tip fragment velocity, and energy output—were conducted on hardware which had the least amount of age and service life. Results from this hardware established the basis against which all other test results would be compared. Service-life assessment involving destructive tests and chemical analysis was performed on SMDC which had the oldest age-with-service time. A sample of the oldest age-with-service time SMDC was also subjected to a repeat of the thermal qualification tests to assess the legitimacy of a life extension after having been subjected to service conditions.

The pertinent conclusions presented (Ref. 9, page 12) were as follows:

1. The test methodology was sufficiently accurate to detect changes in physical condition, functional performance, and chemical composition.
2. A high degree of uniformity, as measured by the above test methodology, exists among line types, manufacturing methods, and from lot to lot.
3. No detectable change occurred with age up to 10 years.
4. No detectable change occurred with service up to 7 years.
5. No detectable change occurred with rated service and a repeat thermal qualification test.
7. Degradation occurred, but at temperatures substantially in excess of service requirements. The investigation revealed that HNS with hexanitrobibenzyl (HNBiB) was the first material to degrade. The approximate degradation limits for HNS/HNBiB are above 88% by weight in the line and 80% in the booster tip. That is, failures began at thermally induced degradation at 88% by weight in the transfer lines and 80% in the booster tips. Degradation was accelerated by increased explosive loading density and by higher quantities of HNBiB. Aluminum-sheathed detonating cord with a lower HNS density was more thermally stable than silver sheathed cord. Serious degradation was detectable externally by tip swelling.

The report[9] also recommended that service life extensions for SMDC should be considered with the approach to life extension consisting of either 1) comparing requirements for the subject system to service life demonstrations of other systems, or 2) samples from the most severe high-temperature service application should be tested at the end of the specified service life with a minimum of 25 samples. The samples should consist of the oldest units available. Results from destructive testing and chemical analysis should be compared with performance standards established early in the life of the lot(s) in question. The report recommended such testing on an annual basis.

An effort to extend the service life of Shuttle Orbiter overhead window crew escape system components resulted in an extension to 15 years total life for the silver-sheathed HNS SMDC and FCDC, and aluminum-sheathed 19-grains/foot MDF used in the inner window severance assembly.[10] JSC, Langley Research Center, and Naval Surface Warfare Center (NSWC) personnel performed tests of the components used in the study. SMDC, FCDC, inner window severance assemblies, an outer window severance assembly, and TBIs were removed from Orbiter Vehicles OV-102 and OV-103, which had experienced 43 and 84 days in orbit, respectively. The total age of the hardware was 10 and 10 1/2 years for OV-102 and OV-103 at the time of test, respectively. Most of the hardware used in the evaluation had been removed from OV-102. The testing of hardware from OV-103 consisted of subjecting one each FCDC and SMDC to as-received destructive testing. Additionally, FCDC and SMDC from different lots than those used in

OV-102 and OV-103 were removed from storage. The total ages of the hardware from storage were from approximately 13 to 15 2/3 years.

Testing of hardware removed from the flight vehicles was broken into two groups. The first group was subjected to testing in the as-received condition, while the second group was subjected to qualification level thermal-cycling before destructive test and chemical analysis. All hardware was subjected to visual and x-radiography inspection upon receipt. The hardware was then subjected to the thermal-cycling (if required). Certain samples were then dissected to enable a functional performance test to be conducted in parallel with chemical and physical analysis of the HNS. The thermal cycle for the SMDC, FCDC, and window assembly MDF was from +350°F to -230°F for a total of 25 cycles with a soak time of 70 minutes at each extreme. The thermal cycle for the TBIs consisted of 25 cycles from +160°F to -65°F with the temperature stabilized at each temperature for 15 minutes.

Destructive testing of SMDC, FCDC, and MDF from the window cutting assemblies consisted of measurement of line detonation velocities and tip fragment velocities where booster tips were available. Swell cap deformation data were recorded during a destructive lot acceptance test (DLAT) for SMDC and FCDC. The detonation velocities and swell cap data were compared with DLAT data.

Chemical analysis was performed on both flight and storage FCDC and SMDC as received and following thermal cycling. Flight TBIs were subjected to as-received and thermal-cycle testing prior to chemical analysis, whereas the inner window MDF removed from OV-102 was only subjected to post thermal-cycle chemical analysis.

Results from the flight and storage hardware testing, as-received and post thermal-cycle exposure, revealed no measurable changes resulting from service or age. The thermal cycling did cause an approximately 3% to 4% reduction in detonation velocity of the FCDC. Due to consistency in chemical purity between as-received and thermal-cycle exposed units, the change was attributed to a thermally induced reduction in explosive density (Ref. 10, page 3). The results of this test program were considered to be complementary to an earlier study the Langley Research Center conducted.[9] Extension of the service life of the components was considered acceptable based upon the destructive performance data, receiving inspection, and chemical analysis results.

1.2 Analytical Techniques for Age Life Limit Assessment

Moses' report[2] stated that the Arrhenius equation could be used to determine the age life capabilities of explosive components given the expected environment to which hardware would be exposed. The validity of the above analysis is dependent upon the life-cycle being influenced by explosive chemical degradation and does not consider variable factors such as mechanical cycling, explosive contamination, and installation dependent corrosion. Accelerated aging of explosive materials is based upon the hypothesis that an equivalent amount of explosive material degradation can be accomplished in a short period of time at elevated temperature as would be experienced at a longer period of time at a lower temperature.[11] Reaction rate kinetics equations must be developed for the explosive in order to calculate the amount of degradation expected for a given exposure time at a selected temperature.

Methods specifically adopted in reference 11 consisted of exposing materials to combined vacuum and thermal environments and measuring the weight loss with respect to time. The degradation factor, α,

represents the normalized weight loss for the material being tested, and correlation between the degradation factor and reaction rate is accomplished by numerically expressing α such that a plot of α with respect to time is linear. The slope of the resulting line represents the reaction rate. An example of such an equation is

$$k*t=\ln(1-\alpha) \qquad (2)$$

where

α	=	degradation factor
k	=	reaction rate (units/sec)
t	=	time in seconds.

Plotting ln(k) versus 1/T for a number of test points results in a curve whose slope is equivalent to E/R described in the Arrhenius equation (1). Given the two sets of equations, once the E/R term is known, we can extrapolate the data to other temperatures over a limited range. Implicit with this approach is the assumption that the activation energies for the reactions do not change over the temperature range of interest (Ref. 11, page 3).

Materials aging can be described in terms of thermal-decomposition kinetics which can then be related to the ballistic properties of interest. Detonation velocity, steel plate dent depth, and output pressure are properties of interest in performing an age life assessment for crew escape system components. In Rouch's case, isothermal decomposition data were represented in the form of explosive weight loss as a function of time, and determination of rate constants and activation energies was dependent upon collection and analysis of data at different temperatures with respect to time. The measured characteristic is then expressed as a function, such as shown in equation (2), such that the function is linear with respect to time.

Using experimental test data to establish reaction rates for chemical phenomena was discussed with the goal of providing chemical kinetic equations for use in predicting long-term reactivity of propellant systems.[12] The method described consisted of making observations of a given variable with respect to time. Slope of the curve with respect to time represents the reaction rate, which may or may not vary with time, depending upon the order of the reaction rate. For example, the plot of the expression

$$\ln c = \ln c_o + kt \qquad (3)$$

with respect to time has the slope of the reaction rate, k (Ref. 12, page 30). In equation (3), c may represent a concentration of a given chemical reactant and c_o may represent the initial concentration of the reactant. The report points out that the kinetic rate descriptions are not limited to expressions in terms of concentrations but can be divided into two categories: chemical and physical. Chemical methods of determining kinetic rate reactions would include measuring a chemical element concentration of one or more of the reactants or products. Physical methods would involve measuring one or more physical characteristics which change as the reaction progresses. The report stated that it is theoretically possible that any physical characteristic could be used to establish a kinetic reaction rate as long as the changes are related to the reaction process.

The report also analyzed the buildup of titanium in liquid fluorine and proposed a zero-order reaction on the basis that the reactants are effectively constant over the course of the test and, thus, the rate can be considered constant. If the reaction was first-order, then the reaction rate would depend upon the concentration of titanium in the propellant, which would have to be measured with respect to time. Based upon establishment of a zero-order reaction rate and measurement of rates of titanium concentration buildup by measuring contaminant level, a maximum possible rate of titanium buildup in the propellant was determined. The resulting rate equation could be used to predict the resulting corrosion of a propellant-tank system given contaminant levels and expected storage temperatures. The report emphasized the fact that kinetic-rate expressions are arrived at through a trial-and-error approach, requiring analysis of the data to determine a reliable and conservative expression for the system parameters of interest.

A useful insight into the details of kinetic-rate expression development presented in the report is the fact that most reaction types, e.g., first-order, second order, etc., exhibit pseudo-zero-order rates when the concentration of the products is small when compared to the reactant concentrations.[12] This fact is important to consider when analyzing the data from explosive test articles, since the concentration of degradation byproducts is typically small when compared to the original explosive concentration.

The JANNAF Structures and Mechanical Behavior Subcommittee proposed using the Arrhenius equation to develop a prediction of life-cycle limits for solid propellant rocket motors.[13] The analytical technique flow diagram presented in their report required the following steps:

1. Identify a problem area that would lead to motor failure.
2. Determine an appropriate technique.
3. Measure applicable material properties.
4. Input load conditions.
5. Perform the service life analysis.
6. Verification.

The cycle described above may be repeated many times to develop an accurate service life prediction methodology. Verification of service life may be accomplished using hardware subjected to accelerated aging or overtest. Pertinent to this paper is reference 13's discussion devoted to the prediction of propellant aging characteristics.

Reference 13 emphasized the fact that the reaction rate was a function of both the temperature and type of reaction occurring. Knowing whether the reaction was zero-, first-, second-, or higher-order would assist in defining the equation describing the chemical kinetics of degradation. Their report presented an example of a zero-order reaction in propellant systems which is the degradation of stabilized nitrate esters. Based upon the stoichiometric equation for the reaction, the reaction rate would normally depend upon the concentration of the nitrate ester undergoing the decomposition. The amount of nitrate ester consumed in the reaction, however, is so small that the reaction is said to be pseudo zero-order. The equation describing such a reaction is

$$k = -ds/dt \tag{4}$$

where ds/dt represents the change in stabilizer content with respect to time and is expressed in units/time. The plot of concentration versus time is expected to be linear.

The Subcommittee's report stated that first-order reactions are perhaps the most common in aging propulsion systems.[13] Cited examples of first-order reactions in solid propellant systems included the hydrolysis of binders, oxidative hardening of bulk HTPB propellant, and losses of modulus reinforcement due to crystal growth. The example of the hydrolysis reaction involved two reactants and two products with the resulting stoichiometric equation taking the form

$$A + B \Leftrightarrow C + D \tag{5}$$

where

A	=	ester content for the propellant
B	=	water content from the atmosphere
C and D	=	products of the hydrolysis reaction

The report emphasized that, since the moisture term, B, was in large supply, the reaction rate was dependent upon the ester concentration, term A.[13] Since the direct consequence of the hydrolysis reaction is a degradation of propellant mechanical properties, those properties influenced by the degradation can be measured over time and used to solve for the reaction rate. The resulting first-order rate equation from equation (5) can be expressed as

$$k*t=\ln(A/A_o) \tag{6}$$

where

A	=	concentrations of the ester at any time
A_o	=	concentrations of the ester at the start of the measurements

The terms A and A_o can be replaced with measured properties of the propellant influenced by the chemical kinetics. The report presented a typical first-order reaction equation

$$k*t = \ln(P/P_o) \tag{7}$$

where P and P_o are physical properties:

P	=	the property as measured at any aging time
P_o	=	the original measured property

The reaction rate units are time^{-1}, and the plot of ln(P) or ln(P/P_o) will be linear with respect to time.

An example of a second-order equation is illustrated using the stoichiometric relationship in equation (5) as a basis and expressing the rate relationship as

$$-dA/dt=-dB/dt = k*A*B \tag{8}$$

with the terms A and B representing concentrations or, if appropriate, two different properties of the material. The solution to equation (8) is presented (Ref. 13, page 37) as

$$k*t= 1/(A-B) * \ln\{B*(A-X)/(A*(B-X))\} \quad (9)$$

with X representing the amount of each reactant that has reacted after time t. The resulting concentration of each constituent is then A-X and B-X. A plot of 1/(A-B) * ln{B*(A-X)/(A*(B-X))} with respect to time will be linear with a slope of the reaction rate k.

Equations (4) through (9) illustrate the chemical kinetic relationships for zero-, first-, and second-order reaction rates which enable computation of the reaction rate, k, through experimental observation and analysis of results. A plot with respect to time of the right-hand sides of equations (4), (6), (7), and (9) would result in a linear slope of k if the chemical reactions were zero-, first-, or second-order respectively. The JANNAF Subcommittee's report stated that experimental observation of hardware placed into a controlled environment would enable the periodic measurement of property degradation. The results could then be inserted into the various-order rate equations and compared with the overall data set at different time intervals. The equation providing the best fit to the experimental data is the closest to the true order of the chemical reaction occurring within the hardware. Their report pointed out that virtually all test data could be analyzed in this manner. Aging study data analysis was broken into a series of steps (Ref. 13, page 41):

1. Group data by variables involved in the study.
2. Plot the data for zero-, first-, or second-order kinetics.
3. Perform linear regression of the data for appropriate-order kinetics with new plots of the results.
4. Analyze data for evidence of a kinetics change during the aging process and separate the phases accordingly, treating each phase with its own set of kinetics equations.
5. Compare correlation coefficients for the zero-, first-, and second-order reaction equations to select the most appropriate model.
6. Compare the effects each variable has had on performance, and discard those with no observed effect from the study.
7. Determine the least-squares standard deviation for each rate constant using standard linear regression techniques. Generally, standard deviations of less than 25% are needed to perform Arrhenius analysis of data.

H. J. Hoffman reviewed the method of subjecting propellant systems to elevated temperatures with the basis of analysis being the Arrhenius equation.[14] According to the report, the uncertainty of how the elevated temperature exposure influences the degradation mechanisms, and limited correlation between actual aging and accelerated aging response, require caution on the part of the analyst.

2.0 Test Program Description

2.1 Test Hardware

We selected hardware for this study from pyrotechnic lots available from JSC ground-bunker storage which had ages ranging from 29 to 7 years and sheath materials including lead, silver, and aluminum. HNS was used in all materials included in this study, since the objective of the testing was to characterize the degradation of Shuttle crew escape system components which contain HNS. Table 2 presents the

hardware type, manufacturing date, age at time of test, and lot number of components used in this test program. Figure 1 illustrates the overhead window crew escape system and Figure 2 shows a schematic of the overhead window crew escape system explosive train. Figure 3 illustrates the side hatch crew escape system and Figure 4 shows a schematic of the explosive train. All of the materials used in the study were manufactured by ET, Inc., Fairfield, California. The FCDC used in the test is from the same production lot as is currently installed in the Shuttle fleet on the side hatch crew escape system. Figure 5 illustrates an FCDC end fitting. For comparative purposes, Figure 6 shows a schematic of an SMDC end fitting. SMDC is used in both side hatch and overhead window crew escape systems, although no SMDC was included in this test series. Of the installed FCDCs in the fleet, only 2 lines experience flexing during normal vehicle processing at KSC: the lines leading to the hinge severance system on the side hatch (Fig. 3). The FCDCs connected to the center console T-handle initiator and outer window also experience occasional flexure during vehicle operations. Figures 7, 8, and 9 depict MDF, LSC, and expanding tube assembly (XTA), respectively, from which the 18.52-grains/foot MDF was extracted. The 20-grains/foot LSC is the same design as is currently used in the vent severance assembly but is from a different lot.

Table 2
Hardware, Age, and Lot Descriptions Used in HNS Degradation Study

Hardware Description	Destructive Lot Acceptance Test Date	Age at Time of Test	Lot Number
Silver-Sheathed 6-Grains/Foot HNS-II MDF	10/66	29-1/2 years	146441
Silver-Sheathed 8-Grains/Foot HNS-II MDF	1/72	24 years	69148102
Lead-Sheathed 2.5-Grains/Foot HNS-II MDF; HNS-I in Booster Tip	10/87	8-1/4 years	7919-8301
Aluminum-Sheathed 18.52-Grains/Foot HNS-II MDF; HNS-I in Booster Tip	10/87	8-1/4 years	0767-8401
Aluminum-Sheathed 20-Grains/Foot HNS-II LSC	8/71	24-1/2 years	6857-73012

Although the materials chosen do not represent each configuration of hardware installed in the crew escape systems, the observed phenomena in this test program, coupled with results from earlier studies—particularly references 9 and 10—were assessed to determine applicability to all components using the HNS.

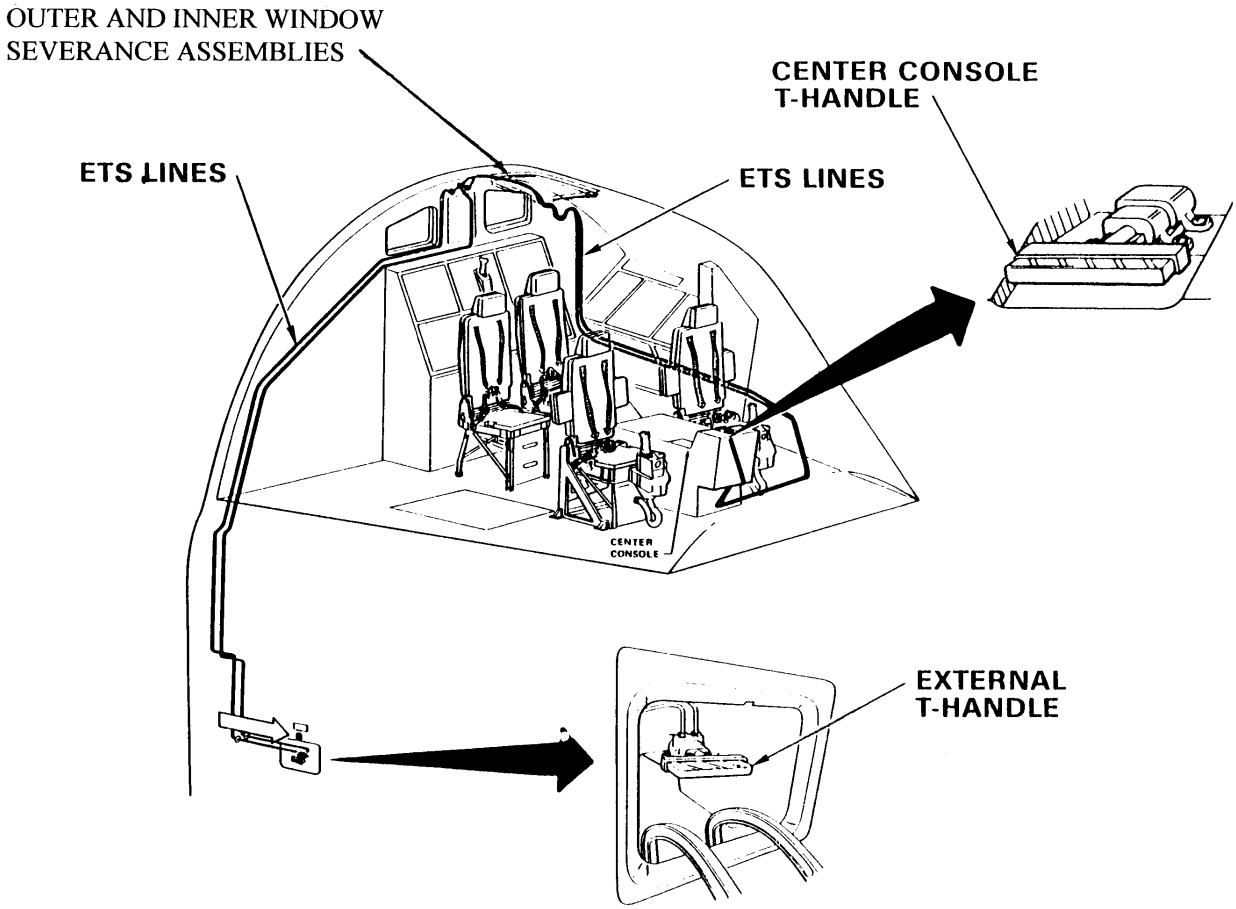

Figure 1. Overhead window crew escape system overview.

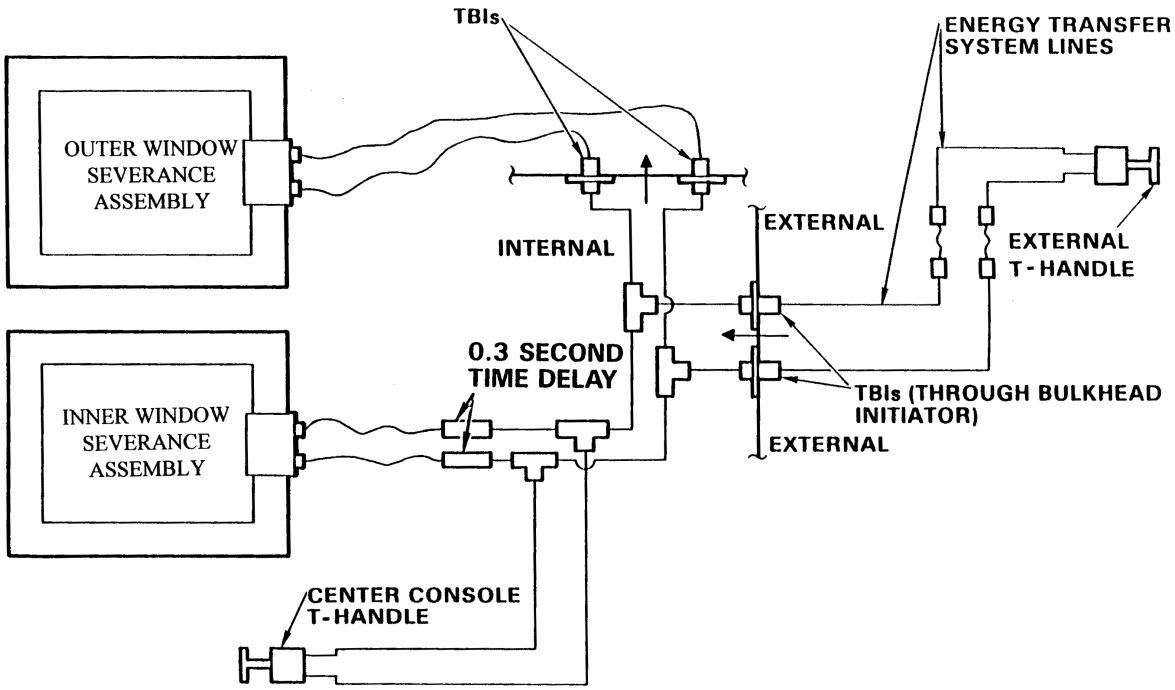

Figure 2. Overhead window crew escape system explosive train schematic.

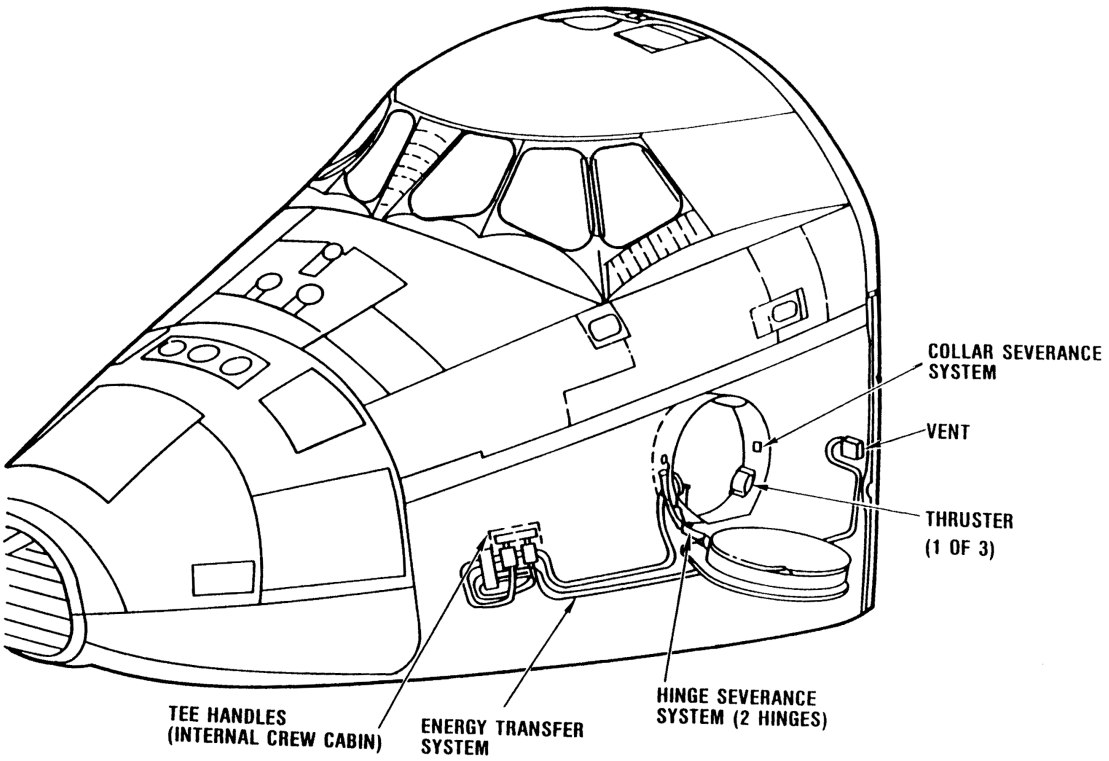

Figure 3. Side hatch crew escape system overview.

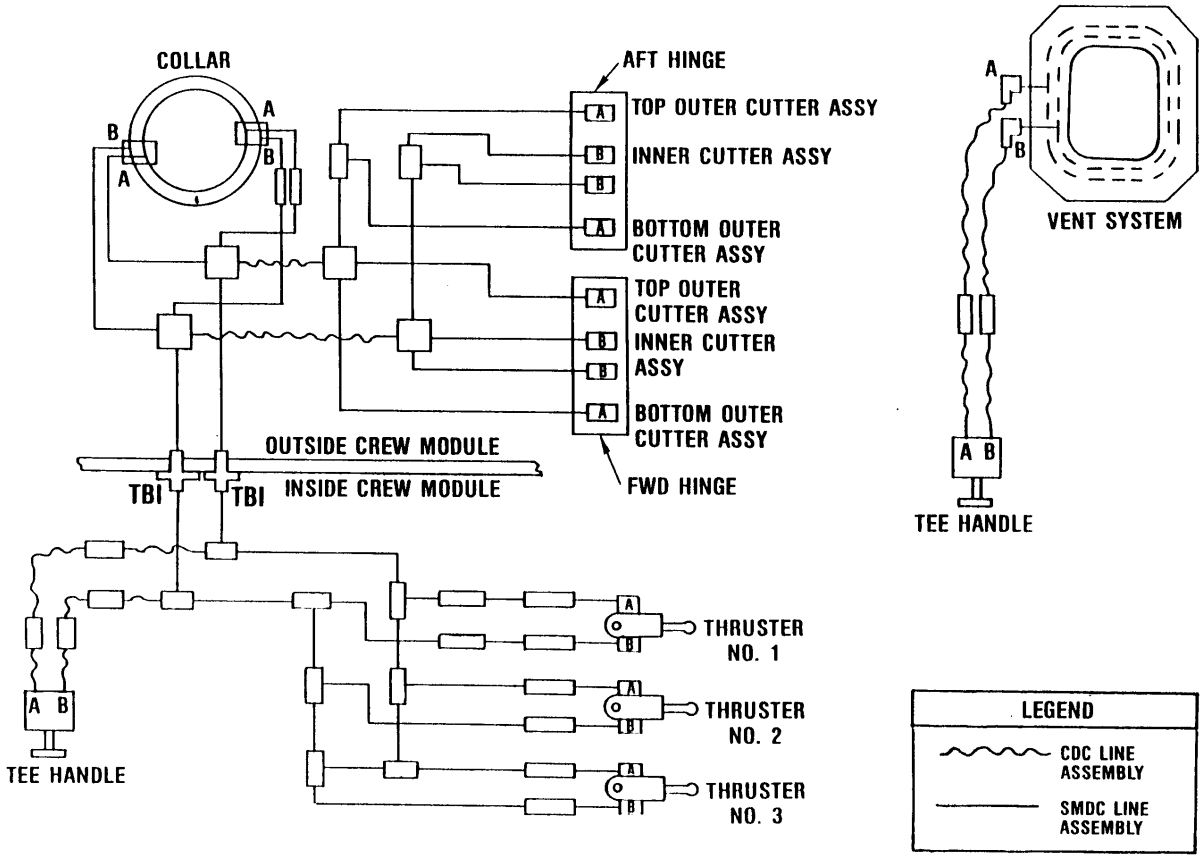

Figure 4. Side hatch crew escape system explosive train schematic.

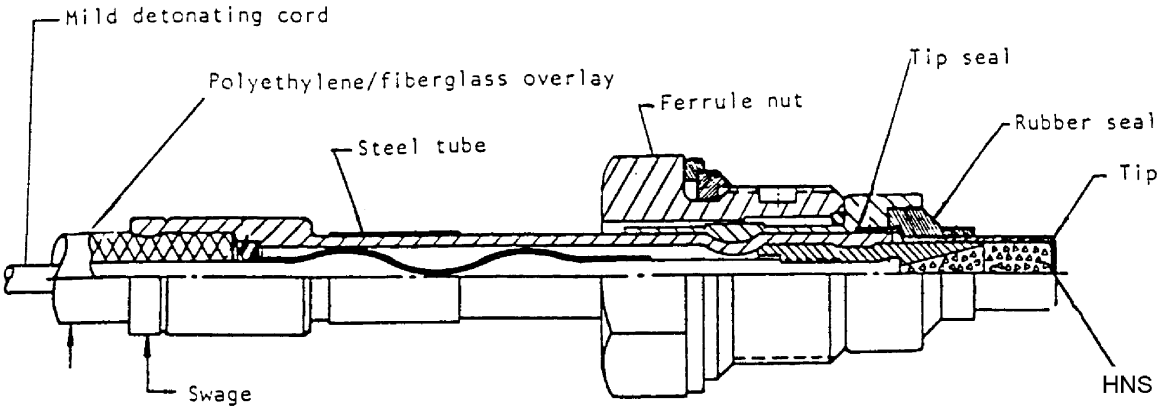

Figure 5*. Cross section of an FCDC end fitting.

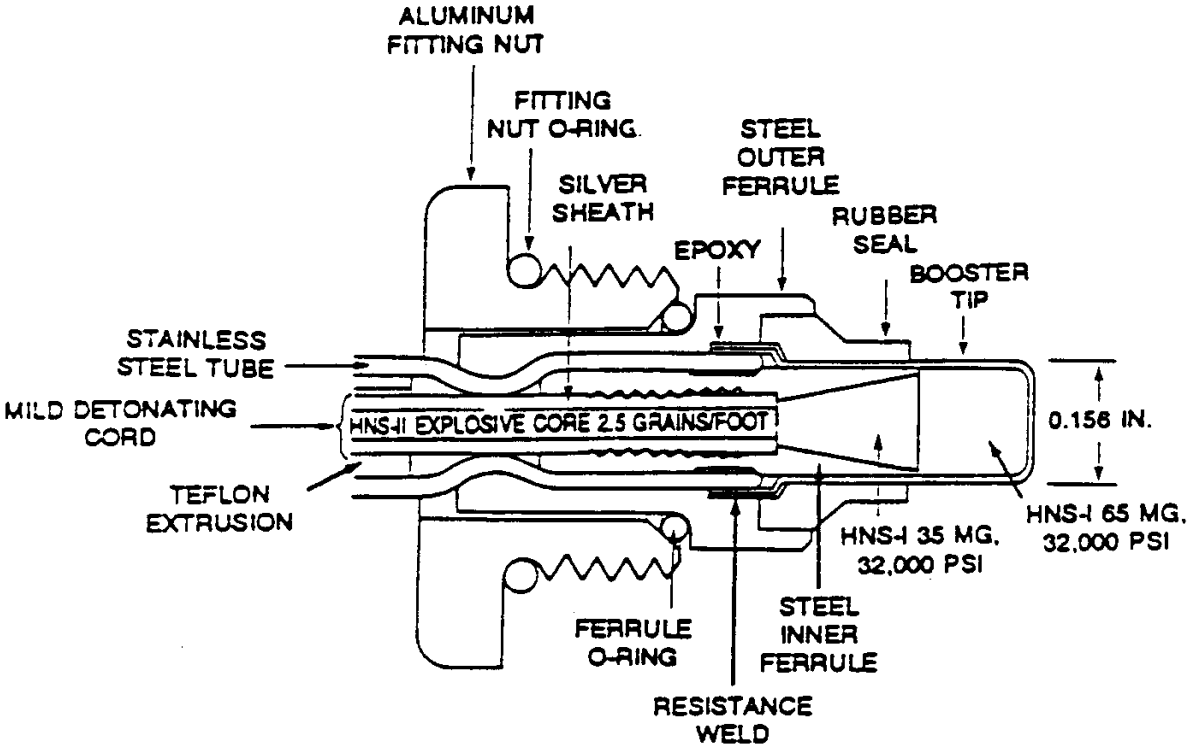

Figure 6. Cross section of an SMDC end fitting.**

* Ref. 9, page 18
** Ref. 8, page 57

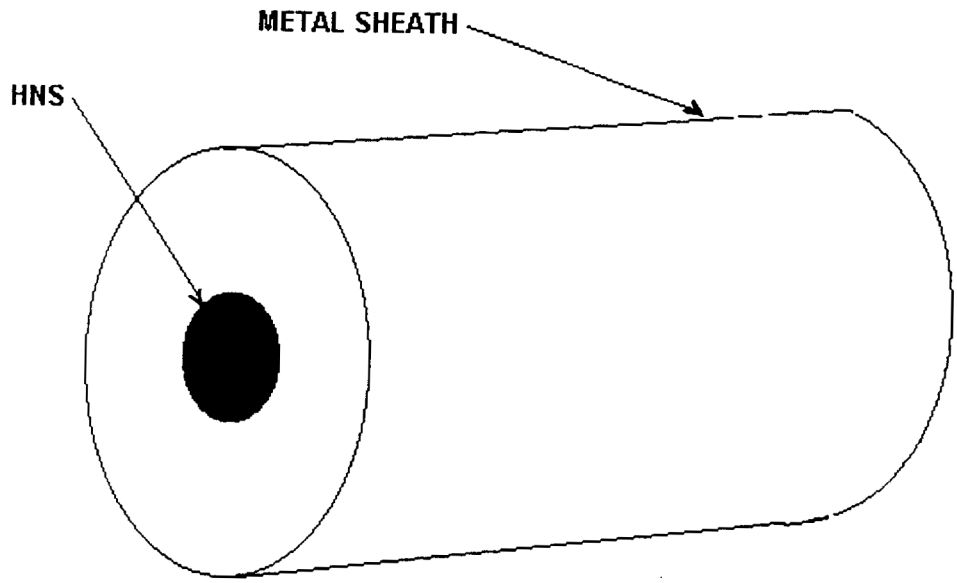

Figure 7. Mild detonating fuse (MDF).

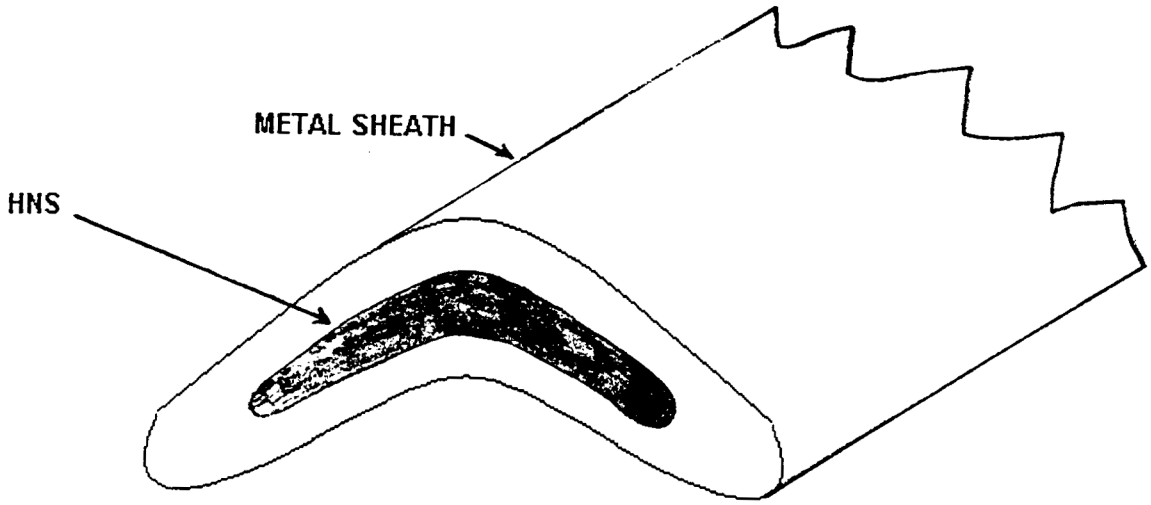

Figure 8. Linear shaped charge (LSC).

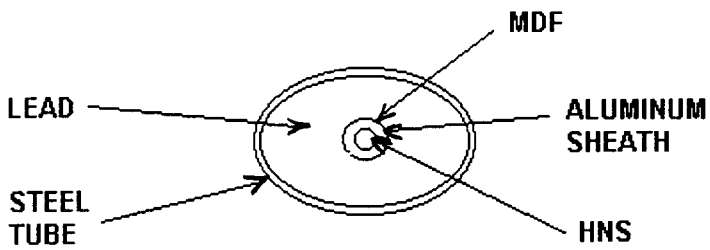

Figure 9. Expanding tube assembly (XTA).

2.2 Test Procedure

The test plans and procedures are described in references 15 and 16 and entailed obtaining samples of each hardware type and cutting 25 one-foot segments, where possible. Table 3 depicts a matrix of the test sample disposition. The XTA, which contained the 18.52-grains/ft MDF, was not cut into one-foot segments due to limited materials; instead, the XTA was subjected to the required thermal environment and then a one-foot segment cut and subjected to chemical analysis. The exposed HNS at the end of each cut segment was coated with glyptol to protect against moisture intrusion.

Table 3
High-Temperature Exposure Test Matrix

Hardware Description	Control Group	Group A 155°F for 30 Days	Group B 155°F for 60 Days	Group C 250°F for 30 Days	Group D 250°F for 60 Days
6-gr/ft MDF	2 samples	5 samples	5 samples	5 samples	5 samples
8-gr/ft MDF	2 samples	5 samples	5 samples	5 samples	5 samples
20-gr/ft LSC	2 samples	5 samples	5 samples	5 samples	5 samples
FCDC	2 samples	5 samples	5 samples	5 samples	5 samples
XTA	N/A	N/A	N/A	N/A	1 sample

The test and analysis approach used in this test program was based upon the methodology used in references 9 and 10, and ET Inc., Fairfield, Ca., detonation velocity measurement standard 25-02-02, except booster tip fragment velocities were not measured where applicable; instead, swell cap measurements were taken. Using the referenced techniques for determining reaction rate equations, both at a given temperature with respect to time and with respect to two temperatures, we used measurement of performance characteristics and chemical degradation to investigate the order of the reaction and the appropriate Arrhenius equation constants.

Hardware was dissected in accordance with Table 2 requirements and subjected to the specified environments. Upon removal from the thermal environments, visual inspection of the hardware, except for

the FCDC, revealed no obvious changes in the finish, form, or color that would indicate thermal-induced degradation. The FCDC segments experienced a flow of the polyethylene sheath at the 255°F temperature. The polyethylene sheath is extruded over the lead sheath of the 2.5-grains/foot MDF. This condition was noticed when the fiberglass overwrap and polyethylene sheath were cut back in preparation for detonation velocity testing. Figure 5 illustrates the cross section of a typical FCDC showing the core charge, sheath, polyethylene sheath, and fiberglass overwrap.

We sent two samples from the FCDC control group—one sample each from the FCDC exposed to the four environments in Table 3—and the one XTA sample from Group D shown in Table 3 to the NSWC, Indian Head, Maryland, for chemical analysis. We requested HPLC chemical analysis to measure the content of HNS and HNBiB in each of the samples. Discussion of the HPLC analytical techniques in determining purity levels of HNS and HNBiB is found in references 9, 10, 17, and 18.

2.3 Test Results

2.3.1 Destructive Test Firing Results

Figure 10 shows destructive test results for the FCDC, including DLAT results. The data in Figure 10 are grouped according to environments to which the hardware was exposed. Appendix A contains tabulated data for the FCDC destructive test results. No DLAT data for FCDC swell cap measurements are available since the measurements were taken on SMDC test lines receiving the detonation input from the test FCDC.

Figure 11 shows destructive test results for the 6-grains/foot MDF, including DLAT results. The data in Figure 11 are grouped according to environments to which the hardware was exposed. Appendix B contains tabulated data for the FCDC destructive test results.

Figure 12 shows destructive test results for the 8-grains/foot MDF, including DLAT results. The data in Figure 12 are grouped according to environments to which the hardware was exposed. Appendix C contains tabulated data for the FCDC destructive test results.

Figure 13 shows destructive test results for the 20-grains/foot LSC, including DLAT results. The data in Figure 13 are grouped according to environments to which the hardware was exposed. Appendix D contains tabulated data for the 20-grains/foot LSC destructive test results.

Detonation velocity testing of the XTA was not possible due to the assembled hardware configuration. Only HPLC analysis of the 18.52-grains/foot MDF HNS was performed. Section 2.3.2 presents the results of the chemical analysis.

2.3.2 Chemical Analysis Results

Table 4 shows the results of the chemical analysis of the FCDC and 18.52-grains/foot MDF. No analysis of this type was conducted on the original lots of material and, as a result, no comparisons can be made to determine the effect aging under normal storage conditions has had on chemical purity. The 1995 analysis of HNS-II levels within all FCDC samples subjected to environments along with the control group samples and the single 18.52-grains/foot sample show the materials to be pure, according to the NSWC, Indian

Head, Maryland.[19] There were no observed traces of contaminants such as HNBiB or TNT in either the control group samples or on post thermally conditioned hardware. Given that the only observed peaks on the chromatographs were from HNS-II, the samples are considered to be pure HNS-II. Temperatures in the test program have had no apparent affect on the HNS contained within each component. Since the HNS contained within the 18.52-grains/foot MDF used in this test is from the same HNS lot as is installed into the FCDC lot, and both materials have been under identical storage conditions, the initial purity levels for both are considered to be the same.

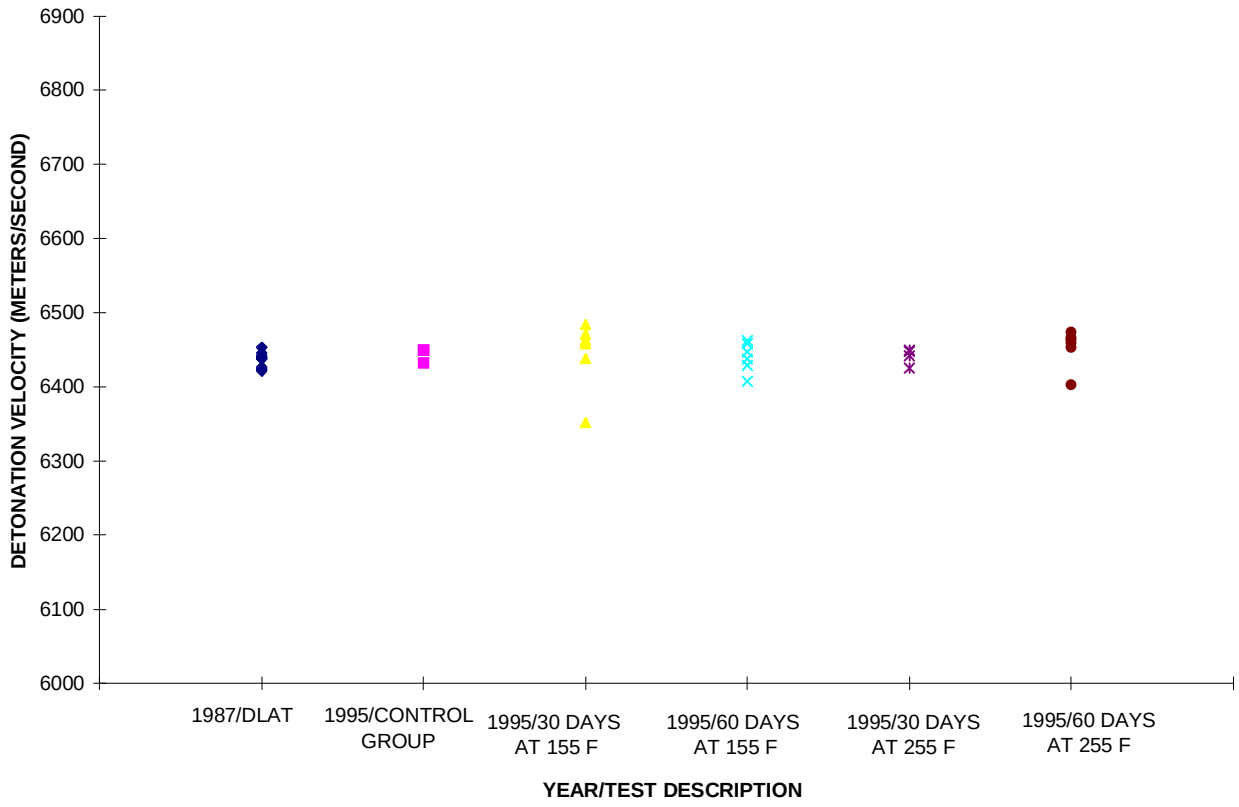

Figure 10. FCDC lot WAG detonation velocity measurements versus time and temperature.

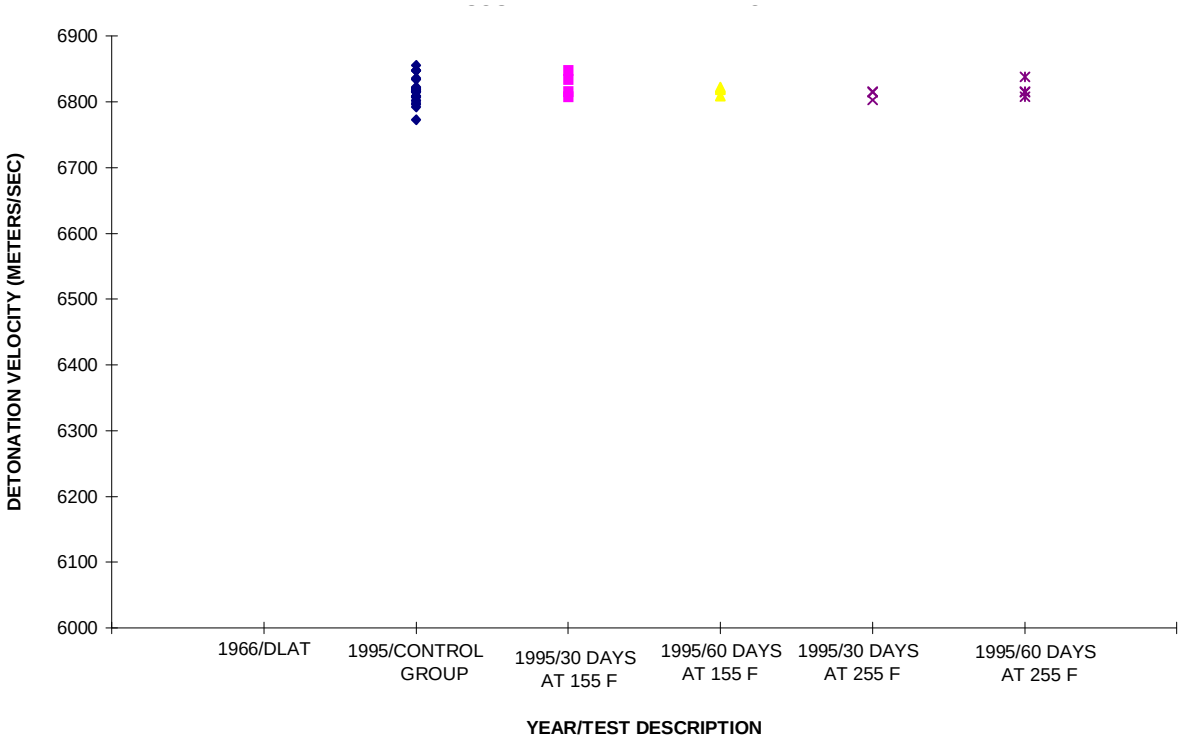

Figure 11. 6-grains/ft MDF detonation velocity versus time and temperature.

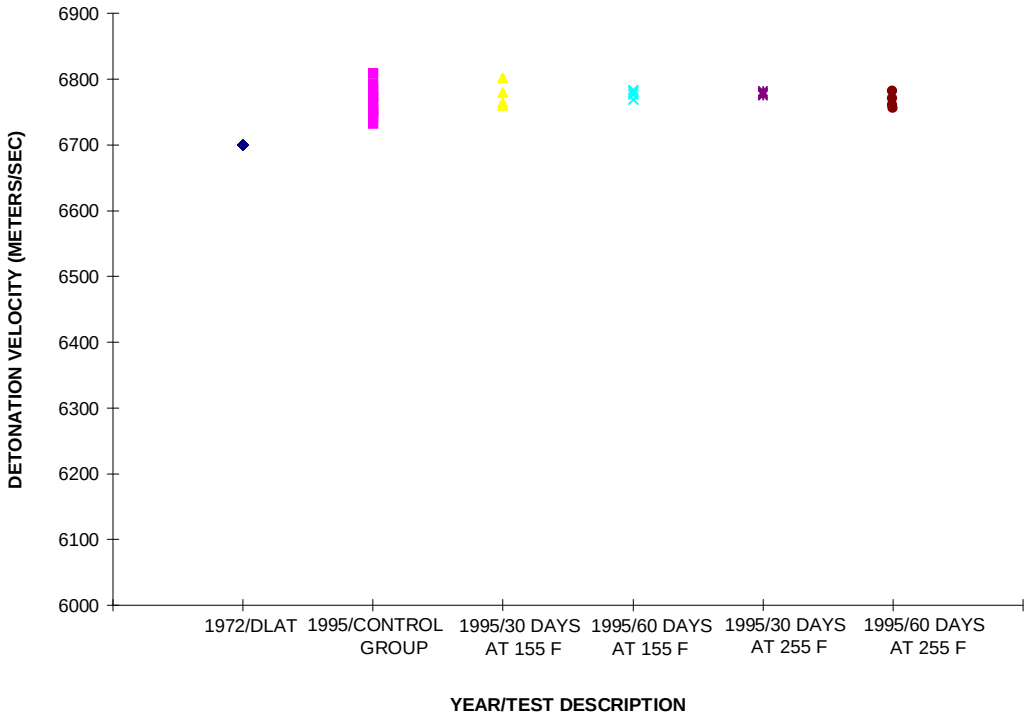

Figure 12. 8-grains/ft MDF detonation velocity versus time and temperature.

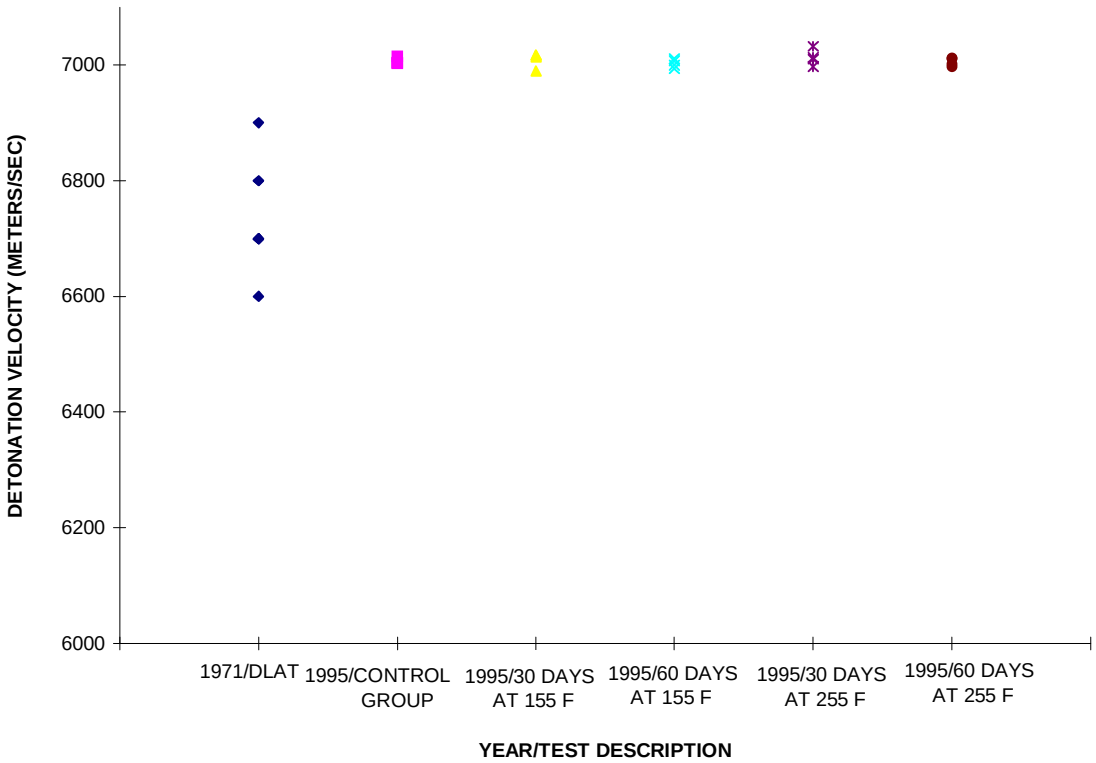

Figure 13. 20-grains/ft LSC detonation velocity versus time and temperature.

Table 4
HPLC Analysis Results for Explosive Components Subjected to Environmental Exposure

Test Article/ Test Group	30 Days at 155°F	60 Days at 155°F	Control Group	30 Days at 255°F	60 Days at 255°F
FCDC	pure HNS	pure HNS	pure HNS	pure HNS	pure HNS
18.52 Grains/Foot	NA	NA	NA	NA	pure HNS

3.0 Discussion and Analysis of Results

3.1 Linear Regression Analysis of Data

The data will be analyzed in the sequence presented in section 2.3.1. FCDC test results shown in Figure 10 were assessed to determine what reaction order would best describe the observed performance with respect to time at both temperatures. Linear regression analysis of the data using equations described in equations (4) and (6)resulted in the following linear correlation coefficients:

	Zero-Order Kinetic Equation	*First-Order Kinetic Equation*
155°F data	0.0542	0.0537
255°F data	0.233	0.232

These linear correlation coefficients are not significant and do not allow for confidence to be placed in a linear equation with a non-zero slope.

For a relationship to have been established with a 0.95 confidence level for the 155°F and 255°F data, the linear regression coefficients needed to exceed 0.514 and 0.553, respectively. Visual inspection of Figure 10 confirms that there is no slope to the detonation velocity versus time data. The analysis of variance (ANOVA) of the detonation velocity data resulted in a conclusion that the data cannot reject a claim, with 0.95 confidence, that the means of each data set are equal.

The following values were calculated in the single-factor ANOVA:

	Value of Test Statistic, F	*Critical Values for F*
155°F FCDC test results	0.027	3.88
255°F FCDC test results	0.4748	4.102

As a further guide to interpret the data, the value of F for all lot WAG FCDC firings, including DLAT, was 2.23 whereas the critical value for F was 3.67. Since the calculated value of F for all firings of lot WAG FCDC was below the critical F value, the statement that the means of all firing data sets are equal cannot be rejected with a confidence of 0.95. Insufficient evidence exists to show any trend in the data with 0.95 confidence. The linear regression and variance analysis corroborated the visual inspection zero-slope of the data in Figure 10.

Linear regression analysis of the 6-grains/ft MDF test data resulted in the following linear correlation coefficients:

	Zero-Order Relation	*First-Order Relation*
155°F data	0.067	0.067
255°F data	0.018	0.001

The zero-order correlation coefficients were below the critical values of 0.33 and 0.35 for the 155°F and 255°F firings, respectively. Both first-order linear correlation coefficients were below the critical values of 0.330 and 0.35, respectively. Based upon the regression analysis results, insufficient evidence exists to show a linear relationship between time-at-temperature and detonation velocity with 0.95 confidence. Linear regression analysis of the DLAT data, gathered in 1966, and the 1995 control group firings resulted

in a linear correlation coefficient of 0.504 while the critical linear correlation coefficient was 0.248. The linear equation resulting from the regression analysis of the control group and DLAT data is

$$y(\text{meters/second}) = 2.99*X(\text{years}) + 6730\ (\text{meters/second}) \quad (10)$$

The ANOVA for the control group and DLAT 6-grains/ft MDF firings resulted in an F value of 20.49 while the critical F value was computed to be 4 with a confidence of 0.95. The conclusion drawn from the ANOVA is that the means of the control group and DLAT data are not equal. In addition, the standard deviations and range of data were significantly different:

	Standard Deviation	*Range of Data*
6-Grains/ft MDF DLAT Data	96.15 meters/second	340 meters/second
Control Group Data Set	19.23 meters/second	83 meters/second

The fact that the control group standard deviation and range was significantly lower than the DLAT data set's, developed 29 years ago, may point to data acquisition variance in 1966 which has improved using current technology. The performance of the 6-grains/ft MDF lot 146441 may not have changed in the 29-year period between tests, only the accuracy of the measurements. In either case, the performance of all hardware in each test group met the performance requirements of the 6-grains/ft MDF.

Linear regression analysis of the 8-grains/ft MDF test data resulted in the following linear correlation coefficients:

	Zero-Order Relation	*First-Order Relation*
155°F data	0.266	0.267
255°F data	0.086	0.087

The zero-order and first-order correlation coefficients were below the critical value of 0.433 for both the 155°F and 255°F firings. Insufficient evidence exists to show a linear relationship between time-at-temperature and detonation velocity for the 8-grains/ft MDF with 0.95 confidence.

Linear regression analysis of the 8-grains/ft MDF DLAT data—gathered in 1972—and the 1995 control group firings resulted in a linear correlation coefficient of 0.923 while the critical linear correlation coefficient was 0.349. The relationship established from the regression analysis is

$$y\ (\text{meters/second}) = 2.87*X(\text{years}) + 6700\ (\text{meters/second}) \quad (11)$$

Note that each data point recorded during DLAT was 6.7 km/sec. It is highly improbable that each DLAT measurement was exactly 6.7 km/sec, but instrumentation accuracy, technique, and planned use of the data contributed to rounding the number to 6.7. The mean of the control group data is 6766 meters/sec, a difference of only 66 meters/sec.

The following values were calculated in the ANOVA analysis:

	Value for F for 8-grains/ft MDF Firings	*Critical Values for F*
155°F test results	0.693	3.63
255°F test results	0.584	3.683

The conclusion drawn from the ANOVA is that the data are insufficient to reject the statement that the means of the control group and test groups are equal with a confidence of 0.95. Temperature conditioning of the 8-grains/ft MDF had no measurable effect on detonation velocity.

Linear regression analysis of the 20-grains/ft LSC test data using zero-order and first-order relations resulted in linear correlation coefficients of 0.166 and 0.044 for the 155°F and 255°F firings, respectively. The resultant correlation coefficients are below the critical value of 0.532 for both the 155°F and 255°F firings, respectively. Insufficient evidence exists to show a linear relationship between time-at-temperature of the 20-grains/ft LSC and detonation velocity with 0.95 confidence.

Linear regression analysis of the DLAT data—gathered in 1971—and the 1995 control group firings resulted in a linear correlation coefficient of 0.897, while the critical linear correlation coefficient was 0.576. The relationship established from the regression analysis is

$$y \text{ (meters/second)} = 9.99 * X\text{(years)} + 6766 \text{ (meters/second)} \qquad (12)$$

The difference in the mean velocity values between the DLAT and control group samples is 239 meters/second with the DLAT values being lower than the control group's. No plausible explanation exists for the apparent increase in mean detonation velocity over the 24-year period. The hardware is still within the performance specification tolerance, since there are no upper limits placed on detonation velocity for the LSC.

The following values were calculated in the ANOVA analysis:

	Value for F for 20-grains/ft LSC Firings	*Critical Values for F*
155°F test results	0.516	4.25
255°F test results	0.678	4.26

The conclusion drawn from the ANOVA is that the data are insufficient to reject the statement that the means of the control group and test groups are equal with a confidence of 0.95. Temperature conditioning of the 20-grains/ft LSC has had no measurable effect on detonation velocity.

3.2 Worst-Case Predictions of Performance

The analysis in section 3.1 was performed to establish whether or not the data exhibited trends which would fit zero-, first-, or second-order chemical degradation. Without exception, the elevated temperature exposure did not alter the detonation velocity of the FCDC, 6-, 8-, and 18.52-grains/ft MDF, and the 20-grains/ft LSC. Statistical analysis of the detonation velocity results proved that the means of each test sample before and after exposure to environments were identical. The difference between detonation velocities observed during DLAT and control group firings for the 6- and 8-grains/ft MDF and 20-grains/ft LSC is significant. Similar increases in detonation velocity were not observed on the FCDC used in this test program or on SMDC after 16 years of ground storage demonstrated in reference 10. The Navy reported similar observations of increasing detonation velocity with respect to total age as discussed in the literature search above. The conclusion from the collection of all firings conducted to date on Shuttle hardware is that this phenomenon has not been observed and is not corroborated with past detonation velocity test data or chemical analysis results.

The worst-case assessment using slopes of degradation curves developed through the regression analysis is that there is no measurable change with respect to time over the temperature ranges investigated. As a result, the data support an estimate that 20-year service life will not result in degradation of the HNS. Since no measurable degradation was observed in this test program at temperatures of 155°F and 255°F, and no measured degradation occurred on flight hardware removed from Space Shuttle Orbiters,[10] we conclude that the HNS-loaded components have not and will not experience thermal-induced degradation in service.

Assuming, for illustrative purposes, that the 255°F temperature exposure for 60 days resulted in a decrease from the FCDC average plus 3-sigma DLAT detonation velocity (6467.6 meters/second) to the minimum specification allowable detonation velocity (6000 meters/second), we can make a worst-case estimate of service life capability at an 80°F average storage temperature. Using the first-order reaction rate described in equation (6), the computed k at 255°F is -1.25E-3/days. Applying the reduction factor of 1/2 to the reaction rate for every 18°F drop in temperature, the reaction rate at 80°F is -1.4E-7/days. Using the computed reaction rate of -1.4E-7/days, approximately 1,250 years at an average temperature of 80°F would be required to degrade the FCDC such that the lot would perform with a detonation velocity of 6000 meters/second. We present the above information to demonstrate that the data obtained in this test program have proven the robust life capabilities of the hardware in a generic sense. Based upon the data and flight hardware experience, assignment of a 20-year life to all HNS loaded components in the Shuttle Orbiter is justifiable.

4.0 Conclusions

The Department of Defense's experience with crew escape system components demonstrates the need to focus on specific applications in assigning service life limits. Unique environments applicable to different aircraft and missile systems mandate field sampling and surveillance testing to corroborate the design expectations. Using this methodology, the Space Shuttle Orbiter crew escape system components have, to a degree, been removed from the flight vehicles and ground storage and tested. Absence of trends in detonation velocity, swell cap, and chemical purity analysis, justifies the increase in allowable service life to a total limit of 20 years for components using HNS for explosive material. We therefore propose a 20-

year service life limit with the acknowledgment that further testing as the hardware reaches 20-year life will probably result in another extension of service life.

5.0 Bibliography

[1] MIL-STD-1576, "Electroexplosive Subsystem Safety Requirements and Test Methods for Space Systems," Department of the Air Force, July 31, 1984.

[2] Moses, S.A., "Accelerated Life Test for Aerospace Explosive Components," Seventh Symposium on Explosives and Pyrotechnics, Philadelphia, Pennsylvania, September 1971.

[3] NSTS 08060 Revision H, "Space Shuttle System Pyrotechnic Specification," National Aeronautics and Space Administration, Space Shuttle Program, February 11, 1994.

[4] Pigg, I.A., "Quality Evaluation: Navy Fleet-Returned AH-1J/T Helicopter Window Cutting Assemblies and Shielded Mild Detonating Cords," IHTR 1161, Naval Ordnance Station, Indian Head, Maryland, May 31, 1988.

[5] Pigg, I.A., "Quality Evaluation: Air Force Service-Returned A-7K Aircraft Flexible Confined Detonating Cords, P/N 816209," IHTR 860, Naval Ordnance Station, Indian Head, Maryland, November 11, 1983.

[6] Pfleegor, C.A., "Surveillance: Navy Fleet-Returned Harpoon Missile Capsule Detonator, SMDC, and FCDC," IHTR 793, Naval Ordnance Station, Indian Head, Maryland, November 15, 1982.

[7] Nugent, C.M., "Service Life Evaluation Program (SLEP) for S-3 Aircraft Canopy/Hatch Severance System Explosive Actuated Devices, Phases III and IV," IHTR 1124, Naval Ordnance Station, Indian Head, Maryland, May 6, 1988.

[8] Carr, B.M, "Service Life Evaluation Program (SLEP) for F-14A Aircraft Canopy Jettisoning and Ejection Seat Ballistic Sequencing System Explosive-Actuated Devices (Test Phases III and IV)," IHTR 1315, Naval Ordnance Station, Indian Head, Maryland, April 15, 1990.

[9] Bement, L.J., Kayser, E.G., and Shimmel, M.L., "Service Life Evaluation of Rigid Explosive Transfer Lines," NASA Technical Paper 2143, August 1983.

[10] Hoffman, W.C., "Age and Service Life Performance Evaluation of Shuttle Overhead Window Crew Escape Components," JSC 26342, Johnson Space Center, April 1994.

[11] Rouch, L.L. and Maycock, J.N., "Explosive and Pyrotechnic Aging Demonstration," NASA CR-2622, February 1976.

[12] Greene, R.L., Stebbins, J.P., Smith, A.W., and Pullen, K.E., "Advanced Techniques for Determining Long-Term Compatibility of Materials with Propellants," Jet Propulsion Laboratory, D180-14839-2, December 1973.

[13] JANNAF Structures and Mechanical Behavior Subcommittee, "Tools Required for a Meaningful Service Life Prediction," CPIA Publication 506, March 1989.

[14] Hoffman, H.J., "Rocket Motor Service Life Prediction Methodology," CPTR 94-56, Chemical Propulsion Information Agency, November 1994.

[15] Energy Systems Test Area, Johnson Space Center, "Test Plan for HNS High Temperature Exposure Evaluation," TTA-TP-2P022, March 1995.

[16] Energy Systems Test Area, Johnson Space Center, "Test Procedure for HNS High Temperature Exposure Evaluation," TTA-T-2P022, April 1995.

[17] Kayser, E.G., "Chemical and Photographic Evaluation of Rigid Explosive Transfer Lines," NSWC TR 84-66, May 1984.

[18] Kayser, E.G., "A Chemical Characterization and Performance Study of Photodecomposed Hexanitrostilbene (HNS) and Hexanitrobibenzyl (HNBiB)," Naval Surface Warfare Center, Dahlgren, Virginia, NSWC TR 90-60, August 1989.

[19] Dieter, S. J., Memorandum to William Hoffman, NASA-Johnson Space Center, "Service Life Evaluation of HNSII," Naval Surface Warfare Center, Code 9120X, Indian Head, Maryland, dated April 29, 1996.

Appendix A
FCDC Lot WAG
Detonation Velocity Test Results
(meters/second)

1987 DLAT		1995 Control		1995 30@155F		1995 60@155F		1995 30@250F		1995 60@250F	
1	6421	2	6450	3	6458	4	6462	5	6449	6	6474
1	6439	2	6449	3	6471	4	6458	5	6448	6	6465
1	6442	2	6432	3	6484	4	6429	5	6442	6	6463
1	6438			3	6463	4	6407	5	6425	6	6453
1	6427			3	6438	4	6437			6	6402
1	6446			3	6352	4	6447			6	6459
1	6437										
1	6423										
1	6438										
1	6439										
1	6453										
1	6425										
1	6453										
1	6441										

Interpretation of headers: 1995 30@155F means tested in 1995 after 30 days' exposure to 155°F

Appendix B
6-Grains/ft MDF Lot 146441
Detonation Velocity Test Results
(meters/second)

DLAT 1966	1995 Control Group	30 Days @ 155F	60 Days @ 155F	30 Days @ 255F	60 Days @ 255F
6897					
6667					
6667		6834	6819	6803	6815
6780	6796	6848	6821	6816	6816
6667	6798	6808	6809	6815	6808
6897	6809	6816	6823		6838
6780	6802				
6897	6793				
6897	6848				
6897	6773				
6780	6848				
6897	6834				
6667	6848				
6667	6808				
6780	6816				
6780	6819				
6780	6821				
6667	6809				
6667	6823				
6780	6802				
6557	6816				
6667	6815				
6557	6816				
6667	6807				
6667	6837				
6667	6856				
6667	6822				
6667	6817				
6667	6819				
6667					
6667					
6780					
6667					
6780					
6667					
6780					

Appendix C
8-Grains/ft MDF Lot 69148102
Detonation Velocity Test Results
(meters/second)

DLAT 1972 Detonation Meters/Second	Control Group	30 Days @ 155F	60 Days @ 155F	30 Days @ 255F	60 Days @ 255F
6700	6743	6764	6777	6776	6756
6700	6793	6780	6781	6779	6782
6700	6809	6802	6769	6782	6770
6700	6733	6760	6784	6779	6760
6700	6751				
6700	6748				
6700	6775				
6700	6784				
6700	6773				
6700	6763				
6700	6755				
6700					
6700					
6700					
6700					
6700					
6700					
6700					
6700					
6700					

Appendix D
20-Grains/ft LSC Lot 68573012
Detonation Velocity Test Results
(meters/second)

DLAT Aug 1971	Control Group	30 Days @ 155F	60 Days @ 155F	30 Days @ 255F	60 Days @ 255F
6800	7003	6990	7007	7010	7002
6700	7004	7017	7011	7013	7011
6700	7015	7014	7000	6997	6997
6700	7004	7018	6994	7032	7012
6900					
6800					
6600					